PXIe-5632 Getting Started

2025-06-18

Contents

PXIe-5632 Getting Started Guide . . . 3
Electromagnetic Compatibility Guidelines . . . 3
Verifying the System Requirements . . . 4
Unpacking the Kit . . . 4
Verifying the Kit Contents . . . 5
Other Equipment . . . 5
Preparing the Environment . . . 6
Installing the Software . . . 7
Installing the PXIe-5632 . . . 8
Connecting Signals . . . 10
Direct Connections to the PXIe-5632 . . . 11
PXIe-5632 Front Panel . . . 11
Connector Care . . . 14
Configuring the PXIe-5632 in MAX . . . 15
Programming the PXIe-5632 . . . 16
NI-VNA Examples . . . 18
Making Uncalibrated Measurements with the PXIe-5632 . . . 18
Calibrating the PXIe-5632 . . . 19
Making Calibrated Measurements with the PXIe-5632 . . . 20
Troubleshooting . . . 20

PXIe-5632 Getting Started Guide

Note Before you begin, install and configure your chassis and controller.

This document explains how to install, configure, and test the PXIe-5632. The PXIe-5632 is a 8.5 GHz, 2-port vector network analyzer (VNA) with support for full S-parameter measurements. The PXIe-5632 ships with the NI-VNA instrument driver, which you can use to program the device.

To access PXIe-5632 documentation, navigate to **Start** » **All Programs** » **National Instruments** » **NI-VNA** » **Documentation**.

The specifications document for your device is installed with the driver software. Refer to ni.com/manuals for the most recent specifications for your device.

Caution The protection provided by this product may be impaired if it is used in a manner not described in this document.

Electromagnetic Compatibility Guidelines

This product was tested and complies with the regulatory requirements and limits for electromagnetic compatibility (EMC) stated in the product specifications. These requirements and limits are designed to provide reasonable protection against harmful interference when the product is operated in the intended operational electromagnetic environment.

This product is intended for use in industrial locations. However, harmful interference may occur in some installations, when the product is connected to a peripheral device or test object, or if the product is used in residential or commercial areas. To minimize interference with radio and television reception and prevent unacceptable performance degradation, install and use this product in strict accordance with the instructions in the product documentation.

Furthermore, any modifications to the product not expressly approved by NI could void your authority to operate it under your local regulatory rules.

> **Caution** To ensure the specified EMC performance, operate this product only with shielded cables and accessories.

> **Caution** To ensure the specified EMC performance, the length of all I/O cables must be no longer than 3 m (10 ft).

Verifying the System Requirements

To use the NI-VNA instrument driver, your system must meet certain requirements.

Refer to the product readme, which is available online on the driver software download page or at ni.com/manuals, for more information about minimum system requirements, recommended system, and supported application development environments (ADEs).

Unpacking the Kit

> **Notice** To prevent electrostatic discharge (ESD) from damaging the device, ground yourself using a grounding strap or by holding a grounded object, such as your computer chassis.

1. Touch the antistatic package to a metal part of the computer chassis.
2. Remove the device from the package and inspect the device for loose components or any other sign of damage.

   > **Notice** Never touch the exposed pins of connectors.

   > **Note** Do not install a device if it appears damaged in any way.

3. Visually ensure that the inner and outer center conductors of PORT 1 and PORT 2

are not damaged and are centered in the middle of the outer connector conductor.
4. Unpack any other items and documentation from the kit.

Store the device in the antistatic package when the device is not in use.

Verifying the Kit Contents

Figure 1. PXIe-5632 Kit Contents

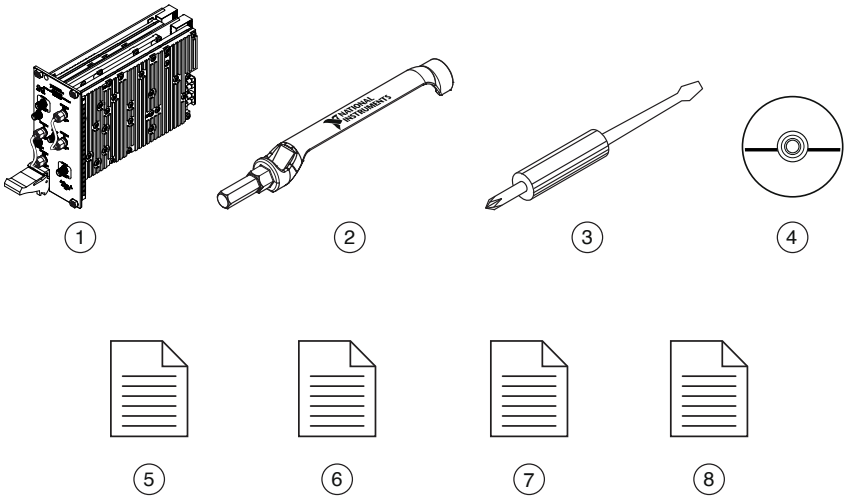

1. PXIe-5632 Vector Network Analyzer device
2. SMA Driver Bit, part number 190487A-01
3. 1/8 in. Combination Phillips/Flathead Screwdriver, part number 772006-01
4. NI-VNA Driver Software DVD
5. Read Me First: Safety and Electromagnetic Compatibility
6. Maintain Forced-Air Cooling Note to Users
7. NI PXIe-5632 Getting Started Guide (this document)
8. NI 5632 Calibration Certificate

Other Equipment

There are several required items not included in your device kit that you need to operate the PXIe-5632. Your application may require additional items not included in your kit to install or operate your device.

Required Items

- A PXI Express chassis and chassis documentation. The PXIe-1075 chassis is one available option for your device. For more information about compatible chassis options, refer to ni.com.

- An embedded controller or MXI controller system that meets the system requirements specified in this guide and chassis documentation.
- 0.9 N · m (8 in-lb) torque wrench

Optional Items

- PXI Chassis Slot Blocker kit (NI part number 199198-01)
- The following accessories available on the PXIe-5632 product page at ni.com/products:

Table 1. PXIe-5632 Accessories

Accessory	Part Number
Manual VNA Calibration Kit, K-Type	781587-01
Manual VNA Calibration Kit, N-Type	781588-01
Automatic VNA Calibration Kit, K-Type, Male-Female, 70 KHz to 9 GHz	782364-01
Phase-Equal Precision Adapter Kit, K-Type	781595-01
Phase-Equal Precision Adapter Kit, N-Type	781596-01
Precision Coaxial Cable, 0.6 m, K-Type, Male-Male	781607-01
Precision Coaxial Cable, 0.6 m, K-Type, Male-Female	781608-01
Precision Coaxial Cable, 0.6 m, K-Type Male to N-Type Male	781609-01
Precision Coaxial Cable, 0.6 m, K-Type Male to N-Type Female	781610-01
Calibrated 5/16" Torque Wrench, 8 in-lbs (0.9 Nm)	781615-01

Preparing the Environment

Ensure that the environment you are using the PXIe-5632 in meets the following

specifications.

Operating ambient temperature (IEC-60068-2-1, IEC-60068-2-2)	0 °C to 55 °C
Operating relative humidity (IEC-60068-2-56)	10% to 90%, noncondensing
Maximum altitude	2,000 m (800 mbar) (at 25 °C ambient temperature)
Pollution Degree	2

Indoor use only.

Notice Clean the hardware with a soft, nonmetallic brush or lint free cloth. Make sure that the hardware is completely dry and free from contaminants before returning it to service.

Note Refer to the ***PXIe-5632 Specifications*** at ni.com/manuals for complete specifications.

Installing the Software

You must be an Administrator to install NI software on your computer.

1. Install an ADE, such as LabVIEW or LabWindows™/CVI™.
2. Download the driver software installer from ni.com/downloads.
   NI Package Manager downloads with the driver software to handle the installation. Refer to the NI Package Manager Manual for more information about installing, removing, and upgrading NI software using NI Package Manager.
3. Follow the instructions in the installation prompts.

> **Note** Windows users may see access and security messages during installation. Accept the prompts to complete the installation.

4. When the installer completes, select **Restart** in the dialog box that prompts you to restart, shut down, or restart later.

Installing the PXIe-5632

> **Notice** To prevent damage to the PXIe-5632 caused by ESD or contamination, handle the module using the edges or the metal bracket.

1. Ensure the AC power source is connected to the chassis before installing the module.
   The AC power cord grounds the chassis and protects it from electrical damage while you install the module.
2. Power off the chassis.
3. Inspect the slot pins on the chassis backplane for any bends or damage prior to installation. Do not install a module if the backplane is damaged.
4. Remove the black plastic covers from all the captive screws on the module front panel.
5. Identify a supported slot in the chassis. The following figure shows the symbols that indicate the slot types.

Figure 2. Chassis Compatibility Symbols

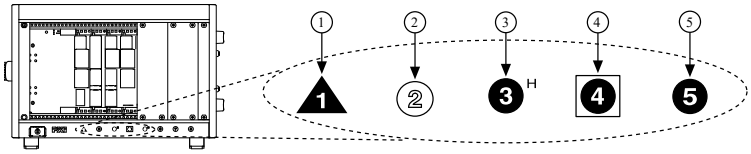

1. PXI Express System Controller Slot
2. PXI Peripheral Slot
3. PXI Express Hybrid Peripheral Slot
4. PXI Express System Timing Slot
5. PXI Express Peripheral Slot

The PXIe-5632 can be placed in PXI Express peripheral slots or PXI Express Hybrid peripheral slots.

6. Touch any metal part of the chassis to discharge static electricity.
7. Ensure that the ejector handle is in the downward (unlatched) position.
8. Place the module edges into the module guides at the top and bottom of the chassis. Slide the module into the slot until it is fully inserted.

Figure 1. Module Installation

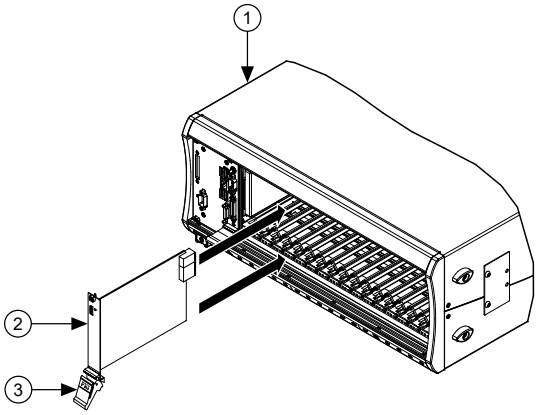

1. Chassis
2. Hardware Module
3. Ejector Handle in Downward (Unlatched) Position

9. Latch the module in place by pulling up on the ejector handle.
10. Secure the module front panel to the chassis using the front-panel mounting screws.

> **Note** Tightening the top and bottom mounting screws increases mechanical stability and also electrically connects the front panel to the chassis, which can improve the signal quality and electromagnetic performance.

11. Cover all empty slots using either filler panels (standard or EMC) or slot blockers with filler panels, depending on your application.

> **Note** For more information about installing slot blockers and filler panels, go to ni.com/r/pxiblocker.

12. Power on the chassis.

Related tasks:

- Installing the Software

Connecting Signals

Use appropriate shielded cables to connect signals to the NI vector network analyzer to ensure you achieve the best measurement accuracy possible.

Unsuitable cabling can adversely affect the vector error correction, producing unreliable and misleading results. Precision coaxial cables are available for purchase from ni.com. Ensure you take the following precautions when connecting signals to the PXIe-5632.

- Use phase-stable cables to make connections with the PXIe-5632. Phase-stable cables help ensure that the reference plane remains stable across shifts in cable position after calibration.
- Maintain placement of any accessories or cables that you attach to the PXIe-5632 to ensure that the reference plane remains constant between calibration and measurement.

> **Tip** You can also use phase-equal adapters after calibration to preserve the reference plane.

The following figure shows an example of the reference plane for a male and female connector.

Figure 4. Connector Reference Plane and Pin Depth

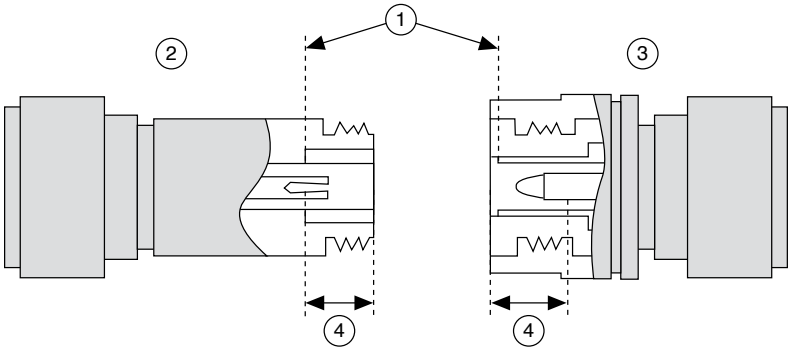

1. Reference Plane
2. Female Connector
3. Male Connector
4. Pin Depth

Related information:

- Refer to the NI Vector Network Analyzers Help for more information about reference planes and pin depth.

Direct Connections to the PXIe-5632

The PXIe-5632 is a precision RF instrument that is sensitive to ESD and transients. Ensure you take the following precautions when making direct connections to the PXIe-5632 to avoid damaging the device.

> **Notice** Apply external signals only while the PXIe-5632 is powered on. Applying external signals while the device is powered off may cause damage.

- Ensure you are properly grounded when manipulating cables or antennas connected to the PXIe-5632PORT 1 or PORT 2 connector.
- If you are using nonisolated devices, such as a nonisolated RF antenna, ensure the devices are maintained in a static-free environment.
- If you are using an active device, such as a preamplifier or switch routed to the PXIe-5632PORT 1 or PORT 2 connector, ensure that the device cannot generate signal transients greater than the RF and DC specifications of the PXIe-5632PORT 1 or PORT 2 connector.

PXIe-5632 Front Panel

The PXIe-5632 contains nine connectors and two LEDs.

Figure 1. PXIe-5632 Front Panel

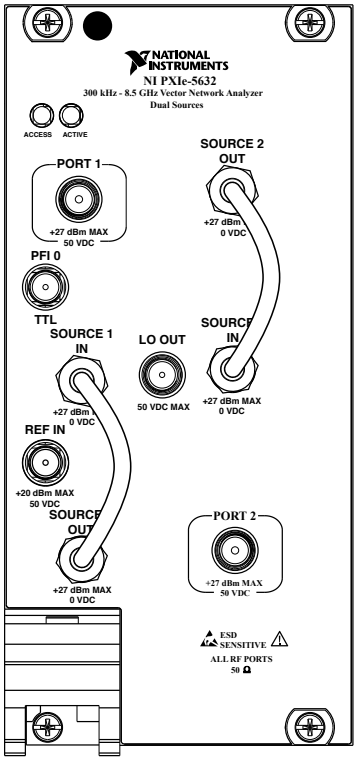

Table 2. Device Front Panel Icon Definitions

⚠	Refer to the user documentation for required maintenance measures to ensure user safety and/or preserve the specified EMC performance.
	The signal pins of this product's input/output ports can be damaged if subjected to ESD. To prevent damage, turn off power to the product before connecting cables and employ industry-standard ESD prevention measures during installation, maintenance, and operation.

Table 3. PXIe-5632 Front Panel Connectors

Connector	Use
PORT 1	Input/output terminal for PXIe-5632 measurements.
SOURCE 1 IN	Input terminal for the source 1 access loop.
SOURCE 2 IN	Input terminal for the source 2 access loop.
REF IN	Input terminal for an external reference signal

Connector	Use
	for the PXIe-5632.
PFI 0	Input terminal for an external trigger signal.
LO OUT	Output terminal for the PXIe-5632 local oscillator.
SOURCE 1 OUT	Output terminal for the source 1 access loop.
SOURCE 2 OUT	Output terminal for the source 2 access loop.
PORT 2	Input terminal for PXIe-5632 measurements.

Table 4. PXIe-5632 LEDs

LED	Indication
ACCESS	Indicates the basic hardware status of the PXIe-5632. OFF—The device is not yet functional. AMBER—The device is being accessed. ***Accessed*** means that the device is being communicated with over the PXI Express bus. GREEN—The device is ready to be programmed by NI-VNA. RED—The device has detected a hardware error, such as a hardware failure. The LED remains red until the error condition is removed.
ACTIVE	Indicates the state of the PXIe-5632. OFF—The device is not yet functional. AMBER—The device is armed and waiting for a trigger. GREEN—The device has received a Start Trigger. This state also indicates that the device is

LED	Indication
	making a measurement. RED—The device has detected a spurious error, such as when the PLL becomes unlocked. The LED remains red until the error condition is removed.

Connector Care

The PXIe-5632 is a high-accuracy precision laboratory device and should be carefully handled. Follow the precautions listed in this section when handling or connecting devices. Complying with these precautions guarantees longer component life and lower equipment downtime because of connector or device failure.

Tighten Connectors Without Rotating the Center Pin

Never tighten the connectors, adapters, or cables such that the center pin rotates. Damage occurs to the mating plane surfaces if the center pin rotates.

Avoid Touching Connectors with Bare Hands

Avoid touching connector mating planes with bare hands. Natural skin oils and microscopic dirt particles are difficult to remove.

Observe Pin Depth of Mating Connectors

Make sure to use the proper connectors to mate with the PXIe-5632. NI recommends that you use precision or instrument or metrology grade Type-K, 2.92 mm, 3.5 mm, or SMA connectors. Always check the point depth of a connector with a pin depth gauge before use to determine whether the pin depth is within the specified range.

Avoid Lateral Pressure

Never put lateral pressure on the center pin of the connector.

Always Torque Connectors to 0.9 N · m Using a Torque Wrench

Do not overtorque connectors; doing so may damage the connector center pin. Always use a 0.9 N · m (8 in-lb) torque wrench when tightening 2.92 mm, 3.5 mm, and SMA connectors. Finger-tighten N-type connectors. ***Never*** use pliers.

Avoid Mechanical Shock

Precision connectors are designed to withstand years of normal bench handling. Handle the connectors carefully and avoid dropping them. Mechanical shock significantly reduces their service life.

Avoid Applying Excessive Power

The PXIe-5632 is rated for a specific maximum continuous input power. Exceeding the maximum input power level permanently damages the internal components. Before making connections, verify the maximum input levels labeled below the ports on the module front panel.

Clean Connectors Carefully

Dirt and other contamination on the connector interfaces can affect the performance of the RF components. To clean the connector interfaces, use only pure isopropyl alcohol as a cleaning solvent. Do not use excessive amounts of alcohol, as this prolongs drying time. Apply the alcohol with a foam-tipped swab instead of cotton swabs, because the cotton can become lodged in the connector.

Use low-pressure compressed air to remove foreign particles and to dry the connector. After cleaning, verify that the center pin has not been bent or damaged.

Store Connectors Properly

When not in use, keep the connectors covered with the dust cap included in the PXIe-5632 shipping kit.

Configuring the PXIe-5632 in MAX

Use Measurement & Automation Explorer (MAX) to configure your NI hardware. MAX informs other programs about which NI hardware products are in the system and how they are configured. MAX is automatically installed with NI-VNA.

1. Launch MAX.
2. In the configuration tree, expand **Devices and Interfaces** to see the list of installed NI hardware.
   Installed modules appear under the name of their associated chassis.
3. Expand your **Chassis** tree item.
   MAX lists all modules installed in the chassis. Your default names may vary.

   > **Note** If you do not see your module listed, press <F5> to refresh the list of installed modules. If the module is still not listed, power off the system, ensure the module is correctly installed, and restart.

4. Record the identifier MAX assigns to the hardware. Use this identifier when programming the PXIe-5632.
5. Self-test the hardware by selecting the item in the configuration tree and clicking **Self-Test** in the MAX toolbar.
   The MAX self-test performs a basic verification of hardware resources.

Related tasks:

- What Should I Do if the PXIe-5632 Fails the Self-Test?
- What Should I Do if the PXIe-5632 Does Not Appear in MAX?

Programming the PXIe-5632

You can acquire data interactively with the PXIe-5632 using the NI-VNA soft front panel (SFP), or you can control the device programmatically using the NI-VNA instrument driver. You can then use NI-VNA to program the device in the ADE of your choice.

Table 5. PXIe-5632 Programming Options

Application Programming Interface (API)	Location	Description
NI-VNA SFP	Available from the Start menu at **Start** » **All Programs** » **National Instruments** » **NI-VNA** » **NI-VNA Soft Front Panel**.	A software representation of a traditional benchtop vector network analyzer.
NI-VNA Instrument Driver	LabVIEW—Available on the LabVIEW Functions palette at **Measurement I/O** » **NI-VNA**.	Features a set of functions and attributes that exercise all the functionality of the PXIe-5632, including configuration, control, and other device-specific functions.
	C or LabWindows/CVI—Available at `Program Files\IVI Foundation\IVI\Drivers\niVNA`.	
	Microsoft Visual C/C++—Use examples located in the ***<NIDocDir>***`\NI-VNA\examples` directory, where `<NIDocDir>` is one of the following directories: • Windows XP—`Documents and Settings\All Users\Shared Documents\National Instruments` • Windows 7/Vista—`Users\Public\Documents\National Instruments`	You can modify an NI-VNA C example to create an application with Microsoft Visual C/C++.

Related information:

- Refer to the Getting Started section of the NI Vector Network Analyzers Help for detailed instructions about how to acquire data in a specific ADE.

- Refer to the Creating an Application with Microsoft Visual C/C++ topic of the NI Vector Network Analyzers Help to manually add all required include and library files to the project.

NI-VNA Examples

Examples demonstrate the functionality of the device and serve as programming models and building blocks for your own applications. The NI Example Finder is a utility available for some ADEs that organizes examples into categories and allows you to easily browse and search installed examples. You can see descriptions and compatible hardware models for each example or see all the examples compatible with one particular hardware model.

Table 6. Locating NI-VNA Examples

ADE	How to Locate Examples
LabVIEW or LabWindows/CVI	Locate examples with the NI Example Finder. Within LabVIEW or LabWindows/CVI, select **Help** » **Find Examples** and navigate to **Hardware Input and Output** » **Modular Instruments**.
ANSI C or Microsoft Visual C/C++	Locate examples in the ***<NIDocDir>***`\NI-VNA\examples` directory, where `<NIDocDir>` is one of the following directories: • Windows 8/7/Vista—`Users\Public\Public Documents\National Instruments` • Windows XP—`Documents and Settings\All Users\Documents\National Instruments`

Making Uncalibrated Measurements with the PXIe-5632

Performing uncalibrated measurements with the PXIe-5632 can be useful for measuring device raw performance, custom measurement configuration, and other specialized measurements. You can perform uncalibrated measurements using the NI-VNA Soft Front Panel (SFP) or the NI-VNA driver API.

1. Prepare for the measurement.
   a. Warm up the device and the DUT as specified in the device specifications.
   b. Make signal connections as directed in the Connecting Signals section.
   c. Verify that the device is within the factory calibration interval.
2. Set up an initial, uncalibrated measurement.
   a. Preset the PXIe-5632.
   b. Configure the source parameters, including reference frequency, output power, and IF bandwidth.
   c. Connect the DUT to verify setup, cables, adapters, and operation.
   d. Select which S-parameter(s) to measure, and choose the display format.
3. Start the measurement.
4. Observe the uncalibrated response.
5. Remove the DUT.

Calibrating the PXIe-5632

Frequent calibration is particularly important for the PXIe-5632 because it allows you to remove certain errors from the actual measurements. Calibration removes errors caused by temperature, test environment, cables, and other test fixture differences. You can perform a calibration by using either the NI-VNA Soft Front Panel (SFP) or the NI-VNA driver API.

1. Choose whether you want to perform a new calibration or load data saved from a previous calibration.
2. To perform a new calibration, complete the following steps:
   a. Set the measurement parameters such as power, frequency, and number of points.
   b. Set IF bandwidth and averaging to minimize noise during calibration.
   c. Choose the proper calibration kit or input calibration standard definitions.

> **Tip** Keep the reference plane constant between your initial, uncalibrated measurement and your calibration setup. The reference plane is established at the location where the VNA connects to the AutoCal module or to the calibration standard. For example, your reference plane may be located at the end of an adapter connected to the end of a precision cable.

d. Calibrate manually or use automatic calibration.
e. Verify calibration quality using a known verification standard.

> **Note** Do not use the same calibration standards that you used for calibration to perform the verification.

f. Save the instrument state and calibration.

3. To load a saved calibration, complete the following steps:
   a. Select the calibration file.
   b. Ensure that the source parameters you specified in step 2b of the Making Uncalibrated Measurements with the PXIe-5632 section match those that were used in the calibration.
   Perform a new calibration if the settings do not match.

Related information:

- Refer to the NI Vector Network Analyzers Help for more information about reference planes.

Making Calibrated Measurements with the PXIe-5632

Performing calibrated measurements with the PXIe-5632 is useful when you need to minimize sources of error so that you can acquire the most accurate data for your test system. You can perform calibrated measurements using the NI-VNA Soft Front Panel (SFP) or the NI-VNA driver API.

1. Measure the DUT.
2. Ensure you are applying the proper correction from the Calibrating the PXIe-5632 section.
3. Measure and save the DUT parameters.
4. Verify that the calibrated measurement falls within your expected range.

Troubleshooting

If an issue persists after you complete a troubleshooting procedure, search our KnowledgeBase for additional information our technical support engineers create as

they answer common user questions and resolve unexpected issues.

What Should I Do if the PXIe-5632 Fails the Self-Test?

1. Restart the system.
2. Launch MAX, and perform the self-test again.
3. Power off the chassis.
4. Reinstall the failed module in a different slot.
5. Power on the chassis.
6. Perform the self-test again.

Related tasks:

- Configuring the PXIe-5632 in MAX

Why Is the ACCESS LED Off When the Chassis Is On?

The LEDs may not light until the device has been configured in MAX. Before proceeding, verify that the PXIe-5632 appears in MAX.

If the ACCESS LED fails to light after you power on the chassis, a problem may exist with the chassis power rails, a hardware module, or the LED.

> **Notice** Apply external signals only while the PXIe-5632 is powered on. Applying external signals while the device is powered off may cause damage.

1. Disconnect any signals from the module front panels.
2. Power off the chassis.
3. Remove the module from the chassis and inspect it for damage. Do not reinstall a damaged device.
4. Reinstall the module in a different chassis slot.
5. Power on the chassis.
6. Verify that the device appears in MAX.
7. Reset the device in MAX and perform a self-test.

What Should I Do if the PXIe-5632 Does Not Appear in MAX?

1. In the MAX configuration tree, expand **Devices and Interfaces**.
2. Expand the **Chassis** tree to see the list of installed hardware, and press <F5> to refresh the list.
3. If the module is still not listed, power off the system, ensure that all hardware is correctly installed, and restart the system.
4. Navigate to the Device Manager by right-clicking the Start button, and selecting **Device Manager**.
5. If you are using a PXI controller, verify that a **National Instruments** entry appears in the system device list and that the NI PXIe-5632 is enabled. If the device is disabled, right-click **NI PXIe-5632**, and select **Enable** from the shortcut menu. If you are using a MXI controller, right-click **PCI-to-PCI Bridge**, and select **Properties** from the shortcut menu to verify that the bridge is enabled.

Related tasks:

- Configuring the PXIe-5632 in MAX

© 2025 National Instruments Corporation.