COMPREHENSIVE SERVICES

We offer competitive repair and calibration services, as well as easily accessible documentation and free downloadable resources.

SELL YOUR SURPLUS

We buy new, used, decommissioned, and surplus parts from every NI series. We work out the best solution to suit your individual needs.

- Sell For Cash
- Get Credit
- Receive a Trade-In Deal

OBSOLETE NI HARDWARE IN STOCK & READY TO SHIP

We stock **New, New Surplus, Refurbished,** and **Reconditioned** NI Hardware.

APEX WAVES

Bridging the gap *between the manufacturer and your legacy test system.*

1-800-915-6216

www.apexwaves.com

sales@apexwaves.com

All trademarks, brands, and brand names are the property of their respective owners.

Request a Quote CLICK HERE **CB-50**

DAQ

DAQCard™-700 User Manual

Multifunction I/O Devices for the PCMCIA Bus

NATIONAL INSTRUMENTS™

December 2001 Edition
Part Number 320676D-01

Worldwide Technical Support and Product Information

ni.com

National Instruments Corporate Headquarters

11500 North Mopac Expressway Austin, Texas 78759-3504 USA Tel: 512 683 0100

Worldwide Offices

Australia 03 9879 5166, Austria 0662 45 79 90 0, Belgium 02 757 00 20, Brazil 011 3262 3599,
Canada (Calgary) 403 274 9391, Canada (Montreal) 514 288 5722, Canada (Ottawa) 613 233 5949,
Canada (Québec) 514 694 8521, Canada (Toronto) 905 785 0085, China (Shanghai) 021 6555 7838,
China (ShenZhen) 0755 3904939, Czech Republic 02 2423 5774, Denmark 45 76 26 00, Finland 09 725 725 11,
France 01 48 14 24 24, Germany 089 741 31 30, Greece 30 1 42 96 427, Hong Kong 2645 3186,
India 91 80 535 5406, Israel 03 6393737, Italy 02 413091, Japan 03 5472 2970, Korea 02 3451 3400,
Malaysia 603 9596711, Mexico 001 800 010 0793, Netherlands 0348 433466, New Zealand 09 914 0488,
Norway 32 27 73 00, Poland 0 22 528 94 06, Portugal 351 210 311 210, Russia 095 238 7139,
Singapore 2265886, Slovenia 386 3 425 4200, South Africa 11 805 8197, Spain 91 640 0085,
Sweden 08 587 895 00, Switzerland 056 200 51 51, Taiwan 02 2528 7227, United Kingdom 01635 523545

For further support information, see the *Technical Support Resources* appendix. To comment on the documentation, send e-mail to `techpubs@ni.com`.

© 1994, 2001 National Instruments Corporation. All rights reserved.

Important Information

Warranty

The DAQCard-700 is warranted against defects in materials and workmanship for a period of one year from the date of shipment, as evidenced by receipts or other documentation. National Instruments will, at its option, repair or replace equipment that proves to be defective during the warranty period. This warranty includes parts and labor.

The media on which you receive National Instruments software are warranted not to fail to execute programming instructions, due to defects in materials and workmanship, for a period of 90 days from date of shipment, as evidenced by receipts or other documentation. National Instruments will, at its option, repair or replace software media that do not execute programming instructions if National Instruments receives notice of such defects during the warranty period. National Instruments does not warrant that the operation of the software shall be uninterrupted or error free.

A Return Material Authorization (RMA) number must be obtained from the factory and clearly marked on the outside of the package before any equipment will be accepted for warranty work. National Instruments will pay the shipping costs of returning to the owner parts which are covered by warranty.

National Instruments believes that the information in this document is accurate. The document has been carefully reviewed for technical accuracy. In the event that technical or typographical errors exist, National Instruments reserves the right to make changes to subsequent editions of this document without prior notice to holders of this edition. The reader should consult National Instruments if errors are suspected. In no event shall National Instruments be liable for any damages arising out of or related to this document or the information contained in it.

EXCEPT AS SPECIFIED HEREIN, NATIONAL INSTRUMENTS MAKES NO WARRANTIES, EXPRESS OR IMPLIED, AND SPECIFICALLY DISCLAIMS ANY WARRANTY OF MERCHANTABILITY OR FITNESS FOR A PARTICULAR PURPOSE. CUSTOMER'S RIGHT TO RECOVER DAMAGES CAUSED BY FAULT OR NEGLIGENCE ON THE PART OF NATIONAL INSTRUMENTS SHALL BE LIMITED TO THE AMOUNT THERETOFORE PAID BY THE CUSTOMER. NATIONAL INSTRUMENTS WILL NOT BE LIABLE FOR DAMAGES RESULTING FROM LOSS OF DATA, PROFITS, USE OF PRODUCTS, OR INCIDENTAL OR CONSEQUENTIAL DAMAGES, EVEN IF ADVISED OF THE POSSIBILITY THEREOF. This limitation of the liability of National Instruments will apply regardless of the form of action, whether in contract or tort, including negligence. Any action against National Instruments must be brought within one year after the cause of action accrues. National Instruments shall not be liable for any delay in performance due to causes beyond its reasonable control. The warranty provided herein does not cover damages, defects, malfunctions, or service failures caused by owner's failure to follow the National Instruments installation, operation, or maintenance instructions; owner's modification of the product; owner's abuse, misuse, or negligent acts; and power failure or surges, fire, flood, accident, actions of third parties, or other events outside reasonable control.

Copyright

Under the copyright laws, this publication may not be reproduced or transmitted in any form, electronic or mechanical, including photocopying, recording, storing in an information retrieval system, or translating, in whole or in part, without the prior written consent of National Instruments Corporation.

Trademarks

CVI™, DAQCard™, LabVIEW™, Measurement Studio™, National Instruments™, NI™, and ni.com™ are trademarks of National Instruments Corporation.

Product and company names mentioned herein are trademarks or trade names of their respective companies.

Patents

For patents covering National Instruments products, refer to the appropriate location: **Help»Patents** in your software, the `patents.txt` file on your CD, or `ni.com/patents`.

WARNING REGARDING USE OF NATIONAL INSTRUMENTS PRODUCTS

(1) NATIONAL INSTRUMENTS PRODUCTS ARE NOT DESIGNED WITH COMPONENTS AND TESTING FOR A LEVEL OF RELIABILITY SUITABLE FOR USE IN OR IN CONNECTION WITH SURGICAL IMPLANTS OR AS CRITICAL COMPONENTS IN ANY LIFE SUPPORT SYSTEMS WHOSE FAILURE TO PERFORM CAN REASONABLY BE EXPECTED TO CAUSE SIGNIFICANT INJURY TO A HUMAN.

(2) IN ANY APPLICATION, INCLUDING THE ABOVE, RELIABILITY OF OPERATION OF THE SOFTWARE PRODUCTS CAN BE IMPAIRED BY ADVERSE FACTORS, INCLUDING BUT NOT LIMITED TO FLUCTUATIONS IN ELECTRICAL POWER SUPPLY, COMPUTER HARDWARE MALFUNCTIONS, COMPUTER OPERATING SYSTEM SOFTWARE FITNESS, FITNESS OF COMPILERS AND DEVELOPMENT SOFTWARE USED TO DEVELOP AN APPLICATION, INSTALLATION ERRORS, SOFTWARE AND HARDWARE COMPATIBILITY PROBLEMS, MALFUNCTIONS OR FAILURES OF ELECTRONIC MONITORING OR CONTROL DEVICES, TRANSIENT FAILURES OF ELECTRONIC SYSTEMS (HARDWARE AND/OR SOFTWARE), UNANTICIPATED USES OR MISUSES, OR ERRORS ON THE PART OF THE USER OR APPLICATIONS DESIGNER (ADVERSE FACTORS SUCH AS THESE ARE HEREAFTER COLLECTIVELY TERMED "SYSTEM FAILURES"). ANY APPLICATION WHERE A SYSTEM FAILURE WOULD CREATE A RISK OF HARM TO PROPERTY OR PERSONS (INCLUDING THE RISK OF BODILY INJURY AND DEATH) SHOULD NOT BE RELIANT SOLELY UPON ONE FORM OF ELECTRONIC SYSTEM DUE TO THE RISK OF SYSTEM FAILURE. TO AVOID DAMAGE, INJURY, OR DEATH, THE USER OR APPLICATION DESIGNER MUST TAKE REASONABLY PRUDENT STEPS TO PROTECT AGAINST SYSTEM FAILURES, INCLUDING BUT NOT LIMITED TO BACK-UP OR SHUT DOWN MECHANISMS. BECAUSE EACH END-USER SYSTEM IS CUSTOMIZED AND DIFFERS FROM NATIONAL INSTRUMENTS' TESTING PLATFORMS AND BECAUSE A USER OR APPLICATION DESIGNER MAY USE NATIONAL INSTRUMENTS PRODUCTS IN COMBINATION WITH OTHER PRODUCTS IN A MANNER NOT EVALUATED OR CONTEMPLATED BY NATIONAL INSTRUMENTS, THE USER OR APPLICATION DESIGNER IS ULTIMATELY RESPONSIBLE FOR VERIFYING AND VALIDATING THE SUITABILITY OF NATIONAL INSTRUMENTS PRODUCTS WHENEVER NATIONAL INSTRUMENTS PRODUCTS ARE INCORPORATED IN A SYSTEM OR APPLICATION, INCLUDING, WITHOUT LIMITATION, THE APPROPRIATE DESIGN, PROCESS AND SAFETY LEVEL OF SUCH SYSTEM OR APPLICATION.

Contents

About This Manual

Conventions vii
National Instruments Documentation viii

Chapter 1
Introduction

About the DAQCard-700 1-1
What You Need to Get Started 1-2
Software Programming Choices 1-2
NI-DAQ 1-2
National Instruments ADE Software 1-3
Custom Cabling 1-4
Unpacking 1-5
Safety Information 1-5

Chapter 2
Installing and Configuring the DAQCard-700

Installing the Software 2-1
Installing the Hardware 2-1
Configuring the DAQCard-700 2-3
Configuring Analog Input 2-3
Analog Input Mode 2-4
Configuring Digital I/O 2-5
Configuring Counters 2-5

Chapter 3
Connecting Signals

I/O Connector 3-1
Signal Connection Descriptions 3-2
Connecting Analog Input Signals 3-3
Types of Signal Sources 3-4
Measurement System Types 3-4
Input Configurations 3-5
Recommended Input Configurations 3-7
Single-Ended Connection Considerations 3-7
Differential Connection Considerations 3-9

Connecting Digital I/O Signals 3-13
Connecting Power 3-14
Connecting Timers 3-15
Data Acquisition Counter and Timing Connections 3-15
General-Purpose Counter and Timing Signal Connections 3-16

Chapter 4
Theory of Operation

Functional Overview 4-1
PCMCIA I/O Channel Interface Circuitry 4-3
Analog Input and Data Acquisition Circuitry 4-4
Analog Input Circuitry 4-5
Data Acquisition Timing Circuitry 4-6
Single-Channel Data Acquisition 4-7
Multichannel (Scanned) Data Acquisition 4-7
Data Acquisition Rates 4-7
Digital I/O Circuitry 4-8
Timing I/O Circuitry 4-9

Appendix A
Specifications

Appendix B
Differences between the PC-LPM-16 and the DAQCard-700

Appendix C
Common Questions

Appendix D
Technical Support Resources

Glossary

Index

About This Manual

This manual describes the mechanical and electrical aspects of the National Instruments (NI) DAQCard-700 and contains information concerning its installation and operation. The DAQCard-700 is a compact, low-cost, low-power analog input (AI), digital I/O (DIO), and timing I/O (TIO) card for computers that are equipped with a Type II PCMCIA socket.

Conventions

The following conventions appear in this manual:

<>

Angle brackets that contain numbers separated by an ellipsis represent a range of values associated with a bit or signal name—for example, DBIO<3..0>.

»

The » symbol leads you through nested menu items and dialog box options to a final action. The sequence **File»Page Setup»Options** directs you to pull down the **File** menu, select the **Page Setup** item, and select **Options** from the last dialog box.

This icon denotes a note, which alerts you to important information.

This icon denotes a caution, which advises you of precautions to take to avoid injury, data loss, or a system crash. When this symbol is marked on the product, refer to the *Safety Information* section of Chapter 1, *Introduction*, for precautions to take.

bold

Bold text denotes items that you must select or click on in the software, such as menu items and dialog box options. Bold text also denotes parameter names.

italic

Italic text denotes variables, emphasis, a cross reference, or an introduction to a key concept. This font also denotes text that is a placeholder for a word or value that you must supply.

`monospace`

Text in this font denotes text or characters that you should enter from the keyboard, sections of code, programming examples, and syntax examples. This font is also used for the proper names of disk drives, paths, directories, programs, subprograms, subroutines, device names, functions, operations, variables, filenames and extensions, and code excerpts.

PC	PC refers to all PC AT series computers with PCI or PXI bus unless otherwise noted.
PCMCIA	PCMCIA is an international standards body and trade association that promotes the interoperability of PC cards.
Platform	Text in this font denotes a specific platform and indicates that the text following it applies only to that platform.

National Instruments Documentation

The *DAQCard-700 User Manual* is one piece of the documentation set for the data acquisition (DAQ) system. You could have any of several types of manuals, depending on the hardware and software in the system. Use the manuals you have as follows:

- Hardware documentation—This documentation has detailed information about the DAQ hardware that plugs into or is connected to the computer. Use this documentation for hardware installation and configuration instructions, specification information about the DAQ hardware, and application hints.
- Software documentation—You may have both application software and NI-DAQ documentation. After you set up the hardware, use either the application software documentation or the NI-DAQ documentation to help you write your application. NI application software includes LabVIEW and Measurement Studio. If you have a large, complicated system, it is worthwhile to look through the software documentation before you configure the hardware.
- Accessory installation guides or manuals—If you are using accessory products, read the cable assembly installation guides. They explain how to physically connect the relevant pieces of the system. Consult these guides when you make the connections.

1

Introduction

This chapter discusses what you need to get started, optional software, optional equipment, how to unpack the DAQCard-700, and safety information for using the device.

About the DAQCard-700

The DAQCard-700 is a low-cost, low-power AI, DIO, and TIO card for computers equipped with a Type II PCMCIA slot. The card has the following features:

- A 12-bit, successive-approximation A/D converter (ADC) with 16 single-ended or 8 differential analog inputs
- 16 DIO channels: eight lines of TTL-compatible digital input and eight lines of digital output
- Two 16-bit counter/timer channels for TIO
- A MSM82C54 counter/timer integrated circuit, which provides three integrated counter/timers
- An optional 50-pin I/O connector, which enables you to easily connect all the analog, digital, and timing signals to the card

The DAQCard-700 is fully software configurable and factory calibrated.

The low power consumption of the DAQCard-700 makes the card ideal for portable computers, making remote data acquisition more practical. The card requires very little power when operating and has a standby mode that uses even less power, thus extending the computer battery life.

In addition, the low cost of a system based on the DAQCard-700 makes it ideal for laboratory work. The multiple-channel AI capability is useful in signal analysis and data logging. The 12-bit ADC is suited for high-resolution applications such as chromatography, temperature measurement, and DC voltage measurement. The 16 TTL-compatible DIO lines can be used for switching external devices such as transistors and solid-state relays, for reading the status of external digital logic, and for generating interrupts. The counter/timers can be used to synchronize events, generate pulses, and measure frequency and time.

Detailed specifications of the DAQCard-700 are in Appendix A, *Specifications*.

What You Need to Get Started

To set up and use the DAQCard-700, you will need the following:

- ❑ DAQCard-700
- ❑ DAQCard-700 I/O cable
- ❑ *DAQCard-700 User Manual*
- ❑ One of the following software packages and documentation:
  - – LabVIEW **(for Windows or Mac OS)**
  - – Measurement Studio **(for Windows)**
- ❑ NI-DAQ **(for PC compatibles or Mac OS)**
- ❑ The computer

Software Programming Choices

When programming the National Instruments DAQ hardware, you can use NI application development environment (ADE) software or other ADEs. In either case, you use NI-DAQ.

NI-DAQ

NI-DAQ ships with the DAQCard-700 and has an extensive library of functions that you can call from your ADE. These functions allow you to use all the features of the DAQCard-700.

NI-DAQ carries out many of the complex interactions, such as programming interrupts, between the computer and the DAQ hardware. NI-DAQ maintains a consistent software interface among its different versions so that you can change platforms with minimal modifications to your code. Whether you use LabVIEW, Measurement Studio, or other ADEs, your application uses NI-DAQ, as illustrated in Figure 1-1.

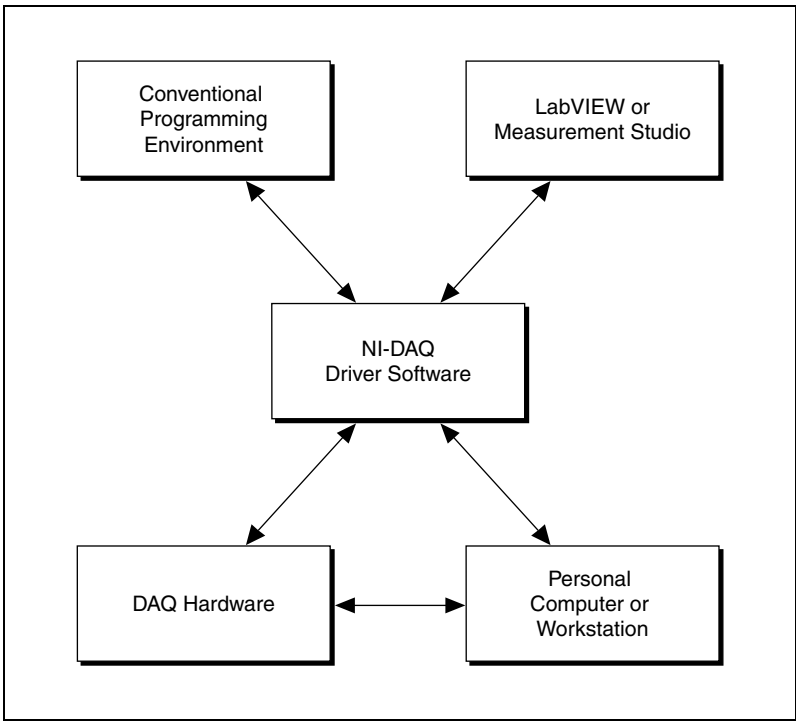

Figure 1-1. The Relationship Between the Programming Environment, NI-DAQ, and Your Hardware

To download a free copy of the most recent version of NI-DAQ, click **Download Software** at `ni.com`.

National Instruments ADE Software

LabVIEW features interactive graphics, a state-of-the-art interface, and a powerful graphical programming language. The LabVIEW Data Acquisition VI Library, a series of virtual instruments (VIs) for using LabVIEW with National Instruments DAQ hardware, is included with LabVIEW.

Measurement Studio, which includes LabWindows/CVI, tools for Visual C++, and tools for Visual Basic, is a development suite that allows you to use ANSI C, Visual C++, and Visual Basic to design your test and measurement software. For C developers, Measurement Studio includes LabWindows/CVI, a fully integrated ANSI C application development environment that features interactive graphics and the LabWindows/CVI Data Acquisition and Easy I/O libraries. For Visual Basic developers,

Measurement Studio features a set of ActiveX controls for using National Instruments DAQ hardware. These ActiveX controls provide a high-level programming interface for building virtual instruments. For Visual C++ developers, Measurement Studio offers a set of Visual C++ classes and tools to integrate those classes into Visual C++ applications. The libraries, ActiveX controls, and classes are available with Measurement Studio and NI-DAQ.

Using LabVIEW or Measurement Studio greatly reduces the development time for your data acquisition and control application.

Custom Cabling

NI offers two cables, the PR-50-50F and the PR-50-50M, and one cable termination accessory, the CB-50, for use with the DAQCard-700. The CB-50 kit includes a terminated, 50-conductor, flat ribbon cable and a connector block. You can attach signal input and output wires to screw terminals on the connector block and therefore to the DAQCard-700 I/O connector.

The CB-50 is useful for the initial prototyping of an application or in situations in which the DAQCard-700 interconnections are frequently changed. After you develop a final field wiring scheme, however, you may want to develop your own cable. This section contains information and guidelines for the design of custom cables.

The PR-50-50M terminates in a 50-pin, male ribbon cable header connector, and the PR-50-50F terminates in a 50-pin, female ribbon cable socket connector. The mating connector for each cable is a 50-position, polarized, ribbon-socket header. For the PR-50-50M, the mating connector has strain relief. NI uses a polarized (keyed) connector for each cable to prevent inadvertent upside-down connections to the DAQCard-700.

The PCMCIA I/O cable connector, like the card connector attached to the card itself, is a custom-designed part. It is only available as part of the PR-50-50 cable assembly.

Unpacking

The DAQCard-700 is shipped in an antistatic package to prevent electrostatic damage to the device.

Caution To avoid electrostatic damage to the DAQCard-700, *never* touch the exposed pins of connectors.

Because the DAQCard-700 is enclosed in a fully shielded case, no additional electrostatic precautions are necessary.

Remove the DAQCard-700 from the package and inspect the device for loose components or any sign of damage. Notify NI if the DAQCard-700 appears damaged in any way. Do *not* install a damaged device into your computer.

Store the DAQCard-700 in the antistatic envelope when not in use.

Safety Information

The following section contains important safety information that you *must* follow when installing and using the product.

Do *not* operate the product in a manner not specified in this document. Misuse of the product can result in a hazard. You can compromise the safety protection built into the product if the product is damaged in any way. If the product is damaged, return it to NI for repair.

Do *not* substitute parts or modify the product except as described in this document. Use the product only with the chassis, modules, accessories, and cables specified in the installation instructions. You *must* have all covers and filler panels installed during operation of the product.

Do *not* operate the product in an explosive atmosphere or where there may be flammable gases or fumes. Operate the product only at or below the pollution degree stated in Appendix A, *Specifications*. Pollution is foreign matter in a solid, liquid, or gaseous state that can reduce dielectric strength or surface resistivity. The following is a description of pollution degrees:

- Pollution degree 1 means no pollution or only dry, nonconductive pollution occurs. The pollution has no influence.

- Pollution degree 2 means that only nonconductive pollution occurs in most cases. Occasionally, however, a temporary conductivity caused by condensation must be expected.
- Pollution degree 3 means that conductive pollution occurs, or dry, nonconductive pollution occurs that becomes conductive due to condensation.

Clean the product with a soft nonmetallic brush. Make sure that the product is completely dry and free from contaminants before returning it to service.

You *must* insulate signal connections for the maximum voltage for which the product is rated. Do *not* exceed the maximum ratings for the product. Remove power from signal lines before connecting them to or disconnecting them from the product.

Operate this product only at or below the installation category stated in Appendix A, *Specifications*.

The following is a description of installation categories:

- Installation category I is for measurements performed on circuits not directly connected to MAINS[1]. This category is a signal level such as voltages on a printed wire board (PWB) on the secondary of an isolation transformer.

  Examples of installation category I are measurements on circuits not derived from MAINS and specially protected (internal) MAINS-derived circuits.

- Installation category II is for measurements performed on circuits directly connected to the low-voltage installation. This category refers to local-level distribution such as that provided by a standard wall outlet.

  Examples of installation category II are measurements on household appliances, portable tools, and similar equipment.

- Installation category III is for measurements performed in the building installation. This category is a distribution level referring to hardwired equipment that does not rely on standard building insulation.

  Examples of installation category III include measurements on distribution circuits and circuit breakers. Other examples of installation category III are wiring including cables, bus-bars,

[1] MAINS is defined as the electricity supply system to which the equipment concerned is designed to be connected either for powering the equipment or for measurement purposes.

junction boxes, switches, socket outlets in the building/fixed installation, and equipment for industrial use, such as stationary motors with a permanent connection to the building/fixed installation.

- Installation category IV is for measurements performed at the source of the low-voltage (<1,000 V) installation.

  Examples of category IV are electric meters, and measurements on primary overcurrent protection devices and ripple-control units.

Below is a diagram of a sample installation.

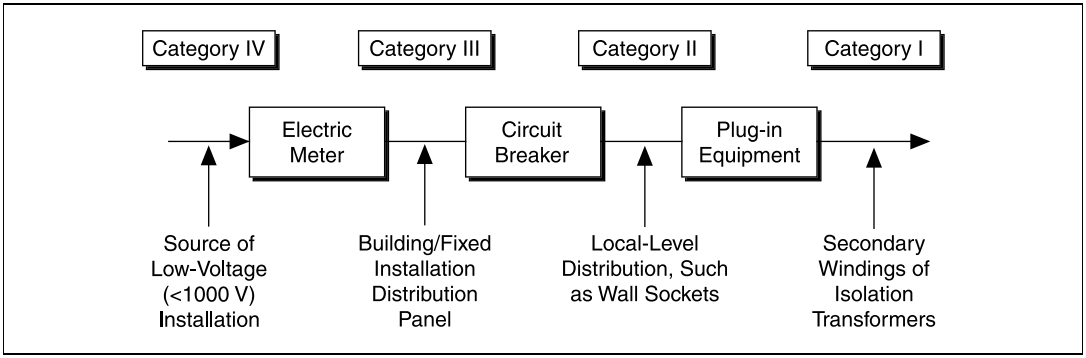

2

Installing and Configuring the DAQCard-700

This chapter describes how to install and configure the DAQCard-700.

Installing the Software

Install the ADE, such as LabVIEW or Measurement Studio, according to the instructions on the CD and the release notes. After you have installed the ADE, install NI-DAQ according to the instructions on the CD and the *DAQ Quick Start Guide* included with the DAQCard-700.

Note It is important to install NI-DAQ before installing the DAQCard-700 to ensure that the DAQCard-700 is properly detected.

Installing the Hardware

The following are general installation instructions. Consult the computer user manual or technical reference manual for specific instructions and warnings about installing new devices. Refer to Figure 2-1 when installing the DAQCard-700.

1. Power off the computer.

Note You must have Card & Socket Services 2.0 or later on the computer.
The DAQCard-700 requires a 32-byte I/O address window and one interrupt level.

2. Insert the DAQCard-700 in any available Type II PC Card slot until the connector is firmly seated. The DAQCard-700 has two connectors—a 68-pin PCMCIA bus connector on one end and a 50-pin I/O connector on the other end.

Note If the computer supports hot swapping, you may insert or remove the DAQCard-700 at any time, whether the computer is powered on or off.

3. Visually verify the installation by making sure that the DAQCard-700 is fully inserted into the slot.
4. Attach the DAQCard-700 I/O cable.

Note Be careful not to put strain on the I/O cable when inserting it into and removing it from the DAQCard-700. Always grasp the cable by the connector you are plugging or unplugging. *Never* pull directly on the I/O cable to unplug it from the DAQCard-700.

5. Plug in and power on the computer.

The DAQCard-700 is now installed. You are now ready to configure the hardware and software and to make the appropriate connections to the I/O connector cable as described in Chapter 3, *Connecting Signals*.

Figure 2-1 shows an example of a typical configuration.

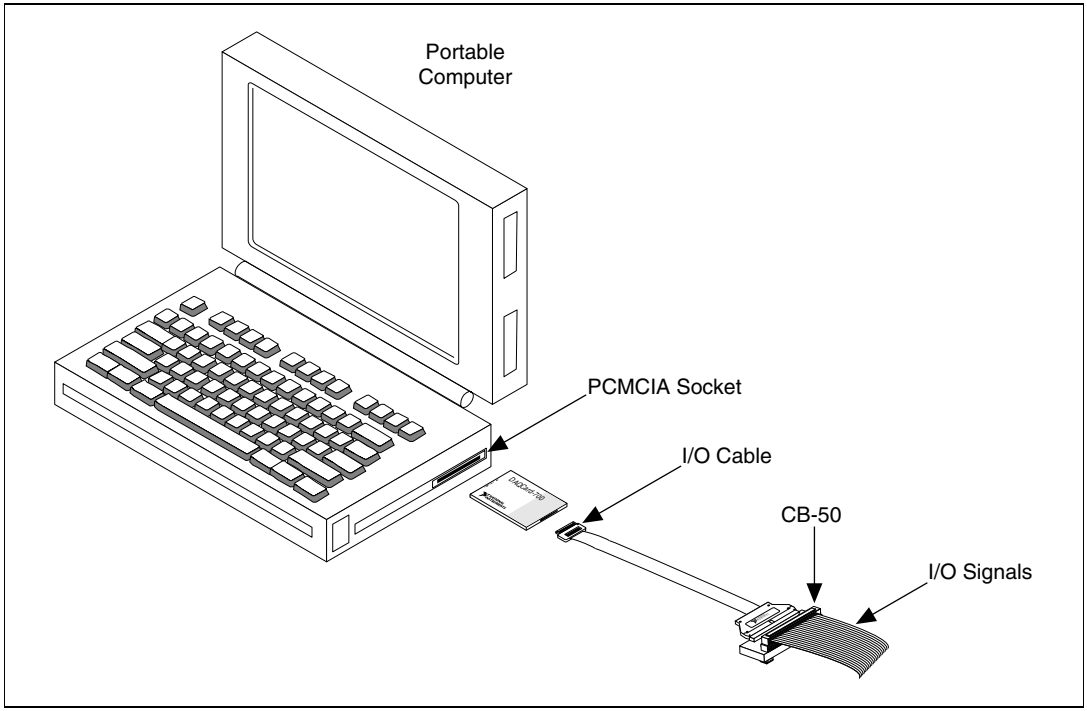

Figure 2-1. A Typical Configuration for the DAQCard-700

Configuring the DAQCard-700

Because of the standard NI architecture for data acquisition, the DAQCard-700 is completely software configurable.

Data acquisition-related configuration, which you must perform, includes settings such as AI coupling and range. You can modify these settings using NI-DAQ or application-level software, such as LabVIEW and Measurement Studio.

To configure the device in Measurement & Automation Explorer (MAX), refer to the *DAQ Quick Start Guide* or to the *NI-DAQ Function Reference Help* file.

Configuring Analog Input

At startup, the DAQCard-700 defaults to the following configuration:

- Referenced single-ended (RSE) input mode
- ±10 V AI range

Table 2-1 lists the available AI configurations for the DAQCard-700 and shows the default settings.

Table 2-1. Analog I/O Settings

Parameter	Configuration
Analog Input Polarity	Bipolar—±10 V (default setting) Bipolar—±5 V Bipolar—±2.5 V
Analog Input Mode	RSE (default setting) Differential (DIFF)

The AI circuitry is software configurable.

Caution Connections, including power signals to ground and vice versa, that exceed any of the maximum signal ratings on the DAQCard-700 can result in damage to the DAQCard-700. NI is *not* liable for any injuries or damage resulting from incorrect signal connections.

Analog Input Mode

The DAQCard-700 has two input modes: RSE and DIFF. RSE input mode provides 16 channels. DIFF input mode provides eight channels. Table 2-2 describes these modes.

Table 2-2. Analog Input Modes for the DAQCard-700

Analog Input Modes	Description
RSE	Referenced single-ended mode provides 16 single-ended inputs referenced to analog ground (default setting).
DIFF	Differential mode provides eight differential inputs with the positive (+) input of the instrumentation amplifier tied to channels 0, 1, 2, 3, 4, 5, 6, or 7 and the negative (–) input tied to channels 8, 9, 10, 11, 12, 13, 14, or 15, respectively, thus choosing channel pairs (0, 8), (1, 9), (2, 10), (3, 11), (4, 12), (5, 13), (6, 14), or (7, 15).

While reading the following paragraphs, you may find it helpful to refer to the *Connecting Analog Input Signals* section of Chapter 3, *Connecting Signals*, which contains diagrams showing the signal paths for the two modes. These two modes are software-selectable.

RSE Input Mode (16 Channels, Default Setting)

RSE input mode means that all input signals are referenced to a common ground point that is also tied to the DAQCard-700 AI ground. The RSE configuration is useful for measuring floating signal sources. See the *Types of Signal Sources* section of Chapter 3, *Connecting Signals*, for more information. With this input configuration, the DAQCard-700 can monitor 16 different AI channels.

Considerations for using the RSE input mode are discussed in Chapter 3, *Connecting Signals*. Notice that in this mode, the return path of the signal is analog ground at the connector through the AIGND pin.

DIFF Input Mode (Eight Channels)

DIFF input mode means that each input signal has its own reference, and the difference between each signal and its reference is measured. The signal and its reference are each assigned an input channel.

Considerations for using DIFF input mode are discussed in Chapter 3, *Connecting Signals*. Notice that the signal return path is through the negative terminal of the instrumentation amplifier and through channel 8, 9, 10, 11, 12, 13, 14, or 15, depending on which channel pair you select.

Configuring Digital I/O

The DAQCard-700 always uses one 8-bit digital output port and one 8-bit digital input port.

Configuring Counters

You can use the MSM82C54 for general-purpose applications, such as pulse and square wave generation, event counting, and pulse-width, time-lapse, and frequency measurements. For information about configuring the MSM82C54, refer to the *Connecting Timers* section of Chapter 3, *Connecting Signals*.

3

Connecting Signals

This chapter describes the DAQCard-700 I/O connector signals and typical cable setups.

I/O Connector

Figure 3-1 shows the pin assignments for the DAQCard-700 I/O connector. This connector is attached to the ribbon cable that extends from the PCMCIA slot when the card is installed and the cable is connected.

Caution Connections, including power signals to ground and vice versa, that exceed any of the maximum signal ratings on the DAQCard-700 can result in damage to the DAQCard-700. NI is *not* liable for any injuries or damage resulting from incorrect signal connections.

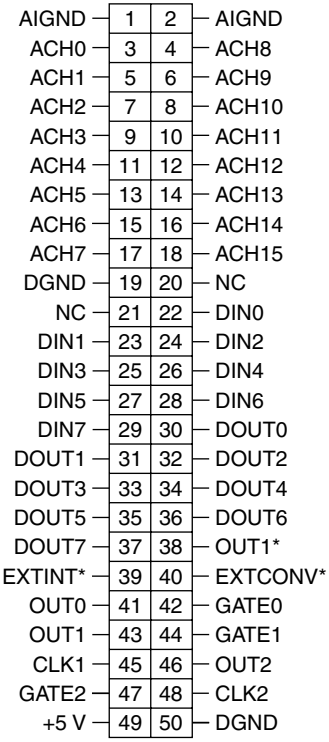

Figure 3-1. DAQCard-700 I/O Connector Pin Assignments

Signal Connection Descriptions

Pin	Signal Name	Direction	Description
1–2	AIGND	—	Analog Input Ground—These pins are connected to the AI ground signal.
3–18	ACH<0..15>	Input	Analog Input Channels 0 through 15—These channels are available in single-ended mode.
19	DGND	—	Digital Ground—This pin is connected to the digital ground signal.
20–21	NC	—	Not Connected—These pins are not connected.
22–29	DIN<0..7>	Input	Input Digital Data Lines 0 through 7—DIN7 is the MSB (most significant bit), DIN0 the LSB (least significant bit).

Pin	Signal Name	Direction	Description
30–37	DOUT<0..7>	Output	Output Digital Data Lines 0 through 7—DOUT7 is the MSB, DOUT0 the LSB.
38	OUT1*	Output	Counter 1 Output—This pin is the inversion of counter 1 output.
39	EXTINT*	Input	External Interrupt—This pin is used for input of the external interrupt signal.
40	EXTCONV*	Input	External Control—This pin is used for input of the external control signal to trigger A/D conversions.
41	OUT0	Output	Counter 0 Output—This pin is the output of counter 0.
42	GATE0	Input	Counter 0 Gate Input—This pin is the gate input for counter 0.
43	OUT1	Output	Counter 1 Output—This pin is the output of counter 1.
44	GATE1	Input	Counter 1 Gate Input—This pin is the gate input for counter 1.
45	CLK1	Input	Counter 1 Clock Input—This pin is the clock input for counter 1.
46	OUT2	Output	Counter 2 Output—This pin is the output of counter 2.
47	GATE2	Input	Counter 2 Gate Input—This pin is the gate input for counter 2.
48	CLK2	Input	Counter 2 Clock Input—This pin is the clock input for counter 2.
49	+5 V	Output	+5 Volts—This pin provides +5 VDC. The +5 V supply is fused at 1 A, which is the maximum current available.
50	DGND	—	Digital Ground—This pin is connected to the digital ground signal.
* Indicates that the signal is active low.			

The connector pins can be grouped into AI signal pins, DIO signal pins, and TIO signal pins. Signal connection guidelines for each of these groups are included in the following pages.

Connecting Analog Input Signals

Pins 1 through 18 are AI signal pins for the ADC. Pins 1 and 2, named AIGND, are an analog common signal. You can use these pins for a general analog power ground tie to the DAQCard-700. Pins 3 through 18 are the ACH<0..15> signal pins. These pins are tied to the AI channels of the DAQCard-700 through 4.7 kΩ series resistors. These resistors limit the input current to the multiplexer. Refer to Appendix A, *Specifications*, for input ranges and maximum ratings for the analog inputs, ACH<0..15>.

Caution Exceeding the input signal range distorts input signals. Exceeding the maximum input voltage rating may damage the DAQCard-700 card and the computer. NI is *not* liable for any damage resulting from such signal connections.

Types of Signal Sources

When configuring the input mode of the DAQCard-700 and making signal connections, first determine whether the signal source and the measurement system are floating or ground referenced. The two signal source types are described as follows, and the types of measurement systems are described in later sections.

Ground-Referenced Signal Sources

A ground-referenced signal source is one that is connected to the building system ground. Nonisolated outputs of instruments and devices that plug into the building power system fall into this category.

The difference in ground potential between two instruments connected to the same building power system is typically between 1 and 100 mV but can be much higher if power-distribution circuits are improperly connected. The connection instructions described later in this chapter for grounded signal sources are designed to eliminate this ground potential difference from the measured signal.

Floating Signal Sources

A floating, or nonreferenced, signal source is one that is not connected in any way to the building ground system and has instead an isolated ground-reference point. Some examples of floating signal sources are outputs of transformers, thermocouples, battery-powered devices, optical isolator outputs, and isolation amplifiers. The ground reference of a floating signal must be tied to the DAQCard-700 AI ground to establish a local or onboard reference for the signal. Otherwise, the measured input signal varies or appears to float. An instrument or device that provides an isolated output falls into the floating signal source category.

Measurement System Types

In addition to determining the signal source type, you must also determine whether the measurement system is ground-referenced or floating. These two measurement system types are described below. Depending on the power connection, a portable computer can represent either a ground-referenced or floating measurement system. If a portable computer is entirely battery powered, it is a floating system. If it is operated from an

AC/DC wall adapter, it may be ground referenced, depending on the connection. You should determine from the computer documentation whether any of the power connections are tied to the building power system ground.

Ground-Referenced Measurement System

A ground-referenced measurement system is one that is connected in some way to the building system ground. Instruments that plug into the building power system fall into this category.

Floating Measurement System

A floating, or nonreferenced, measurement system is one that is not connected in any way to the building ground system but rather has an isolated ground-reference point. Some examples of floating measurement systems are battery-powered instruments, instruments powered with a nonground-referenced power adapter, and instruments with differential inputs. A floating measurement system will float to the level of the signals being measured.

Input Configurations

To measure different types of input signals, you can configure the DAQCard-700 for one of two input modes—DIFF or RSE. These two modes can be implemented by changing the configuration of the instrumentation amplifier onboard the DAQCard-700. Figure 3-2 shows a diagram of the DAQCard-700 instrumentation amplifier.

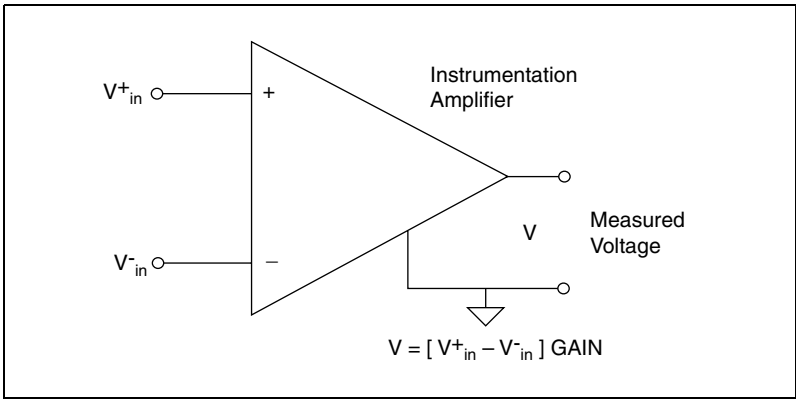

Figure 3-2. DAQCard-700 Instrumentation Amplifier

The DAQCard-700 instrumentation amplifier applies common-mode voltage rejection and presents a high-input impedance to the AI signals connected to the DAQCard-700. Signals are routed to the positive and negative inputs of the instrumentation amplifier through input multiplexers on the DAQCard-700. The instrumentation amplifier converts two input signals to a signal that is the difference between the two input signals multiplied by the gain setting of the amplifier. The amplifier output voltage is referenced to the DAQCard-700 ground. The DAQCard-700 ADC measures this output voltage when it performs A/D conversions.

Single-Ended Mode (RSE)

Although the instrumentation amplifier on the DAQCard-700 is actually bypassed in RSE input mode, the effect of this mode is the same as if signals connected to ACH<0..15> were routed to the positive terminal of the instrumentation amplifier and the negative terminal of the instrumentation amplifier were connected to the analog ground reference of the DAQCard-700. Thus, the voltage measured by the DAQCard-700 in RSE input mode is the difference between an input signal and the DAQCard-700 analog ground reference.

Differential Mode (DIFF)

In DIFF input mode, signals connected to ACH<0..7> are routed to the positive input of the instrumentation amplifier, and signals connected to ACH<8..15> are routed to the negative input of the instrumentation amplifier. Thus, the voltage measured by the DAQCard-700 in DIFF input mode is the difference between two of the input signals.

Recommended Input Configurations

The following sections discuss the use of RSE and DIFF measurements and considerations for measuring both floating and ground-referenced signal sources. Table 3-1 summarizes the recommended input configurations for both signal source types.

Table 3-1. Recommended Input Configurations for Ground-Referenced and Floating Measurement Systems

System Type	Type of Signal	Recommended Input Configurations
Ground-referenced system, such as a desktop computer	Ground referenced (nonisolated outputs, plug-in instruments)	DIFF
	Floating (batteries, thermocouples, isolated outputs)	DIFF with bias resistors RSE
Floating system, such as a battery-powered computer	Ground referenced (nonisolated outputs, plug-in instruments)	DIFF with bias resistors RSE
	Floating (batteries, thermocouples, isolated outputs)	DIFF with bias resistors RSE

Single-Ended Connection Considerations

Single-ended connections are those in which all DAQCard-700 AI signals are referenced to one common ground. The input signals are tied to the positive input of an operational amplifier that is referenced to the common ground point.

When the DAQCard-700 is configured for RSE input mode, 16 AI channels are available. You can use single-ended input connections when the following criteria are met by all input signals:

- Input signals are high level (greater than 1 V).
- Leads connecting the signals to the DAQCard-700 are less than 15 ft.
- All input signals share a common reference signal (at the source).

If any of the preceding criteria are not met, use the DIFF input mode.

The RSE input mode is referenced, but you can use this mode for nonreferenced signal sources. In addition, if the computer using the

DAQCard-700 is not ground referenced, you can use this mode for ground-referenced signal sources.

Figure 3-3 shows how to connect a signal source to a DAQCard-700 in RSE input mode. When you connect grounded signal sources to a DAQCard-700 in a ground-referenced computer, carefully observe the polarity to avoid shorting the signal source output. A laptop operating from a battery is not grounded. A laptop powered from an AC/DC adapter may or may not be grounded.

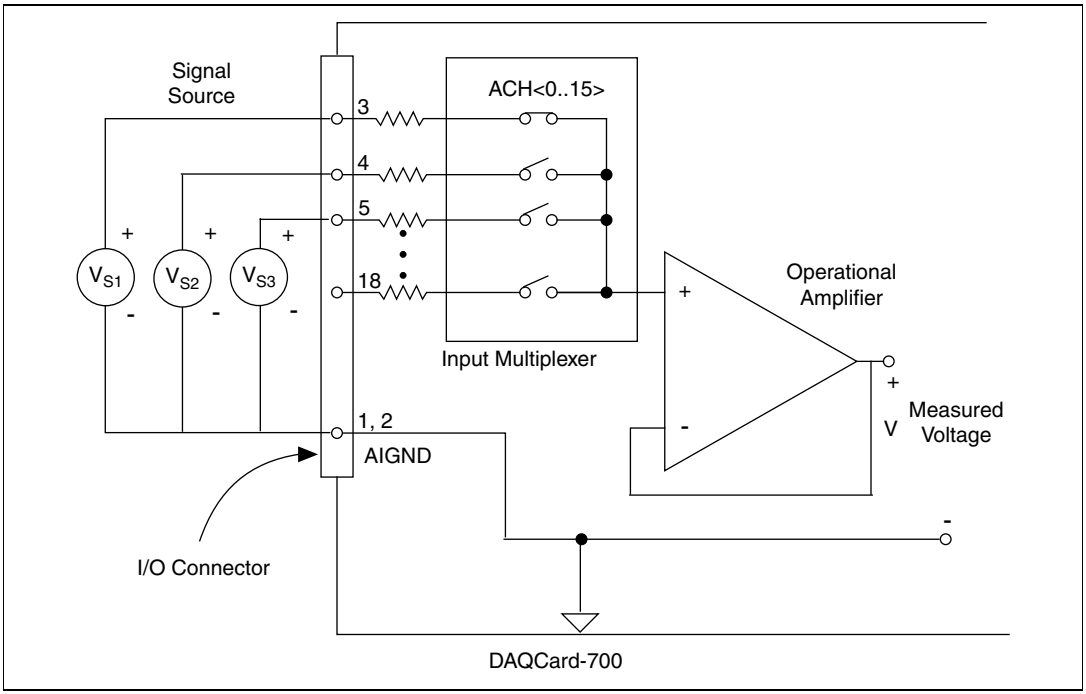

Figure 3-3. Single-Ended Analog Input Signal Connections

Differential Connection Considerations

Differential connections are those in which each DAQCard-700 AI signal has its own reference signal or signal return path. These connections are available when the DAQCard-700 is configured in the DIFF mode. Each input signal is tied to the positive input of the instrumentation amplifier, and its reference signal, or return, is tied to the negative input of the instrumentation amplifier.

When the DAQCard-700 is configured for DIFF input mode, each signal uses two of the multiplexer inputs—one for the signal and one for its reference signal. Therefore, only eight AI channels are available when using DIFF input mode. DIFF input mode should be used when any of the following conditions are present:

- Input signals are low-level (less than 1 V).
- Leads connecting signals to the DAQCard-700 are greater than 15 ft.
- Any of the input signals requires a separate ground reference point or return signal.
- The signal leads travel through noisy environments.

Differential signal connections reduce noise pickup and increase common-mode noise rejection. With these connections, input signals can float within the common-mode limits of the input instrumentation amplifier.

Differential Connections for Grounded Signal Sources

Figure 3-4 shows how to connect a ground-referenced signal source to a DAQCard-700 card configured for DIFF input.

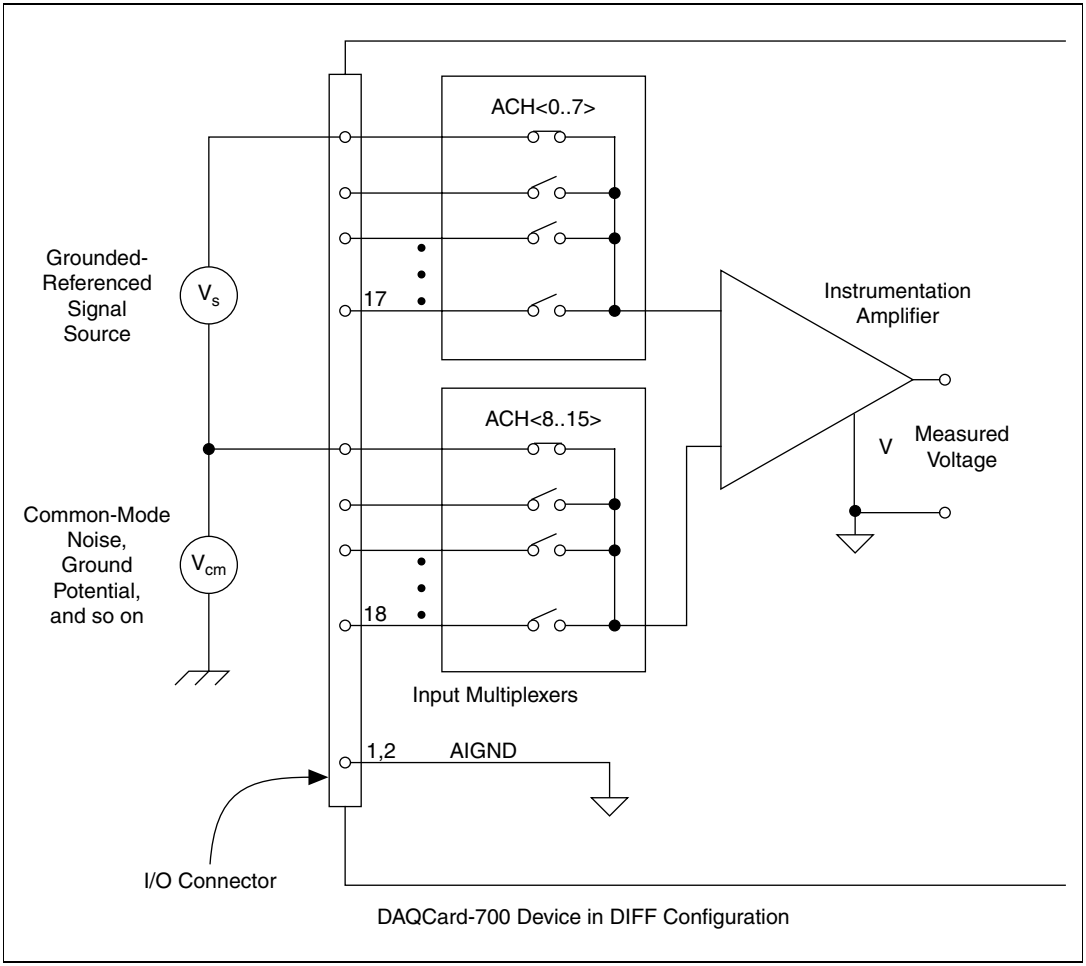

Figure 3-4. Differential Input Connections for Grounded Signal Sources

With this type of connection, the instrumentation amplifier rejects both the common-mode noise in the signal and the ground potential difference between the signal source and the DAQCard-700 ground (shown as V_{cm} in Figure 3-4).

Differential Connections for Floating Signal Sources

Figure 3-5 shows how to connect a floating signal source to a DAQCard-700 configured for DIFF input mode. Configuration instructions are included in the *Input Configurations* section.

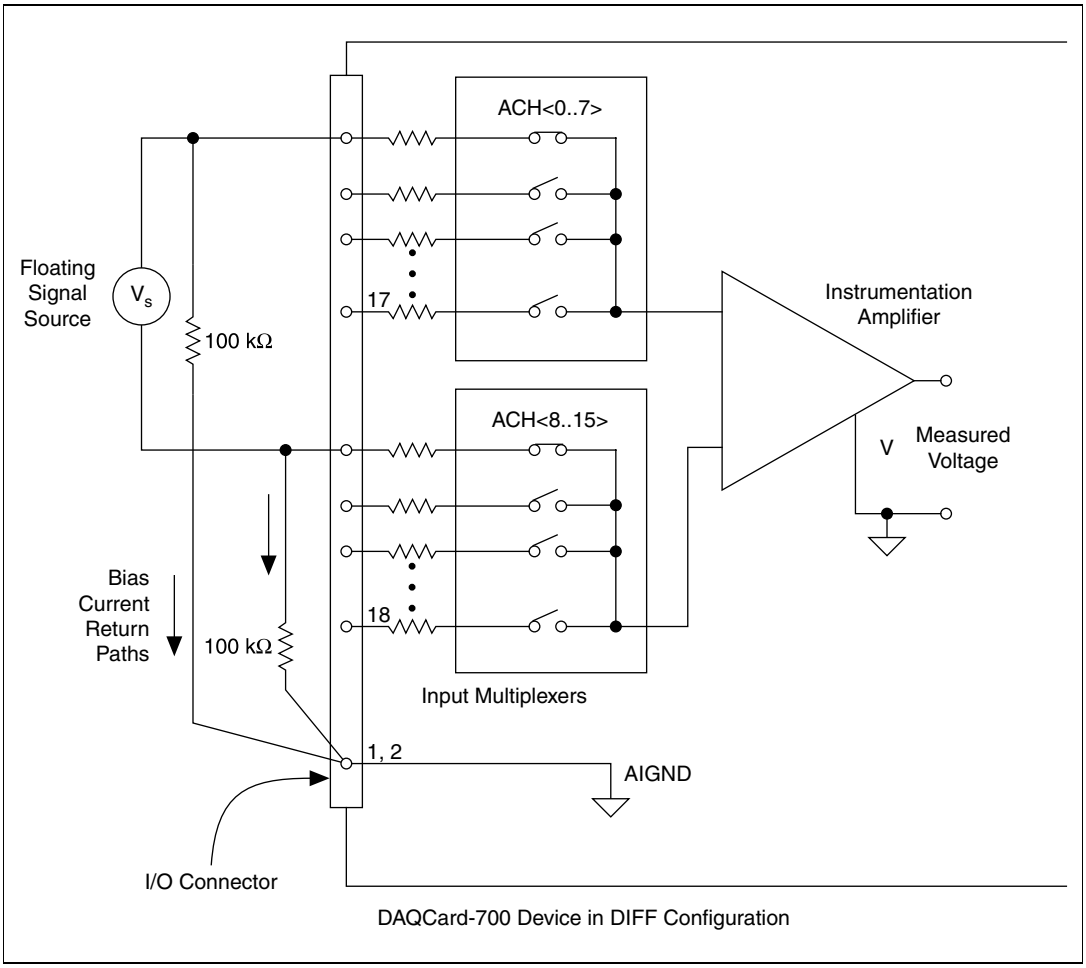

Figure 3-5. Differential Input Connections for Floating Sources

The 100 kΩ resistors shown in Figure 3-5 create a return path to ground for the bias currents of the instrumentation amplifier. If a return path is not provided, the instrumentation amplifier bias currents cause stray capacitances, resulting in uncontrollable drift and possible saturation in the amplifier. Typically, values from 10 kΩ to 100 kΩ are used.

A resistor from each input to ground, as shown in Figure 3-5, provides bias current return paths for an AC-coupled input signal. This solution, although necessary for AC-coupled signals, lowers the input impedance of the AI channel. In addition, the input offset current of the instrumentation amplifier contributes a DC offset voltage at the input. The amplifier has a maximum input offset current of ±0.75 nA and a typical offset current drift of ±1.5 pA/°C.

Multiplied by the 100 kΩ resistor, this current contributes a maximum offset voltage of 75 µV and a typical offset voltage drift of 150 nV/°C at the input. Thus, the offset is unlikely to be more than one LSB, so it can usually be ignored.

If the input signal is DC coupled, only the resistor connecting the negative signal input to ground is needed. This connection does not lower the input impedance of the AI channel.

Common-Mode Signal Rejection Considerations

Figures 3-4 and 3-5 show connections for signal sources that are already referenced to some ground point with respect to the DAQCard-700. In these cases, the instrumentation amplifier can reject any voltage due to ground potential differences between the signal source and the DAQCard-700. In addition, with DIFF input connections, the instrumentation amplifier can reject common-mode noise pickup in the leads connecting the signal sources to the DAQCard-700.

The common-mode input range of the DAQCard-700 instrumentation amplifier is defined as the magnitude of the greatest common-mode signal that can be rejected. The DAQCard-700 can reject common-mode input signals so long as V^{+}_{in} and V^{-}_{in} are both in the range ±9.5 V.

The common-mode input range for the DAQCard-700 depends on the size of the differential input signal ($V_{diff} = V^{+}_{in} - V^{-}_{in}$). The formula for the permissible common-mode input range is as follows:

$$V_{cm\text{-}max} = \pm (9.5\ V - V_{diff}/2)$$

Thus, for a differential voltage as large as 10 V, the largest common-mode voltage that can be rejected is ±4.5 V. However, if the differential signal is 2.5 V, ±8.25 V common-mode voltage can be rejected.

The common-mode voltage is measured with respect to the DAQCard-700 ground and can be calculated by the following formula:

$$V_{cm\text{-}actual} = (V^{+}_{in} + V^{-}_{in})/2$$

where V^{+}_{in} is the signal at the positive input of the instrumentation amplifier and V^{-}_{in} is the signal at the negative input of the instrumentation amplifier.

If the input signal common-mode range exceeds the maximum value (computed above) with respect to the DAQCard-700 ground, limit the amount of floating that occurs between the signal ground and the DAQCard-700 ground.

Connecting Digital I/O Signals

Pins 22 through 37 of the I/O connector are DIO signal pins. Pins 22 through 29 are digital input pins. Pins 30 through 37 are digital output pins. Pins 19 and 50 are digital ground pins.

Refer to Appendix A, *Specifications*, for more information about the specifications and ratings for the DIO lines.

Figure 3-6 shows an example of connections to the digital input and output ports. Digital input applications include receiving TTL signals and sensing external device states such as the switch in Figure 3-6. Digital output applications include sending TTL signals and driving external devices, such as the LED shown in Figure 3-6.

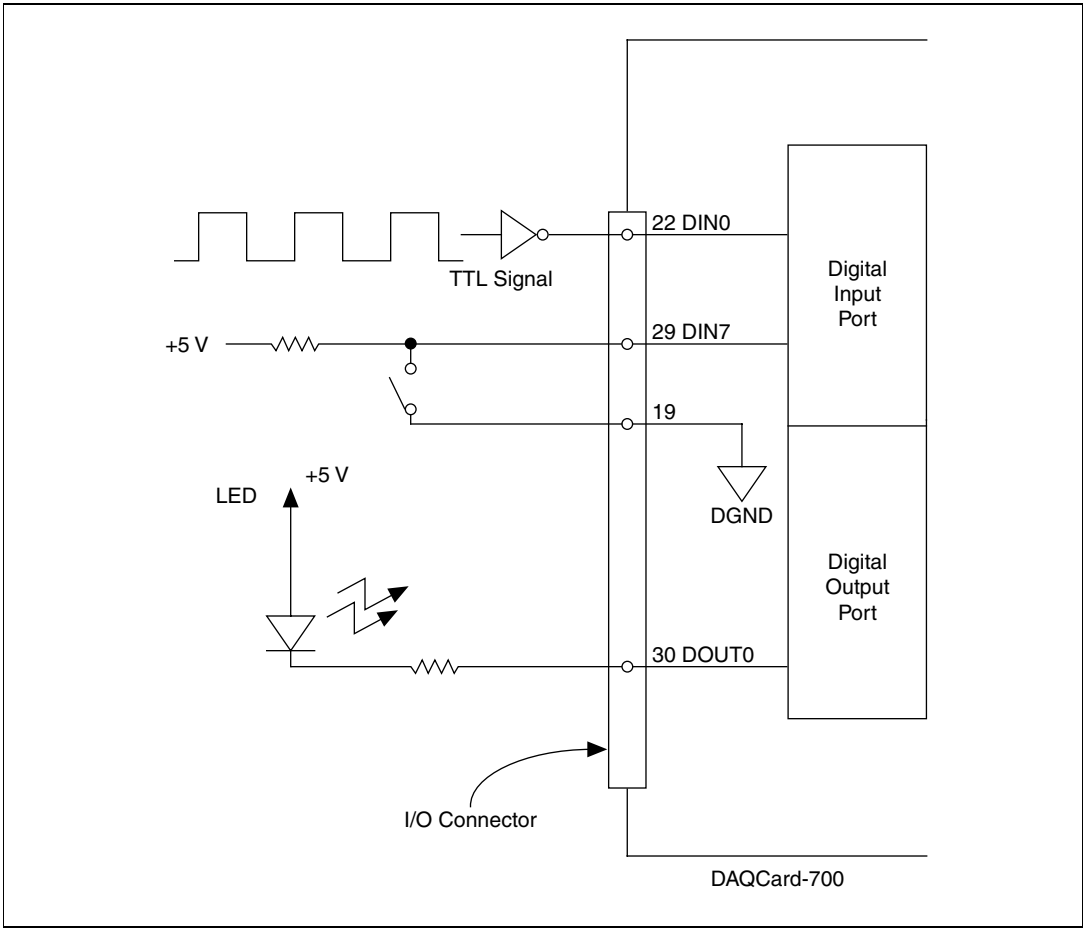

Figure 3-6. Digital I/O Signal Connections

Connecting Power

Pin 49 of the I/O connector sends +5 V from the PCMCIA I/O channel power supply. This pin is referenced to DGND and can be used to power external digital circuitry that draws up to 1 A. Pin 49 is connected to a 1 A resettable fuse on the card. The actual current available from this signal may be less than 1 A, depending on the computer. Notice also that any current drawn from this line adds to the power requirements from the computer.

Caution Connections, including power signals to ground and vice versa, that exceed any of the maximum signal ratings on the DAQCard-700 can result in damage to the DAQCard-700 card. NI is *not* liable for any injuries or damage resulting from incorrect signal connections

Connecting Timers

Pins 38 through 48 of the I/O connector are connections for TIO signals. The DAQCard-700 TIO uses an MSM82C54 counter/timer integrated circuit. All three integrated counter/timers of the MSM82C54 are available at the I/O connector. One of these counters, counter 0, is used for DAQ timing. Pin 40 carries an external signal, EXTCONV*, that can be used for DAQ timing in place of counter 0 of the MSM82C54. This signal is explained in the *Data Acquisition Counter and Timing Connections* section. Pins 38 and 41 through 48 carry general-purpose timing signals from the MSM82C54. These signals are explained under the *General-Purpose Counter and Timing Signal Connections* section.

Data Acquisition Counter and Timing Connections

Counter 0 on the MSM82C54 is used as a sample-interval counter in timed A/D conversions. In addition to counter 0, you can use pin 40, EXTCONV*, to externally time conversions. Figure 3-7 shows the timing requirements for the EXTCONV* input. An A/D conversion is initiated by a rising edge on the EXTCONV*. The data from this conversion is latched into the FIFO memory within 10 µs. The EXTCONV* input is a TTL-compatible signal.

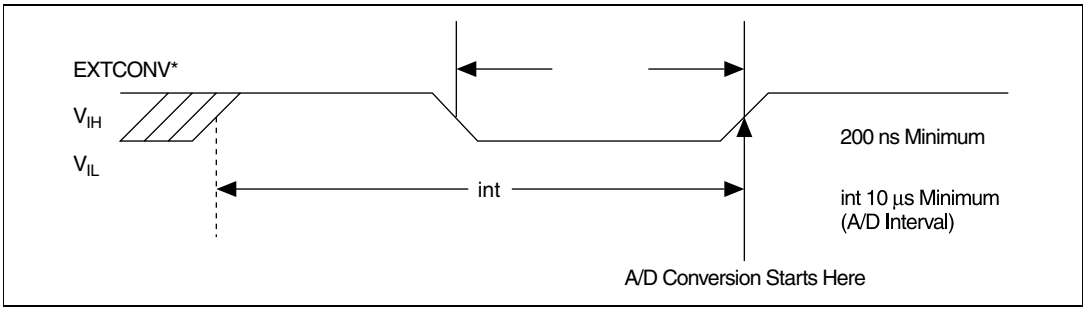

Figure 3-7. EXTCONV* Signal Timing

Notice that EXTCONV* only causes conversions to occur; you cannot use it as a monitor to detect conversions caused by the onboard sample-interval timer.

General-Purpose Counter and Timing Signal Connections

The general-purpose timing signals include the GATE, CLK, and OUT signals for the three integrated counter/timers, except CLK of counter 0 is not available on the I/O connector. You can use the counter/timers for general-purpose applications such as pulse and square wave generation, event counting, and pulse-width, time-lapse, and frequency measurement. For these applications, CLK and GATE signals are sent to the counters, and the counters are programmed for various operations. The only exceptions are counter 0, which has an internal 1 MHz clock, and counter 1, which can also be configured to use this clock.

The MSM82C54 is described briefly in the *Timing I/O Circuitry* section of Chapter 4, *Theory of Operation*.

To perform pulse and square wave generation, program a counter to generate a timing signal at its OUT output pin.

To count events, program a counter to count rising or falling edges applied to any of the MSM82C54 CLK inputs. You can then read the counter value to determine the number of edges that have occurred. You can gate counter operation on and off during event counting. Figure 3-8 shows connections for a typical event-counting operation in which a switch is used to gate the counter on and off.

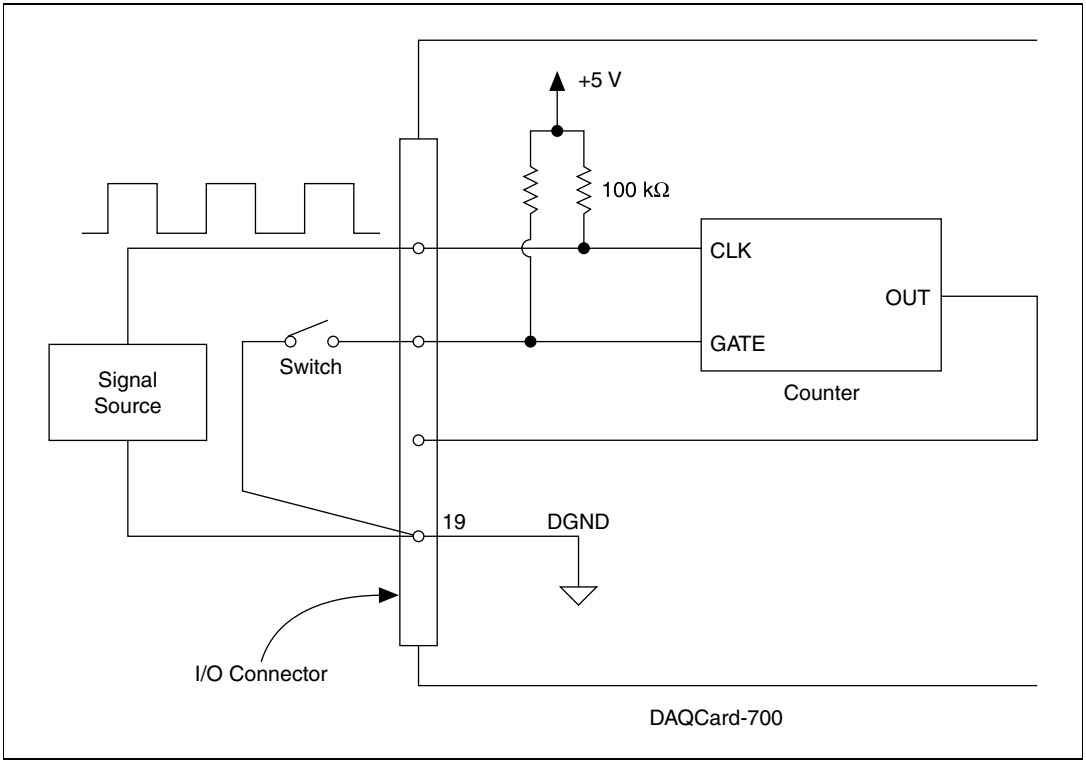

Figure 3-8. Event-Counting Application with External Switch Gating

Use level gating to measure pulse width. Apply the pulse to be measured to the counter GATE input. Load the counter with the known count and program the counter to count down while the signal at the GATE input is high. The pulse width equals the counter difference (loaded value minus read value) multiplied by the CLK period.

To measure time lapse, program a counter to be edge gated. Apply an edge to the counter GATE input to start the counter. Program the counter to start counting after receiving a low-to-high edge. The time lapse since receiving the edge equals the counter value difference (loaded value minus the read value) multiplied by the CLK period.

To measure frequency, program a counter to be level gated and count the number of falling edges in a signal applied to a CLK input. The gate signal you applied to the counter GATE input is of a known duration. In this case, program the counter to count falling edges at the CLK input while the gate is applied. The frequency of the input signal then equals the count value divided by the gate period. Figure 3-9 shows the connections for a frequency measurement application. You could also use a second counter to generate the gate signal in this application.

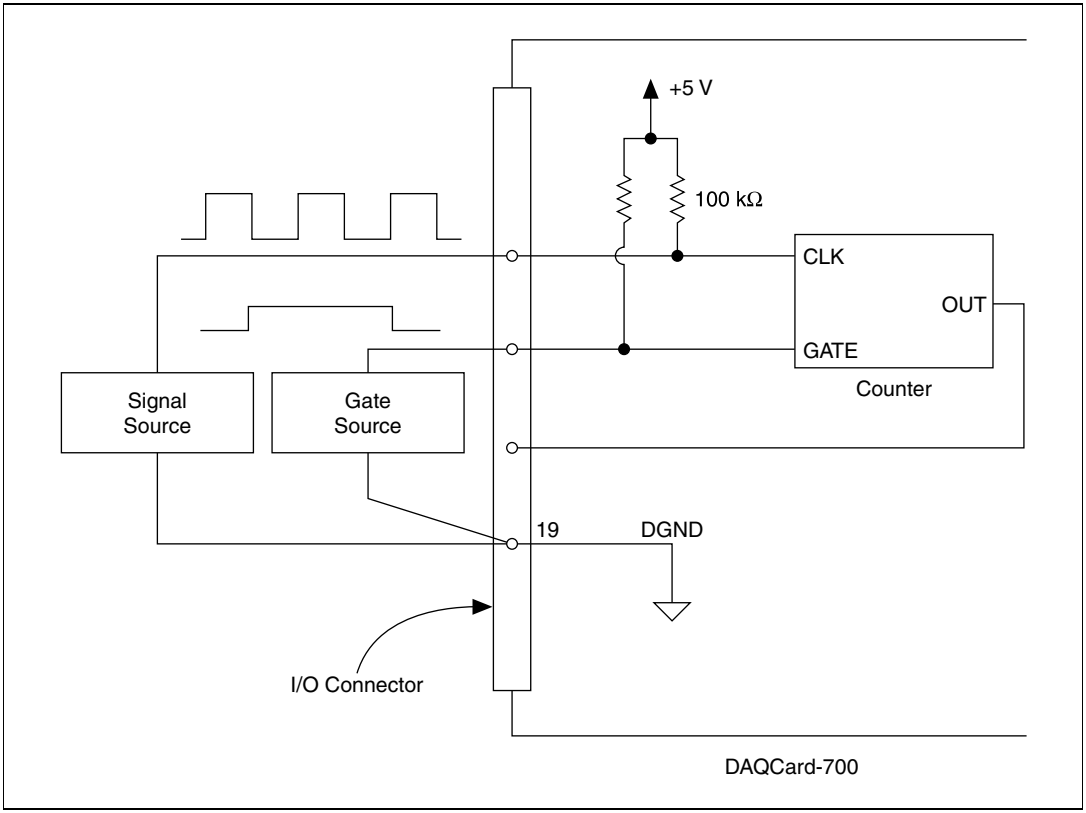

Figure 3-9. Frequency Measurement Application

The GATE, CLK, and OUT signals for counters 1 and 2 are available at the I/O connector. In addition, the GATE and CLK pins are pulled up to +5 V through a 100 kΩ resistor.

Figure 3-10 shows the timing requirements for the GATE and CLK input signals and the timing specifications for the OUT output signals of the MSM82C54.

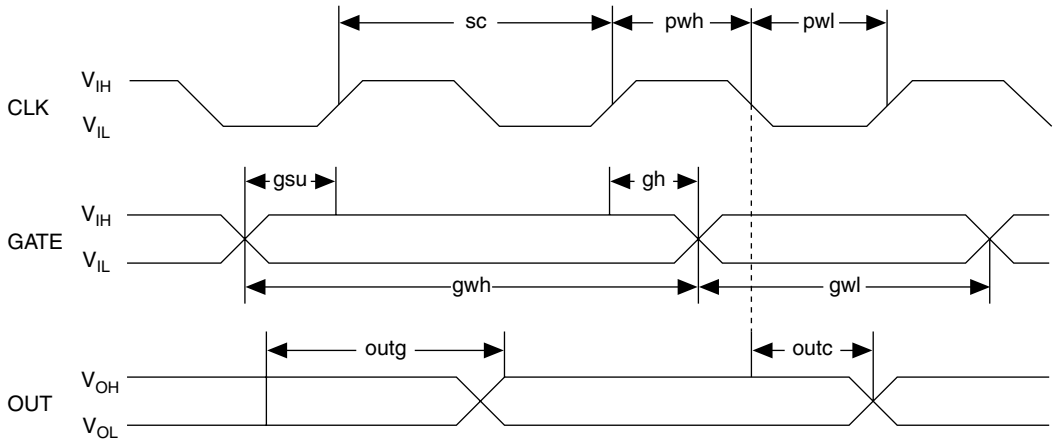

sc	clock period	100 ns min
pwh	clock high level	30 ns min
pwl	clock low level	50 ns min
gsu	gate setup time	40 ns min
gh	gate hold time	50 ns min
gwh	gate high level	50 ns min
gwl	gate low level	50 ns min
outc	output delay from clock ↓	100 ns max
outg	output delay from gate ↓	100 ns max

Figure 3-10. General-Purpose Timing Signals

The GATE and OUT signals in Figure 3-10 are referenced to the rising edge of the CLK signal.

Refer to Appendix A, *Specifications*, for more information about the MSM82C54 DIO specifications.

4

Theory of Operation

This chapter includes an overview of the DAQCard-700 and explains the operation of each functional unit making up the DAQCard-700.

Functional Overview

The block diagram in Figure 4-1 shows a functional overview of the DAQCard-700.

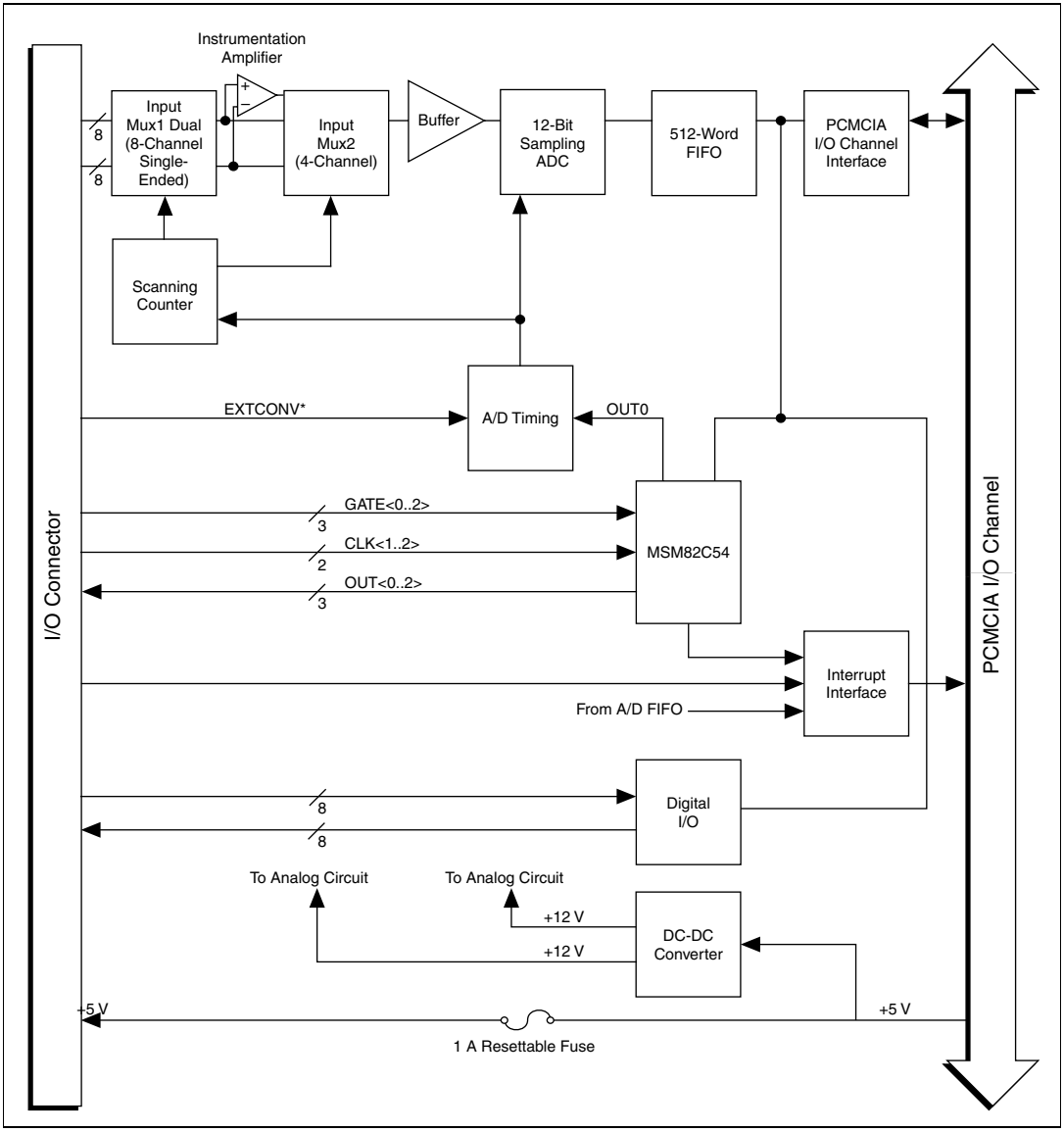

Figure 4-1. DAQCard-700 Block Diagram

The following are the major components making up the DAQCard-700:

- PCMCIA I/O channel interface circuitry
- AI circuitry

- DIO circuitry
- TIO circuitry

DAQ functions can be executed by using the AI circuitry and some of the TIO circuitry. The internal data and control buses interconnect the components. The theory of operation for each of these components is explained in the remainder of this chapter. The theory of operation for the DAQ circuitry is included with the discussion of the AI circuitry.

PCMCIA I/O Channel Interface Circuitry

The PCMCIA I/O channel interface circuitry consists of an address bus, a data bus, interrupt lines, and several control and support signals. The components making up the DAQCard-700 PCMCIA I/O channel interface circuitry are shown in Figure 4-2.

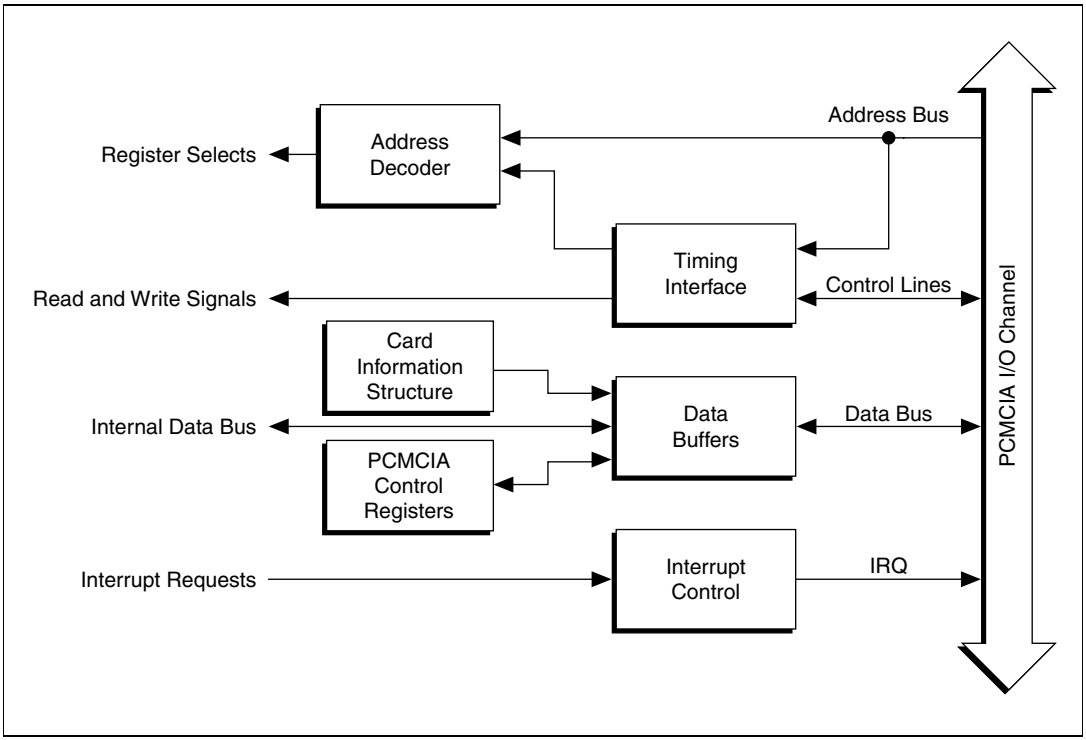

Figure 4-2. PCMCIA I/O Interface Circuitry Block Diagram

When you first insert the card, the system examines information stored in the DAQCard-700 Card Information Structure (CIS). This data is used to configure the card for the system in which it is used. When the system has assigned the card to a section of memory, it updates the PCMCIA control registers and initializes the card.

The rest of the circuitry consists of address decoders, data buffers, I/O channel interface timing control circuitry, and interrupt control circuitry. The circuitry monitor uses CE1* (controlled by the PCMCIA Card and Socket Services Software) as the card enable signal, and uses lines <A0..A4> plus timing signals to generate the onboard register select signals and read/write signals. The data buffers control the direction of data transfer on the bidirectional data lines based on whether the transfer is a read or write. The interrupt control circuitry routes any enabled interrupts to the IREQ* line, which is routed to an available interrupt request line by the system motherboard. The DAQCard-700 generates interrupts in three different situations:

- When a prescribed number of A/D conversions can be read from FIFO
- When an active low-level signal is detected on the EXTINT* line
- When a rising-edge signal is detected on counter 2 output

Each one of these interrupts is individually enabled and cleared.

Analog Input and Data Acquisition Circuitry

The DAQCard-700 has 16 AI channels with 12-bit A/D conversion. Using the timing circuitry, the DAQCard-700 can automatically time multiple A/D conversions. Figure 4-3 shows a block diagram of the AI and DAQ circuitry.

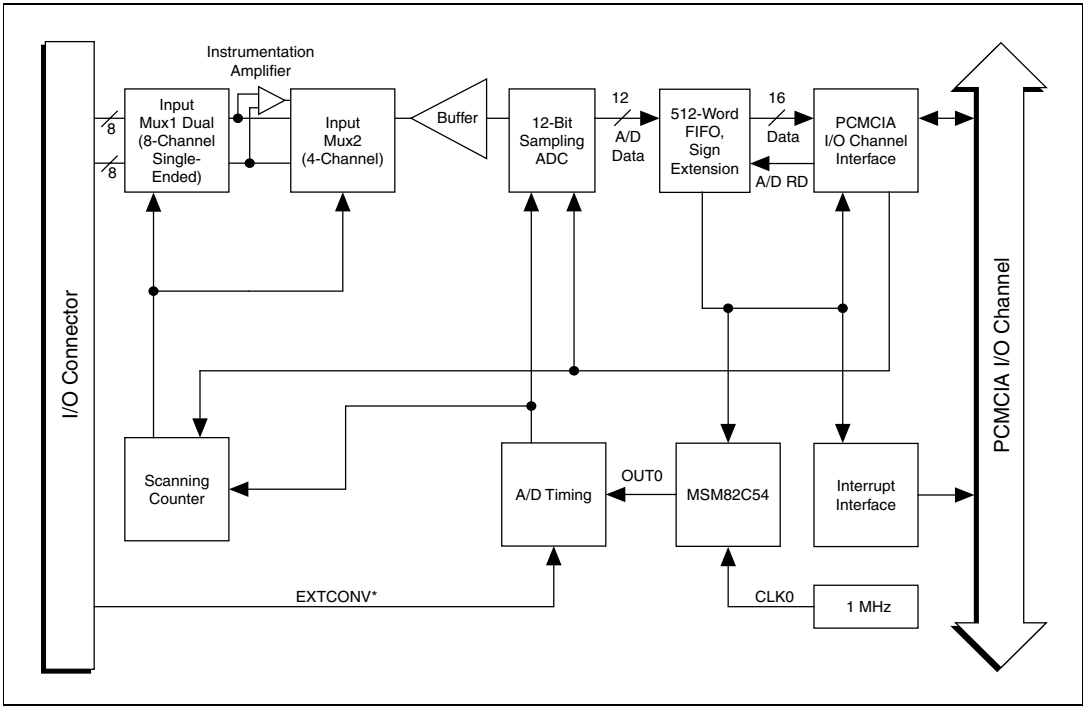

Figure 4-3. Analog Input and DAQ Circuitry Block Diagram

Analog Input Circuitry

The AI circuitry consists of an input multiplexer, a software-selectable gain stage, and a 12-bit sampling ADC. The 12-bit output is sign-extended to 16 bits, then stored in a FIFO memory that is 512 words deep.

The input multiplexer stage is made up of two CMOS AI multiplexers. In single-ended mode, the input multiplexers switch between 16 AI channels (channels 0 through 15). In DIFF input mode, one of the input multiplexers switches between eight differential pairs (channels 0 and 8, 1 and 9, and so on). With the input multiplexer stage, input overvoltage protection of ± 30 V is available, powered on or off.

The DAQCard-700 uses a 12-bit successive-approximation ADC. Software-selectable gains of 1, 0.5, and 0.25 for the input signal combined with the ADC fixed input range of ± 10 V yield three useful AI signal ranges. These ranges are ±10 V, ± 5 V, and ± 2.5 V.

When an A/D conversion is complete, the ADC clocks the result into the A/D FIFO. The A/D FIFO is 16 bits wide and 512 words deep. This FIFO

serves as a buffer to the ADC and has two benefits. First, when an A/D conversion is complete, the value is saved in the A/D FIFO for later reading, and the ADC is free to start a new conversion. Secondly, the A/D FIFO can collect up to 512 A/D conversion values before any information is lost, thus giving the software some extra time (512 times the sample interval) to catch up with the hardware. If more than 512 values are stored in the A/D FIFO without the A/D FIFO being read from, an error condition called A/D FIFO overflow occurs and A/D conversion information is lost.

The A/D FIFO generates a signal that indicates when it contains A/D conversion data. The state of this signal can be read from the Status Register.

The output from the ADC is a two's complement number ranging from –2,048 to 2,047. The output from the 12-bit ADC is always sign-extended to 16 bits by the card circuitry so that data values read from the FIFO are 16 bits wide.

Data Acquisition Timing Circuitry

A DAQ operation refers to the process of obtaining a series of successive A/D conversions at a carefully timed interval called the *sample interval*. The DAQ timing circuitry consists of various clocks and timing signals that perform this timing. The DAQCard-700 can perform two types of data acquisition: single-channel data acquisition and multichannel (scanned) data acquisition. Scanned data acquisition uses a counter to automatically switch between AI channels during data acquisition. The *scan interval* is equal to the number of channels multiplied by the sample interval.

DAQ timing consists of signals that initiate a DAQ operation and generate scanning clocks. Sources for these signals are supplied mainly by timers on the DAQCard-700 card. One of the three counters of the MSM82C54 is reserved for this purpose.

An A/D conversion can be initiated internally during data acquisition by a low-to-high transition on the counter 0 output (OUT0) of the MSM82C54, or externally by a low-to-high transition on EXTCONV* input.

The sample-interval timer is a 16-bit down counter that uses the onboard 1 MHz clock to generate sample intervals from 2 µs to 65,535 µs (Refer to the *Timing I/O Circuitry* section). Each time the sample-interval timer reaches zero, it generates a pulse and reloads with the programmed sample-interval count. This operation continues until the counter is reprogrammed.

Notice that only counter 0 is required for DAQ operations. The software must track the number of conversions that have occurred and turn off counter 0 after the required number of conversions has been obtained.

Single-Channel Data Acquisition

During single-channel data acquisition, a control register is set to select the analog input channel before data acquisition is initiated. This multiplexer setting remains constant during the entire data acquisition process; therefore, all A/D conversion data is read from a single channel.

Multichannel (Scanned) Data Acquisition

Multichannel data acquisition is performed by enabling scanning during data acquisition. Multichannel scanning is controlled by a scan counter.

For scanning operations, the scan counter decrements from the highest numbered channel (selected by the user) through channel 0 and then repeats the sequence. For RSE input mode, therefore, any number of channels from 2 to 16 can be scanned. For DIFF input mode, any number of channels from 2 to 8 can be scanned. Notice that the same AI range is used for all channels in the scan sequence.

Data Acquisition Rates

The maximum data acquisition rate (number of samples per second) is determined by the conversion period of the ADC plus the acquisition time of its track-and-hold stage. During multichannel scanning, the data acquisition rate is further limited by the settling time of the input multiplexers and operational amplifier. After the input multiplexers are switched, the amplifier must be able to settle to the new input signal value to within 12-bit accuracy before an A/D conversion is performed, or 12-bit accuracy cannot be achieved.

If the chosen data acquisition rate does not allow the specified settling time, the analog input circuitry may not perform at 12-bit accuracy. Furthermore, if the maximum data acquisition rate is exceeded, A/D conversions may be lost. The maximum data acquisition rate and settling time specifications at various input ranges are listed in Appendix A, *Specifications*.

These settling time specifications assume that voltage levels on all the channels included in the scan sequence are within range and are driven by low-impedance sources. Signal levels outside the ranges on the channels included in the scan sequence adversely affect the input settling time. Similarly, greater settling time may be required for channels driven by high-impedance signal sources.

Digital I/O Circuitry

The DAQCard-700 has 16 TTL-compatible DIO lines. DIN<0..7> are digital input lines, and DOUT<0..7> are digital output lines. These lines are monitored, or driven, by the Digital Input Register and the Digital Output Register, respectively. Reading the Digital Input Register returns the current state of DIN<0..7>. Writing the Digital Output Register drives the new value onto DOUT<0..7>. An external device may drive the EXTINT* signal to indicate readiness for data transfer. Figure 4-4 shows a diagram of this circuitry.

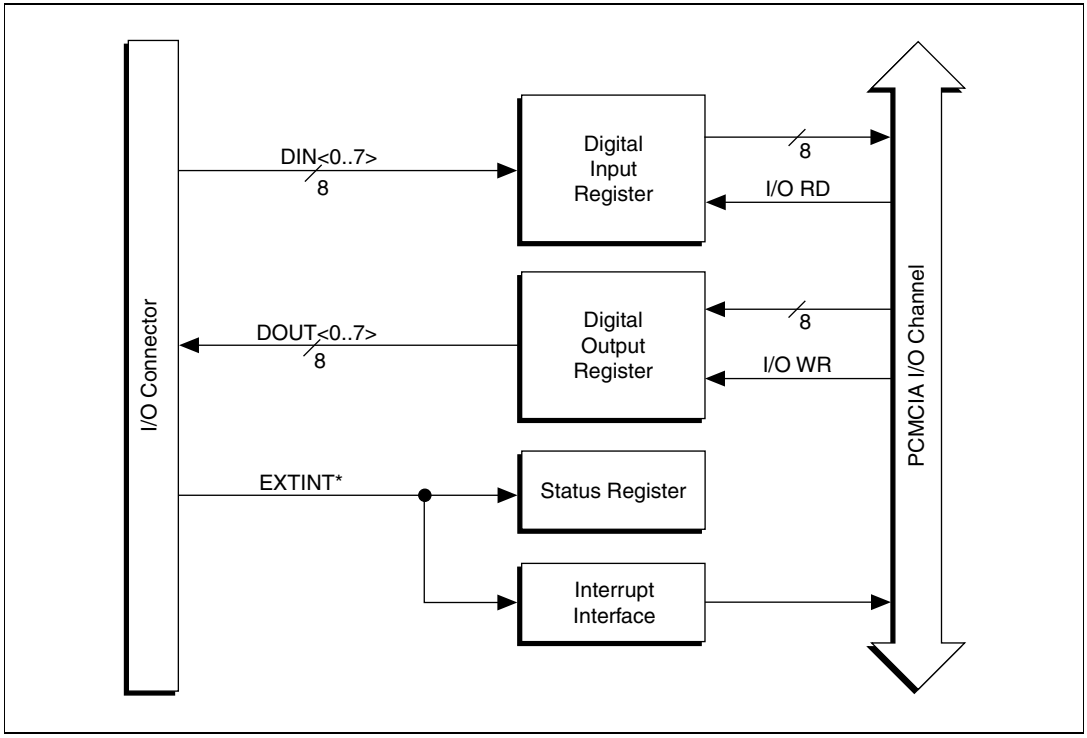

Figure 4-4. Digital I/O Circuitry Block Diagram

Timing I/O Circuitry

The DAQCard-700 uses an MSM82C54 counter/timer integrated circuit for DAQ timing and general-purpose TIO functions. Three counters of the MSM82C54 are available for general use, but Counter 0 is also used internally for DAQ timing. Figure 4-5 shows a block diagram of both groups of TIO circuitry.

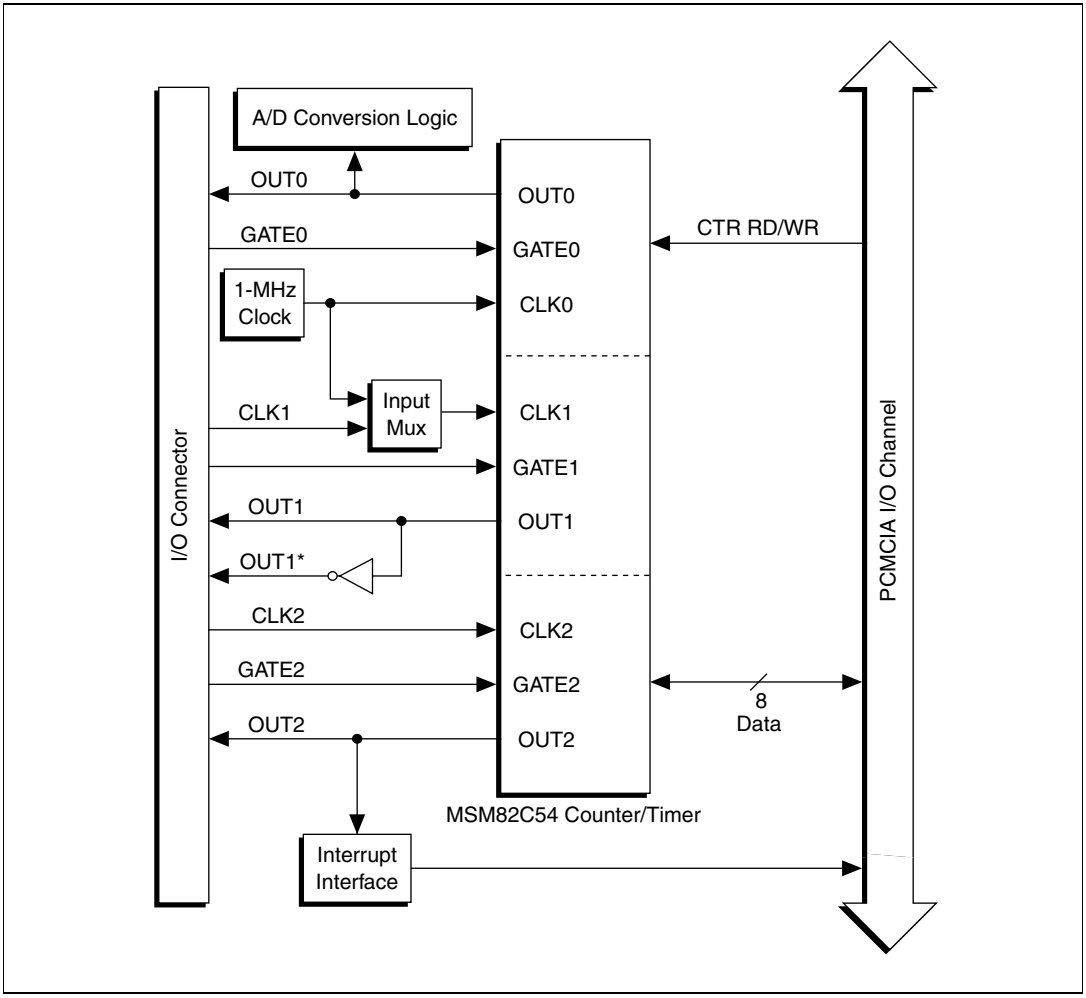

Figure 4-5. Timing I/O Circuitry Block Diagram

The MSM82C54 contains three independent 16-bit counter/timers and one 8-bit mode register. As shown in Figure 4-5, counter 0 can be used for DAQ timing, and counters 1 and 2 are free for general use. Counter 0 is free for general use when EXTCONV* is being used to time the AI circuitry or when the DAQ circuitry is not in use.

The MSM82C54 counter 0 uses a 1 MHz clock generated from the onboard oscillator. The timebases for counters 1 and 2 can be supplied externally through the 50-pin I/O connector. In addition, counter 1 can optionally use the same onboard 1 MHz clock that is used for DAQ timing, which facilitates synchronous operations. The counters in the MSM82C54 can be diagrammed as shown in Figure 4-6.

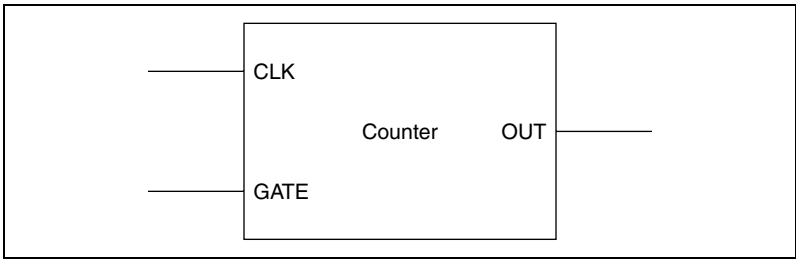

Figure 4-6. Counter Block Diagram

Each counter has a clock input pin, a gate input pin, and an output pin labeled CLK, GATE, and OUT, respectively. The MSM82C54 counters are numbered zero through two, and their GATE, CLK, and OUT pins are labeled GATE *N*, CLK *N*, and OUT *N*, where *N* is the counter number.

A

Specifications

This appendix lists the specifications of the DAQCard-700. These specifications are typical at 25 °C unless otherwise noted. The operating temperature range is 0 to 70 °C.

Analog Input

Input Characteristics

Number of channels	16 single-ended or 8 differential, software-selectable
Type of ADC	Successive approximation
Resolution	12 bits, worst-case code range –2024 to +2023 (due to software calibration)
Max sampling rate	100 kS/s[1]
Input signal ranges	±10 V, ±5 V, ±2.5 V; software-selectable
Input coupling	DC
Max working voltage (signal + common mode)	Each input should remain within ±9.5 V of AIGND (in DIFF mode)
Overvoltage protection	±30 V powered on, ± 30 V powered off
Inputs protected	ACH<0..15>
FIFO buffer size	512 samples
Data transfers	Interrupts, programmed I/O

[1] Please refer to the *Dynamic Characteristics* section for maximum scan rates with stated accuracy.

Transfer Characteristics

Relative accuracy.....±1 LSB typ, ±1.5 LSB max

DNL.....±0.5 LSB typ, ±1 LSB max

No missing codes.....12 bits, guaranteed

Offset error

After software calibration.....±1 LSB

Before software calibration .....±2 LSB typ, ±9 LSB max

Gain error (relative to calibration reference)

After software calibration.....±0.036% max

Before software calibration .....±0.07% of reading typ, ±0.4% max

Amplifier Characteristics

Input impedance .....1 GΩ in parallel with 40 pF

CMRR (all input ranges) .....–72 dB, DC to 60 Hz

Dynamic Characteristics

Settling time ±0.024% accuracy
(±1 LSB) for full-scale step.....25 µs max at ±10 V, ±5 V
10 µs at ±2.5 V (RSE)

System noise.....0.5 LSB $_{rms}$ at ±5 V range

Stability

Recommended warm-up time.....15 min

Onboard calibration reference

Level.....3.0 V (±0.2 mV)

Temperature coefficient.....60 ppm/°C max

Digital I/O

Number of channels.....8 input and 8 output

Compatibility .....TTL-compatible

Maximum votage input rating..... +5.5 V with respect to DGND
–5.5 V with respect to DGND

Digital logic levels

Level	Min	Max
Input low voltage	0 V	0.8 V
Input high voltage	2 V	5 V
Input low current (V_{in} = 0 V)	—	–50 µA
Input high current (V_{in} = 5 V)	—	1 µA
Output low voltage (I_{out} = 4 mA)	—	0.4 V
Output high voltage (I_{out} = 4 mA)	3.7 V	—

Timing I/O

Number of channels ..... 3 counter/timers
(1 dedicated to analog input)

Resolution ..... 16 bits

Compatibility ..... TTL, gate and source pulled high with 100 kΩ resistors

Maximum voltage input rating..... –0.5 to +5.0 V with respect to DGND

Digital logic levels for MSM82C54

Level	Min	Max
Input low voltage	—	+0.8 V
Input high voltage	—	+2.2 V
Input load current	—	± 10.0 A
Output low voltage	—	+0.40 V
Output high voltage	+3.0 V	—
Output source current	—	± 2.5 mA
Output sink current	—	±2.5 mA

Base clocks available.....1 MHz

Base clock accuracy.....±0.01%

Max source frequency.....10 MHz

Min source pulse duration .....50 ns

Min gate pulse duration .....50 ns

Data transfers.....Programmed I/O

Bus Interface

Type .....slave

Power Requirement

+5 VDC (±5%) .....100 mA in operational mode
70 mA in power-down mode

Note These power usage figures do *not* include the power used by external devices that you have connected to the fused supply present on the I/O connector.

Physical

PC Card type.....Type II

I/O connector .....50-pin male

Maximum Working Voltage

Maximum working voltage refers to the signal voltage plus the common-mode voltage.

Channel-to-earth .....30 VAC or 60 VDC, installation category I

Channel-to-channel.....30 VAC or 60 VDC, installation category I

Environmental

Operating temperature .....0 to 70 °C

Storage temperature.....–55 to 150 °C

Humidity ..... 5 to 90% RH, noncondensing

Maximum altitude ..... 2000 meters

Pollution degree (indoor use only)..... 2

Safety

The DAQCard-700 meets the requirements of the following standards for safety and electrical equipment for measurement, control, and laboratory use:

- EN 61010-1:1993/A2:1995, IEC 61010-1:1990/A2:1995
- UL 3111-1:1994
- CAN/CSA c22.2 no. 1010.1:1992/A2:1997

Electromagnetic Compatibility

CE, C-Tick, and FCC Part 15 (Class A) Compliant

Electrical emissions..... EN 55011 Class A at 10 m
FCC Part 15A above 1 GHz

Electrical immunity..... Evaluated to EN 61326:1997/
A1:1998, Table 1

Note For full EMC compliance, you must operate this device with shielded cabling. In addition, all covers and filler panels must be installed. Refer to the Declaration of Conformity (DoC) for this product for any additional regulatory compliance information. To obtain the DoC for this product, click **Declaration of Conformity** at `ni.com/hardref.nsf/`. This Web site lists the DoCs by product family. Select the appropriate product family, followed by your product, and a link to the DoC appears in Adobe Acrobat format. Click the Acrobat icon to download or read the DoC.

B

Differences between the PC-LPM-16 and the DAQCard-700

This appendix contains a summary of differences between the PC-LPM-16 and the DAQCard-700 that may be relevant to you if you are a current PC-LPM-16 user.

The DAQCard-700 is compatible with the PC-LPM-16. Software developed for the PC-LPM-16 using NI-DAQ or LabWindows routines, as well as LabVIEW VIs for the PC-LPM-16, typically works with the DAQCard-700 without modification. The following table summarizes the significant differences.

Table B-1. Functionality Differences Between the PC-LPM-16 and the DAQCard-700

Functionality	PC-LPM-16	DAQCard-700
FIFO read	Two 8-bit words	One 16-bit word
FIFO buffer size	16 samples	512 samples
Maximum sample rate	50 kS/s	100 kS/s
Supply voltages at I/O connector	+5 V, +12 V, –12 V	+5 V
Maximum input voltage rating	± 45 V	± 30 V
ADC calibration	Hardware calibration	Software calibration
Timer chip	MSM82C53	MSM82C54*
Maximum timer source frequency	8 MHz	10 MHz
Input modes	Single ended	Single ended or differential
Input ranges	±5 V, ±2.5 V, 0–10 V, 0–5 V, jumper selectable	±10 V, ±5 V, ±2.5 V, software-selectable
* The MSM82C54 timer used in the DAQCard-700 is compatible with the MSM82C53.		

C

Common Questions

This appendix contains a list of common questions and answers relating to the operation of the DAQCard-700. The questions are grouped according to the type of information requested.

Installing and Configuring the DAQCard-700

Which NI documentation should I read first to get started using NI-DAQ?

Refer to the *Configuring the DAQCard-700* section of Chapter 2, *Installing and Configuring the DAQCard-700*, for this information.

What version of NI-DAQ must I have to program the DAQCard-700?

The DAQCard-700 is supported by NI-DAQ for Windows versions 6.9.*x* and earlier. You may also use the DAQCard-700 with NI-DAQ for Mac OS version 6.6.*x* or version 4.9.4 or earlier.

What is the best way to test the DAQCard without having to program the DAQCard?

If you are using Windows, MAX has a Test Panel option that is available by clicking **Devices and Interfaces** and then clicking the device. The Test Panels are excellent tools for performing simple functional tests of the DAQCard, such as analog input, digital I/O, and counter/timer tests. If you are using Mac OS, the NI-DAQ Configuration Utility provides the same functionality.

Operating the DAQCard-700

When using the DAQCard in differential analog input mode, I have connected a differential input signal, but my readings are random and drift rapidly. What's wrong?

Check the ground-reference connections. The signal may be referenced to a level that is considered *floating* with reference to the DAQCard ground reference. Even if you are in DIFF input mode, the signal *must* still be

referenced to the same ground level as the DAQCard reference. There are various methods of achieving the same ground level while maintaining a high CMRR. These methods are outlined in Chapter 3, *Connecting Signals*.

I want to use NI-DAQ to program the DAQCard-700. How can I determine which NI-DAQ functions support the DAQCard?

If you are using NI-DAQ 6.7 or later, refer to the *NI-DAQ Function Reference Help*. Click **NI-DAQ Functions»Listed by Hardware Product** for a complete list of functions supported by the DAQCard-700. If you are using NI-DAQ 6.6 or earlier, refer to Appendix C, *NI-DAQ Function Support*, of the *NI-DAQ Function Reference Manual for PC Compatibles.*

I wish to register-level program the DAQCard-700. Where can I find the information that I need to accomplish this task?

Register-level programming is not recommended for most users. Even experienced register-level programmers will find that using the NI-DAQ, LabVIEW, or Measurement Studio ADE is as easy and as flexible as register-level programming and can save weeks of development time. However, if you choose to register-level program, you can download the *DAQCard-700 Register-Level Programmer Manual* from `ni.com/manuals`.

D

Technical Support Resources

Web Support

NI Web support is your first stop for help in solving installation, configuration, and application problems and questions. Online problem-solving and diagnostic resources include frequently asked questions, knowledge bases, product-specific troubleshooting wizards, manuals, drivers, software updates, and more. Web support is available through the Technical Support section of `ni.com`.

NI Developer Zone

The NI Developer Zone at `ni.com/zone` is the essential resource for building measurement and automation systems. At the NI Developer Zone, you can easily access the latest example programs, system configurators, tutorials, technical news, as well as a community of developers ready to share their own techniques.

Customer Education

NI provides a number of alternatives to satisfy your training needs, from self-paced tutorials, videos, and interactive CDs to instructor-led hands-on courses at locations around the world. Visit the Customer Education section of `ni.com` for online course schedules, syllabi, training centers, and class registration.

System Integration

If you have time constraints, limited in-house technical resources, or other dilemmas, you may prefer to employ consulting or system integration services. You can rely on the expertise available through our worldwide network of Alliance Program members. To find out more about our Alliance system integration solutions, visit the System Integration section of `ni.com`.

Worldwide Support

NI has offices located around the world to help address your support needs. You can access our branch office Web sites from the Worldwide Offices section of `ni.com`. Branch office Web sites provide up-to-date contact information, support phone numbers, e-mail addresses, and current events.

If you have searched the technical support resources on our Web site and still cannot find the answers you need, contact your local office or NI corporate. Phone numbers for our worldwide offices are listed at the front of this manual.

Glossary

Prefix	Meaning	Value
p-	pico-	10^{-12}
n-	nano-	10^{-9}
µ-	micro-	10^{-6}
m-	milli-	10^{-3}
k-	kilo-	10^{3}
M-	mega-	10^{6}
G-	giga-	10^{9}

Numbers/Symbols

°	degrees
Ω	ohms
%	percent
±	plus or minus
+5 V	+5 VDC source signal

A

A	amperes
AC	alternating current
ACH	analog input channel signal
ActiveX controls	a special form of Automation Object. ActiveX Controls are similar to Visual Basic custom controls (VBXs), but their architecture is based on OLE; ActiveX Controls can be freely plugged into any OLE-enabled development tool, application, or Web browser
A/D	analog-to-digital
ADC	A/D converter

ADE	application development environment such as LabVIEW, LabWindows/CVI, BridgeVIEW, Visual Basic, C, and C++
AI	analog input
AIGND	analog input ground signal
ANSI	American National Standards Institute
AWG	American Wire Gauge

B

bipolar	a signal range that includes both positive and negative values (for example, –5 V to +5 V)
bit	one binary digit, either 0 or 1
buffer	temporary storage for acquired or generated data (software)
byte	eight related bits

C

C	Celsius
CE	card enable signal
CIS	card information structure
CLK	clock input signal
CMOS	complementary metallic oxide semiconductor
CMRR	common-mode rejection ratio
COM	communications port
counter/timer	a circuit that counts external pulses or clock pulses (timing)
CPU	central processing unit

D

D/A	digital-to-analog
DAQ	data acquisition
dB	decibel

DC	direct current
DGND	digital ground signal
DIFF	differential configuration
DIN	digital input signal
DIO	digital input/output
DOS	disk operating system
DOUT	digital output signal
drivers/driver software	software that controls a specific hardware device such as a DAQ device

E

EEPROM	erasable programmable read-only memory—ROM that can be erased (usually by ultraviolet light exposure) and reprogrammed
EXTCONV	external control signal to trigger A/D conversions
EXTINT	external interrupt signal

F

F	farads
FIFO	first-in-first-out
ft	feet

G

GATE	gate input signal
gh	gate hold time
gsu	gate setup time
gwh	gate high level
gwl	gate low level

H

Hz	hertz

I

I/O	input/output
in.	inches
interrupt	a computer signal indicating that the CPU should suspend its current task to service a designated activity
I_{OH}	output source current, at V_{OH}
I_{OL}	output sink current, at V_{OL}
I_{out}	output current
IREQ	interrupt request

K

KB	kilobytes

L

LabVIEW	a graphical programming language
LED	light-emitting diode
LSB	least significant bit

M

max	maximum
MAX	Measurement and Automation Explorer—a controlled centralized configuration environment that allows you to configure your National Instruments DAQ device
MB	megabytes of memory
MSB	most significant bit
mux	multiplexer—a switching device with multiple inputs that sequentially connects each of its inputs to its output, typically at high speeds, in order to measure several signals with a single analog input channel

N

NC	not connected (signal)
NI	National Instruments
NI-DAQ	National Instruments driver software for DAQ hardware

O

OUT	output signal
outc	output delay from clock
outg	output delay from gate

P

PC Card	a credit-card-sized expansion card that fits in a PCMCIA slot often referred to as a PCMCIA card
PCMCIA	Personal Computer Memory Card International Association
pwh	clock high level
pwl	clock low level

R

RAM	random-access memory
RH	relative humidity
rms	root mean square
ROM	read-only memory
RSE	referenced single-ended mode—all measurements are made with respect to a common reference measurement system or a ground; also called a grounded measurement system

S

S	samples
s	seconds

sample interval	amount of time between samples
sc	clock period
scan interval	the number of channels multiplied by the sample interval
settling time	the amount of time required for a voltage to reach its final value within specified limits

T

TIO	timing input/output
trigger	any event that causes or starts some form of data capture
TTL	transistor-transistor logic
two's complement	given a number *x* expressed in base 2 with *n* digits to the left of the radix point, the (base 2) number $2n - x$

U

unipolar	a signal range that is always positive (for example, 0 to +10 V)

V

V	volts
V_{cm}	common-mode noise
VDC	volts, direct current
V_{diff}	differential input signal
VI	virtual instrument
V_{IH}	volts, input high
V_{IL}	volts, input low
V_{in}	volts in
V_{OH}	volts, output high
V_{OL}	volts, output low
V_s	signal source

Index

Symbols

+5 V signal, 3-3

A

ACH<0..15> signal, 3-2
AIGND signal, 3-2
analog input
    specifications, A-1
analog input circuitry
    block diagram, 4-5
    theory of operation, 4-5
analog input configuration
    analog input modes, 2-4
    default settings (table), 2-3
    DIFF input
        configuration, 2-5
        definition (table), 2-4
    exceeding maximum ratings (caution), 2-3
    RSE input
        configuration, 2-4
        definition (table), 2-4
analog input signal connections
    differential (DIFF) connections
        common-mode signal rejection considerations, 3-12
        floating signal sources, 3-11
        grounded signal sources, 3-10
    differential input mode, 3-6
    exceeding maximum input rating (caution), 3-4
    floating measurement system, 3-5
    floating signal sources, 3-4
    ground-referenced measurement system, 3-5
    ground-referenced signal sources, 3-4
    input configurations, 3-5
    instrumentation amplifier, 3-5
    pins for analog input, 3-3
    recommended input configurations, 3-7
    single-ended connection s, 3-7
    single-ended input mode, 3-6
    types of measurement systems, 3-4
    types of signal sources, 3-4

B

bus interface, A-4

C

cabling, 1-4
CLK, OUT, and GATE signals for general-purpose timing, 3-16
CLK1 signal, 3-3
CLK2 signal, 3-3
common-mode signal rejection considerations, 3-12
configuration
    analog I/O
        analog input modes, 2-4
        default settings (table), 2-3
        DIFF input, 2-5
        exceeding maximum ratings (caution), 2-3
        RSE input, 2-4
    counter/timers, 2-5
    digital I/O, 2-5
    input configurations
        differential input mode, 3-6
        instrumentation amplifier, 3-6
        recommended input configurations (table), 3-7
        single-ended input mode, 3-6

PC Card, C-1
typical configuration (figure), 2-2
conventions used in the manual, *vii*
counter/timers
See also general-purpose counter and timing connections
configuration, 2-5
MSM82C54 counter/timer, 3-16
customer education, E-1

D

DAQCard-1200
configuration. *See* configuration
installation, 2-1
unpacking, 1-5
DAQCard-700
block diagram, 4-2
compared with PC-LPM-16, B-1
features, 1-1
major components, 4-2
what you need to get started, 1-2
data acquisition counter and timing connections, 3-15
data acquisition timing circuitry
block diagram, 4-5
data acquisition rates, 4-7
multichannel (scanned) data acquisition, 4-7
single-channel data acquisition, 4-7
theory of operation, 4-6
DGND signal, 3-2, 3-3
DIFF input
configuration, 2-5
definition (table), 2-4
differential input mode, 3-6
differential connections
common-mode signal rejection considerations, 3-12
definition, 3-9
floating signal sources, 3-11
grounded signal sources, 3-10
when to use, 3-9
digital I/O
circuitry, 4-8
configuration, 2-5
signal connections, 3-13
specifications, A-2
DIN<0..7> signal, 3-2
DOUT<0..7> signal, 3-3

E

event-counting applications, 3-17
EXTCONV* signal
data acquisition counter and timing connections, 3-15
definition, 3-3
timing (figure), 3-15
EXTINT* signal, 3-3

F

floating measurement system, 3-5
floating signal sources
definition, 3-4
differential connections, 3-11
recommended input configurations (table), 3-7
frequency measurement application (figure), 3-18

G

GATE, CLK, and OUT signals for general-purpose timing, 3-16
GATE0 signal, 3-3
GATE1 signal, 3-3
GATE2 signal, 3-3

general-purpose counter and timing connections
event-counting applications (figure), 3-17
figure, 3-19
frequency measurement (figure), 3-18
pulse and square wave generation, 3-16
pulse-width measurement, 3-17
time-lapse measurement, 3-17
timing specifications, 3-19
ground-referenced measurement system, 3-5
ground-referenced signal sources
definition, 3-4
differential connections, 3-10
recommended input configurations (table), 3-7

I

I/O connector
exceed maximum ratings (caution), 3-1
pin assignments (figure), 3-2
input configurations
DIFF
definition (table), 2-4
purpose, 2-5
differential mode, 3-6
instrumentation amplifier (figure), 3-5
recommended input configurations, 3-7
RSE
definition (table), 2-4
purpose, 2-4
single-ended mode, 3-6
installation, DAQCard-1200, 2-1
instrumentation amplifier
figure, 3-5
purpose and use, 3-6

M

measurement systems
floating, 3-5
ground-referenced, 3-5
multichannel (scanned) data acquisition, 4-7

N

National Instruments documentation, *viii*
National Instruments Web support, E-1
NI Developer Zone, E-1

O

operation of DAQCard-700
See also theory of operation
OUT, GATE, and CLK signals for general-purpose timing, 3-16
OUT0 signal, 3-3
OUT1 signal, 3-3
OUT1* signal, 3-3
OUT2 signal, 3-3

P

PC-LPM-16, compared with DAQCard-700, B-1
PCMCIA
I/O channel interface circuitry, 4-3
physical specifications, A-4
power connections, 3-14
power requirement specifications, A-4
pulse and square wave generation, 3-16
pulse-width measurement, 3-17

R

referenced single-ended input. *See* RSE input
RSE input
configuration, 2-4
definition (table), 2-4

S

signal connections
analog input signal connections
differential (DIFF) connections
common-mode signal rejection considerations, 3-12
floating signal sources, 3-11
grounded signal sources, 3-10
differential input mode, 3-6
exceeding maximum input rating (caution), 3-4
floating measurement system, 3-5
floating signal sources, 3-4
ground-referenced measurement system, 3-5
ground-referenced signal sources, 3-4
input configurations, 3-5
instrumentation amplifier, 3-5
pins for analog input, 3-3
recommended input configurations, 3-7
single-ended connections, 3-7
single-ended input mode, 3-6
types of measurement systems, 3-4
types of signal sources, 3-4
cabling, 1-4
digital I/O signal connections, 3-13
I/O connector
exceed maximum ratings (caution), 3-1
pin assignments (figure), 3-2
power connections, 3-14
signal descriptions, 3-2
timing connections
data acquisition counter and timing connections, 3-15
general-purpose counter and timing signal connections, 3-16
single-channel data acquisition, 4-7
single-ended connection considerations
connecting signal source (figure), 3-8
when to use, 3-7
single-ended input mode, 3-6
specifications
analog input, A-1
bus interface, A-4
digital I/O, A-2
physical, A-4
power requirement, A-4
timing I/O, A-3
square wave generation, 3-16
system integration, by National Instruments, E-1

T

technical support resources, E-1
theory of operation
analog input circuitry, 4-5
block diagram, 4-2
data acquisition timing circuitry, 4-6
data acquisition rates, 4-7
multichannel (scanned) data acquisition, 4-7
single-channel data acquisition, 4-7
major components, 4-1
PCMCIA I/O channel interface circuitry, 4-3
time-lapse measurement, 3-17
timing connections
data acquisition counter and timing connections, 3-15
EXTCONV* signal timing (figure), 3-15

general-purpose counter and timing connections
event-counting applications (figure), 3-17
figure, 3-19
frequency measurement (figure), 3-18
pulse and square wave generation, 3-16
pulse-width measurement, 3-17
time-lapse measurement, 3-17
timing specifications, 3-19
general-purpose counter and timing signal connections, 3-16
timing I/O circuitry
block diagram, 4-9
counter block diagram, 4-10
specifications, A-3
theory of operation, 4-9

U

unpacking the DAQCard-1200, 1-5

W

Web support from National Instruments, E-1
worldwide technical support, E-2