75000 Series C

Keysight E1406A Command Module Service Guide

KEYSIGHT TECHNOLOGIES

Notices

© Keysight Technologies, Inc. 1996-2019

No part of this manual may be reproduced in any form or by any means (including electronic storage and retrieval or translation into a foreign language) without prior agreement and written consent from Keysight Technologies, Inc. as governed by United States and international copyright laws.

Manual Part Number

E1406-40011

Edition

Edition 3, July 2019

Published by

Keysight Technologies, Inc.
900 S. Taft Ave.
Loveland, CO 80537 USA

Sales and Technical Support

To contact Keysight for sales and technical support, refer to the support links on the following Keysight websites:

www.keysight.com/find/E1406A

(product-specific information and support, software and documentation updates)

www.keysight.com/find/assist (worldwide contact information for repair and service)

Declaration of Conformity

Declarations of Conformity for this product and for other Keysight products may be downloaded from the Web. Go to http://keysight.com/go/conformity and click on "Declarations of Conformity." You can then search by product number to find the latest Declaration of Conformity.

Technology Licenses

The hardware and/or software described in this document are furnished under a license and may be used or copied only in accordance with the terms of such license.

Warranty

THE MATERIAL CONTAINED IN THIS DOCUMENT IS PROVIDED "AS IS," AND IS SUBJECT TO BEING CHANGED, WITHOUT NOTICE, IN FUTURE EDITIONS. FURTHER, TO THE MAXIMUM EXTENT PERMITTED BY APPLICABLE LAW, KEYSIGHT DISCLAIMS ALL WARRANTIES, EITHER EXPRESS OR IMPLIED, WITH REGARD TO THIS MANUAL AND ANY INFORMATION CONTAINED HEREIN, INCLUDING BUT NOT LIMITED TO THE IMPLIED WARRANTIES OF MERCHANTABILITY AND FITNESS FOR A PARTICULAR PURPOSE. KEYSIGHT SHALL NOT BE LIABLE FOR ERRORS OR FOR INCIDENTAL OR CONSEQUENTIAL DAMAGES IN CONNECTION WITH THE FURNISHING, USE, OR PERFORMANCE OF THIS DOCUMENT OR OF ANY INFORMATION CONTAINED HEREIN. SHOULD KEYSIGHT AND THE USER HAVE A SEPARATE WRITTEN AGREEMENT WITH WARRANTY TERMS COVERING THE MATERIAL IN THIS DOCUMENT THAT CONFLICT WITH THESE TERMS, THE WARRANTY TERMS IN THE SEPARATE AGREEMENT SHALL CONTROL.

Keysight Technologies does not warrant third-party system-level (combination of chassis, controllers, modules, etc.) performance, safety, or regulatory compliance unless specifically stated.

DFARS/Restricted Rights Notices

If software is for use in the performance of a U.S. Government prime contract or subcontract, Software is delivered and licensed as "Commercial computer software" as defined in DFAR 252.227-7014 (June 1995), or as a "commercial item" as defined in FAR 2.101(a) or as "Restricted computer software" as defined in FAR 52.227-19 (June 1987) or any equivalent agency regulation or contract clause. Use, duplication or disclosure of Software is subject to Keysight Technologies' standard commercial license terms, and non-DOD Departments and Agencies of the U.S. Government will receive no greater than Restricted Rights as defined in FAR 52.227-19(c)(1-2) (June 1987). U.S. Government users will receive no greater than Limited Rights as defined in FAR 52.227-14 (June 1987) or DFAR 252.227-7015 (b)(2) (November 1995), as applicable in any technical data.

Safety Information

The following general safety precautions must be observed during all phases of operation of this instrument. Failure to comply with these precautions or with specific warnings or operating instructions in the product manuals violates safety standards of design, manufacture, and intended use of the instrument. Keysight Technologies assumes no liability for the customer's failure to comply with these requirements.

General

Do not use this product in any manner not specified by the manufacturer. The protective features of this product must not be impaired if it is used in a manner specified in the operation instructions.

Before Applying Power

Verify that all safety precautions are taken. Make all connections to the unit before applying power. Note the external markings described under "Safety Symbols".

Ground the Instrument

Keysight chassis' are provided with a grounding-type power plug. The instrument chassis and cover must be connected to an electrical ground to minimize shock hazard. The ground pin must be firmly connected to an electrical ground (safety ground) terminal at the power outlet. Any interruption of the protective (grounding) conductor or disconnection of the protective earth terminal will cause a potential shock hazard that could result in personal injury.

Do Not Operate in an Explosive Atmosphere

Do not operate the module/chassis in the presence of flammable gases or fumes.

Do Not Operate Near Flammable Liquids

Do not operate the module/chassis in the presence of flammable liquids or near containers of such liquids.

Cleaning

Clean the outside of the Keysight module/chassis with a soft, lint-free, slightly dampened cloth. Do not use detergent or chemical solvents.

Do Not Remove Instrument Cover

Only qualified, service-trained personnel who are aware of the hazards involved should remove instrument covers. Always disconnect the power cable and any external circuits before removing the instrument cover.

Keep away from live circuits

Operating personnel must not remove equipment covers or shields. Procedures involving the removal of covers and shields are for use by service-trained personnel only. Under certain conditions, dangerous voltages may exist even with the equipment switched off. To avoid dangerous electrical shock, DO NOT perform procedures involving cover or shield removal unless you are qualified to do so.

DO NOT operate damaged equipment

Whenever it is possible that the safety protection features built into this product have been impaired, either through physical damage, excessive moisture, or any other reason, REMOVE POWER and do not use the product until safe operation can be verified by service-trained personnel. If necessary, return the product to a Keysight Technologies Sales and Service Office for service and repair to ensure the safety features are maintained.

DO NOT block the primary disconnect

The primary disconnect device is the appliance connector/power cord when a chassis used by itself, but when installed into a rack or system the disconnect may be impaired and must be considered part of the installation.

Do Not Modify the Instrument

Do not install substitute parts or perform any unauthorized modification to the product. Return the product to a Keysight Sales and Service Office to ensure that safety features are maintained.

In Case of Damage

Instruments that appear damaged or defective should be made inoperative and secured against unintended operation until they can be repaired by qualified service personnel

CAUTION

Do NOT block vents and fan exhaust: To ensure adequate cooling and ventilation, leave a gap of at least 50mm (2") around vent holes on both sides of the chassis.

Do NOT operate with empty slots: To ensure proper cooling and avoid damaging equipment, fill each empty slot with an AXIe filler panel module.

Do NOT stack free-standing chassis: Stacked chassis should be rack-mounted.

All modules are grounded through the chassis: During installation, tighten each module's retaining screws to secure the module to the chassis and to make the ground connection.

WARNING

Operator is responsible to maintain safe operating conditions. To ensure safe operating conditions, modules should not be operated beyond the full temperature range specified in the Environmental and physical specification. Exceeding safe operating conditions can result in shorter lifespan, improper module performance and user safety issues. When the modules are in use and operation within the specified full temperature range is not maintained, module surface temperatures may exceed safe handling conditions which can cause discomfort or burns if touched. In the event of a module exceeding the full temperature range, always allow the module to cool before touching or removing modules from the chassis.

Safety Symbols

CAUTION

A CAUTION denotes a hazard. It calls attention to an operating procedure or practice, that, if not correctly performed or adhered to could result in damage to the product or loss of important data. Do not proceed beyond a CAUTION notice until the indicated conditions are fully understood and met.

WARNING

A WARNING denotes a hazard. It calls attention to an operating procedure or practice, that, if not correctly performed or adhered to, could result in personal injury or death. Do not proceed beyond a WARNING notice until the indicated conditions are fully understood and met.

Products display the following symbols:

Warning, risk of electric shock

Refer to manual for additional safety information.

Earth Ground.

Chassis Ground.

Alternating Current (AC).

Direct Current (DC)

Contents

1 General Information

Introduction 11
Safety Information 12
WARNINGS 12
CAUTIONS 13
Product Information 14
Specifications 14
Serial Numbers 14
Options 15
Upgrades 15
Operating/Storage Environments 15
Recommended Test Equipment 16
Inspection/ Shipping 16
Initial Inspection 16
Shipping Guidelines 18

2 Verification Tests

Introduction 19
Command Module Configuration 20
Factory Settings 20
Some Command Module Definitions 22
Resource Manager/Slot 0 Device 22
Logical Address/GPIB Address 22
Commander/Servant Areas 23
Command Module Self-Tests 25
Test S-1: GPIB Power-On Test 25
Description 25
Set up Equipment 25
Example Program 26
Typical Result 27
Test S-2: RS-232 Power-On Self-Test 28
Description 28
Set up Equipment 28
Typical Results 28
Functional Verification Tests 31
Test F-1: Front Panel Outputs 32
Description 32
Set up Equipment 33
Example Program 34

Typical Results . . . 36
Test F-2: General System Information . . . 37
Description . . . 37
Set up Equipment . . . 37
Example Program . . . 37
Typical Results . . . 38
Test F-3: Hierarchy/Device Information . . . 39
Description . . . 39
Set up Equipment· . . . 40
Example Program . . . 41
Typical Results . . . 44
VXI:CONF:HIER? Command Results . . . 44
VXI:CONF:INF? Command Results . . . 45
Test F-4: Table/Memory Information . . . 46
Description . . . 46
Configuration Table Addresses . . . 46
Command Module Memory Addresses/Sizes . . . 46
Set Up Equipment . . . 46
Example Program . . . 47
Typical Results . . . 51
Test F-5: Interrupt/Status Information . . . 53
Description . . . 53
Interrupt Information . . . 53
Status Information . . . 53
Set Up Equipment . . . 53
Example Program . . . 54
Typical Results . . . 55
Test F-6: Triggering Information . . . 57
Description . . . 57
Set Up Equipment . . . 57
Example Program . . . 58
Typical Results . . . 60
Test F-7: Serial Port Information . . . 61
Set Up Equipment . . . 61
Example Program . . . 62
Typical Results . . . 64

3 Replaceable Parts

Introduction 65
Exchange Modules 65
Replaceable Parts Lists 65
Component Locators 68

4 Service

Introduction 71
Repair Strategy 71
Troubleshooting 72
1 Prepare the Mainframe 72
2 Check LEDs and Terminal Display 72
3 Ready LED (ONLY) ON 74
4 Failed and SYSFAIL LEDs ON 74
5 Failed LED (ONLY) ON 74
6 Check Command Module 75
Assembly/ Disassembly Instructions 76
Repair/ Maintenance Guidelines 85
ESD Precautions 85
Soldering Printed Circuit Boards 85
Post-Repair Safety Checks 86
Returning an Keysight E1406A 87
1 Determine the Module Version 87
2 Ship the Module to Keysight Technologies 88

5 Error Messages

Introduction 89
Error Message Types 89
Configuration Errors 90
Example: Reading the Error Queue 90

A Verification Tests - C Programs

Introduction 107

1 General Information

Introduction

This service manual contains information to test, troubleshoot, and repair the Keysight E 1406A Command Module. Figure 1-1 shows a typical E1406A Command Module.

NOTE See “Keysight 75000 Series C Service Documentation”, page 4, for a list of manuals that describe mainframe and command module operation and hardware. The information in this manual assumes you are familiar with Keysight E 1406A Com m and Module operation. If incoming inspection is required, see “Inspection/Shipping” in this chapter.

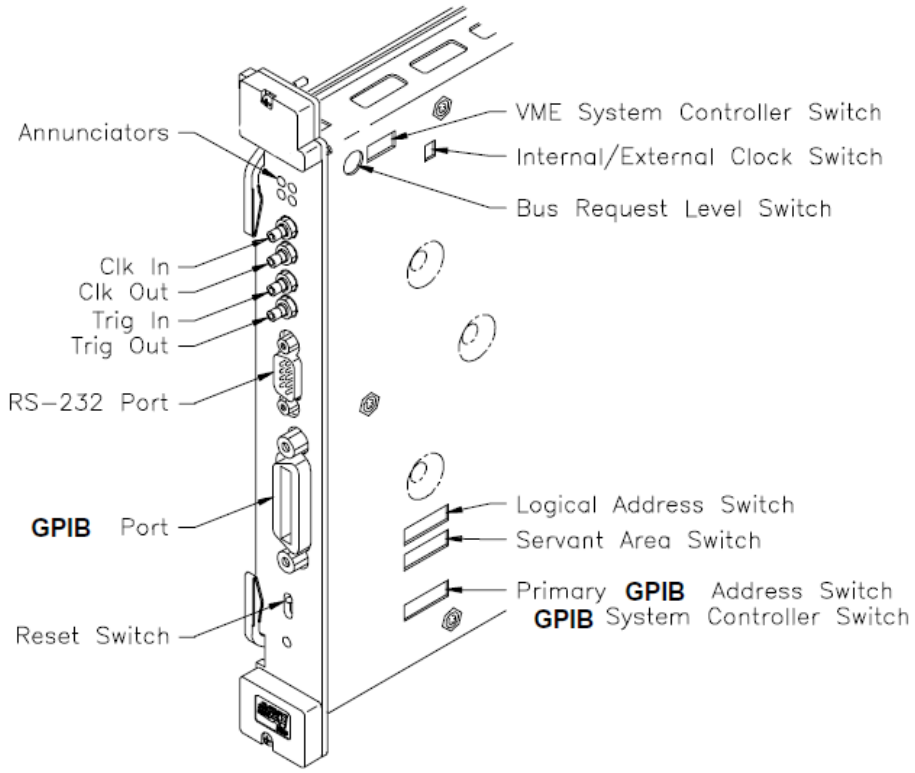

Figure 1-1 Keysight E1406A Command Module

Safety Information

The Keysight E 1406A Command Module is a Safety Class I instrument that is provided with a protective earth terminal when installed in the mainframe. Check the mainframe, command module, and all related documentation for safety markings and instructions before operating or servicing a command module.

See the WAR NING S page for a summary of safety information. Safety information to test and service the E 1406A Command Module follows and is also found throughout this manual.

WARNINGS

Follow the WAR NING S listed to avoid possible injury to yourself or others when operating, repairing, or servicing an Keysight E 1406A Command Module.

WARNING

SERVICE-TRAINED PERSONNEL ONLY. The information in this manual is for service-trained personnel who are familiar with electronic circuitry and are aware of the hazards involved. To avoid personal injury or damage to the instrument, do not perform procedures in this manual or do any servicing unless you are qualified to do so.

CHECK MAINFRAME POWER SETTINGS. Before applying power, verify that the mainframe setting matches the line voltage and the correct fuse is installed. An uninterruptible safety earth ground must be provided from the main power source to the supplied power cord set.

GROUNDING REQUIREMENTS. Interruption of the protective (grounding) conductor (inside or outside the mainframe) or disconnecting the protective earth terminal will cause a potential shock hazard that could result in personal injury. (Grounding one conductor of a two-conductor outlet is not sufficient protection.)

IMPAIRED PROTECTION. Whenever it is likely that instrument protection has been impaired, the mainframe must be made inoperative and be secured against any unintended operation.

WARNING

REMOVE POWER IF POSSIBLE. Some procedures in this manual may be performed with power supplied to the mainframe while protective covers are removed. Energy available at many points may, if contacted, result in personal injury. (If service can be performed without power applied, remove the power.)

USING AUTOTRANSFORMERS. If the mainframe is to be energized via an autotransformer (for voltage reduction) make sure the common terminal is connected to neutral (that is, the grounded side of the main's supply).

USE PROPER FUSES. For continued protection against fire hazard, replace the line fuse(s) only with fuses of the same current rating and type (such as normal blow, time delay, etc.). Do not use repaired fuses or short-circuited fuseholders.

CAUTIONS

Follow the CAUTIONS listed to avoid possible damage to the equipment when performing instrument operation, service, or repair.

CAUTION

MAXIMUM FRONT PANEL INPUTS. Maximum input to the Clk In port is ± 42.5 Vp-p (TTL or low level AC). Minimum input to the Clk In port is ± 40 mVp-p. Maximum input to the Trig In port is 12.5 MHz (TTL) or 40 MHz (ECL). Minimum pulse width for the input is 30 nsec (TTL) or 12.5 nsec (ECL).

STATIC ELECTRICITY. Static electricity is a major cause of component failure. To prevent damage to the electrical components in the command module, observe anti-static techniques when removing a command module from the mainframe or when working on a command module. Also, be sure to tighten the front panel screws when installing a command module in a mainframe slot.

Product Information

This section lists Keysight E 1406A Command Module:

- specifications
- serial number information
- options
- upgrades
- environmental limits
- recommended test equipment

Specifications

See Appendix A - Specifications in the Keysight E 1406A Command Module User's Manual for command module specifications.

Serial Numbers

Figure 1-2 shows Keysight Technologies serial number structure. Keysight E 1406A Command Modules covered by this manual are identified by the serial number prefixes listed on the title page.

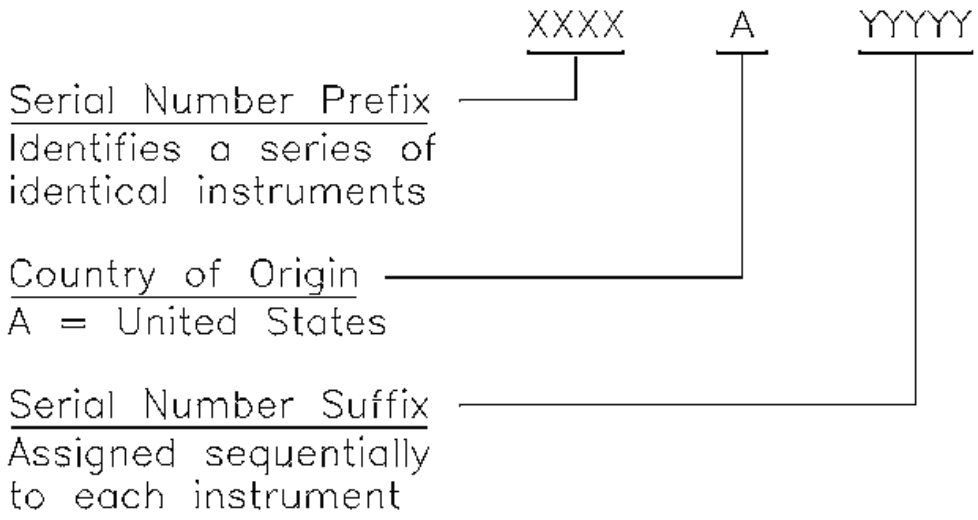

Figure 1-2 Keysight Technologies Serial Numbers

Options

Table 1-1 shows the options for the Keysight E 1406A Command Module. The Keysight E1406A Command Module can be upgraded. See the next section “Upgrades” for information.

Table 1-1 Keysight E1406A Command Module Options

Model	Description	Option
Keysight E1406A	standard with Expanded Memory with IBASIC[1]	- - - 010 020

1 IBASIC = Instrument BASIC

Upgrades

Table 1-2 shows available upgrade paths for the Keysight E 1406A Command Module and the upgrade kit(s) required. You can order the upgrade kits from your nearest Keysight Technologies Sales and Support Office. (A list of these offices is at the back of this manual.)

Table 1-2 Keysight E1406A Upgrades

Kit	Part Number
Expanded Memory	E1406-80010
IBASIC	E1406-80020

Operating/Storage Environments

The Command Module should be stored in a clean, dry environment. See Table 1-3 for recommended command module operating/storage environments.

Table 1-3 Keysight E1406A Command Module Environments

	Temperature	Relative Humidity
Operating Environment	0°C to + 55°C	< 65% (0 °C to + 40°C)
Storage/Shipment	-40°C to + 75°C	< 65% (0°C to + 40°C)

Recommended Test Equipment

See Table 1-4 for test equipment recommended to test and service the command module. Essential requirements for each piece of test equipment are listed in the Requirements column. You may substitute other equipment if it meets the requirements in Table 1-4.

Table 1-4 Keysight E1406A Command Module Recommended Test Equipment

Instrument	Requirements	Recommended Model	Use[1]
Controller, GPIB	GPIB compatibility as defined by IEEE Standard 488-1987 and the identical ANSI Standard MC1.1: SH1, AH1, T2, TE0, L2, LE0, SR0, RL0, PP0, DC0, DT0, and C1, 2, 3, 4, 5	HP 9000 Series 300 or IBM Compatible PC with BASIC	F,T
Mainframe	Compatible with Keysight E1406A	Keysight E1400B/T, E1421A/B	F,T
Digital Multimeter	Voltage Range: ± 10 VDC Current Range: ± 20 mA DC	Keysight 3458A	T
Digitizing Oscilloscope	Vertical Sensitivity: 1V/div Vertical input: 5V	Keysight 54111D or Keysight 54123T	F,T

1 F = Functional Verification Tests, T = Troubleshooting

Inspection/ Shipping

This section shows initial (incoming) inspection and shipping guidelines for the Keysight E 1406A Command Module.

Initial Inspection

Use the steps in Figure 1-3 as guidelines to perform initial (incoming) inspection of the command module.

WARNING **To avoid possible hazardous electrical shock, do not perform electrical tests if there are signs of shipping damage to the shipping container or to the instrument.**

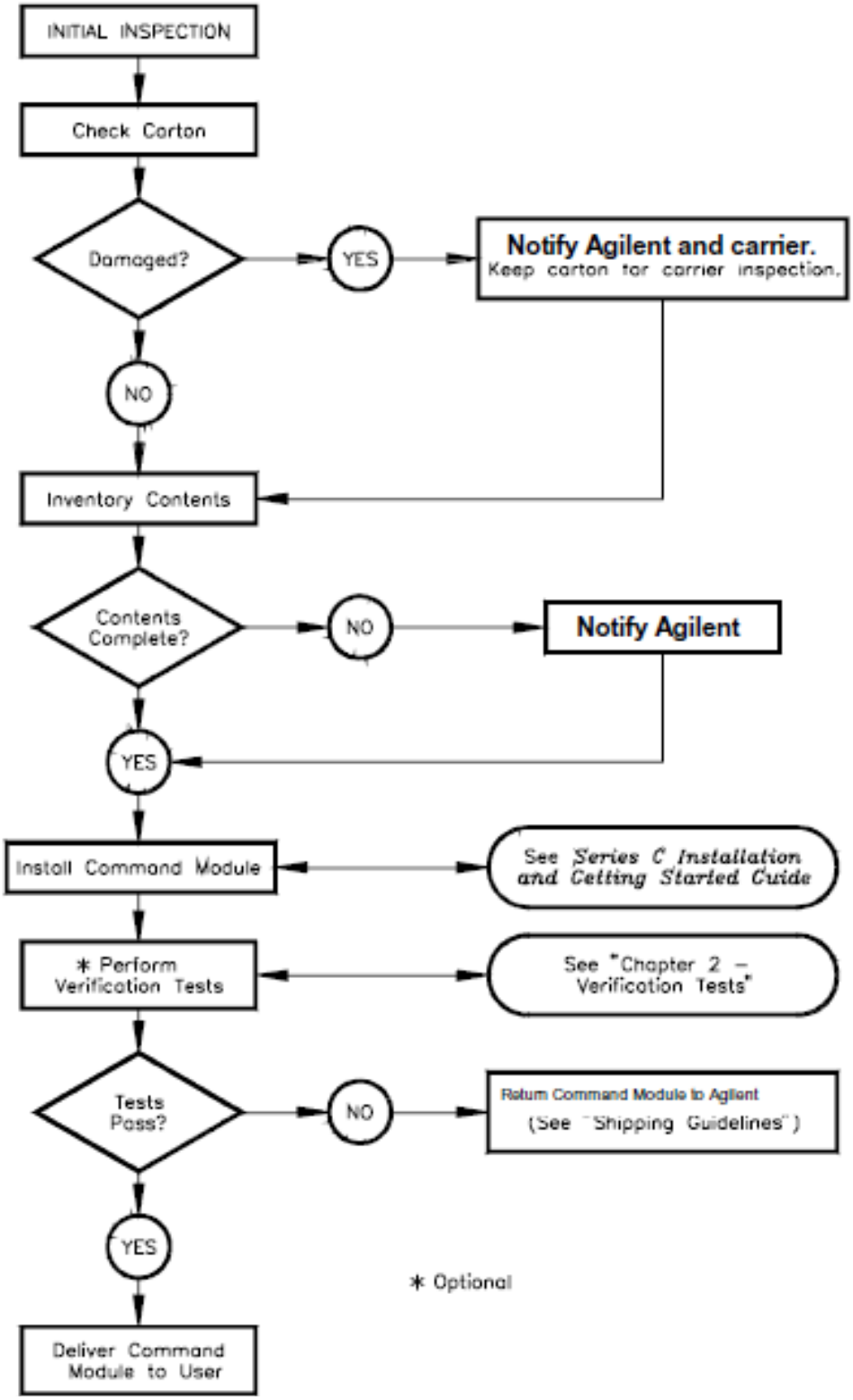

Figure 1-3 Initial (Incoming) Inspection Guidelines

Shipping Guidelines

Follow the steps in Figure 1-4 to return the command module to an Keysight Technologies Sales and Support Office or to a Service Center.

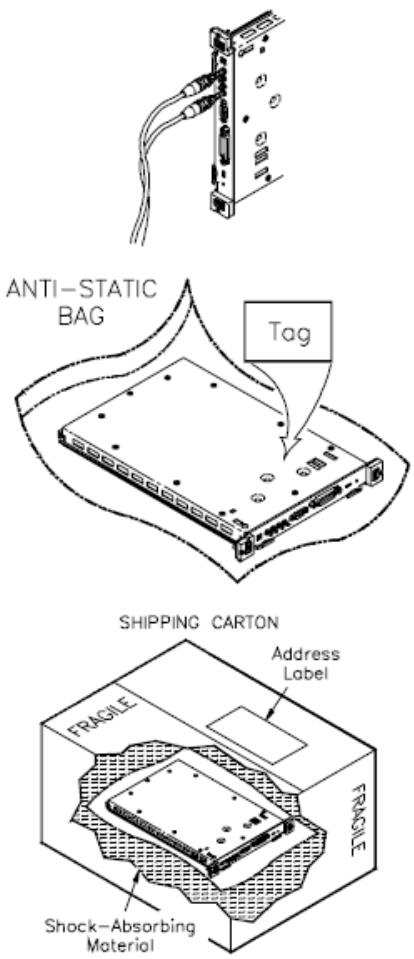

1 Remove Cables/Connectors

- Remove GPIB/RS-232 cables from command module
- Remove cables/connectors from command module front panel connectors

2 Prepare Command Module

- Attach tag to module that identifies
  - owner
  - Model Number/Serial Number
  - Service Required
- Place tagged device in anti-static bag

3 Package Module

- Place packaged module in shipping carton*
- Place 75 to 100 mm (3 to 4 inches) of shock-absorbing material around the module
- Seal the shipping carton securely
- Mark the shipping carton FRAGILE

4 Ship Module to Agilent Technologies

- Place address label on shipping carton
- Send carton to Agilent Technologies

Figure 1-4 Packaging/Shipping Guidelines

* We recommend you use the same shipping materials as those used in factory packaging (available from Keysight Technologies). For other (commercially-available) shipping materials, use a double-wall carton with minimum 2.4 MPa (350 psi) test.

2 Verification Tests

Introduction

This chapter describes Keysight E1406A Command Module self-tests and functional verification tests. There are no operation verification tests, performance verification tests, or user adjustments for the command module. Table 2-1 defines command module self-tests and functional verification tests and suggests when to use each type of test.

WARNING **Do not perform any of the verification tests in this chapter unless you are a qualified, service-trained person and have read the WARNINGS and CAUTIONS in Chapter 1.**

Table 2-1 Keysight E1406A Command Module Test Definitions

Title	Description	When to Use:
Self-Tests	Use power-on self-tests to verify that the command module is operational and is communicating with the computer.	When you want to verify operation and/or communication.
Functional Verification Tests	Gives a high probability that the command module is functional. These tests provide a PASS/FAIL result.	At incoming inspection, after module repair, or whenever faulty operation is suspected.

The test administrator must know command module and test equipment operation. It is assumed that a qualified, service-trained person will connect cables and adapters required. See Table 1-4, Keysight E1406A Command Module Recommended Test Equipment, for test equipment requirements.

Command Module Configuration

This section shows how to set an Keysight E1406A Command Module for factory settings, and summarizes basic command module functions. See the C-Size VXIbus Systems Configuration Guide for information on changing command module switch settings.

NOTE This section shows system configuration based on command module switch settings. These settings can be overridden by configuration tables stored in the command module. See the Keysight E1406A Command Module User's Manual for details.

Factory Settings

Table 2-2 shows how the command module is configured at the factory. Figure 2-1 shows the switch positions and locations for the command module factory settings.

Table 2-2 Command Module Switch Settings/Functions

Switch	Title	Range	Factory Setting	Function
1	(VME) System Controller Slot 0 Enable/Disable	Enabled (0)/ Disabled (1)	Enabled Enabled	When the (VME) System Controller and Slot 0 Enable/Disable switches are enabled, the command module functions as the system's Slot 0 device.
2	System Clock Source	Internal/ External	Internal	With Internal setting, the command module supplies the 10 MHz system clock (CLK10). With External setting, the clock must be supplied from an external source.
3	Bus Request Level	0 - 3	3	Setting Bus Request Level 3 gives the command module highest priority to request the use of the Data Transfer Bus.
4	Logical Address	0 - 240	00	Identifies the logical address of the command module. The secondary address of the command module is ALWAYS 00, regardless of the logical address setting.
5	Servant Area	1 - 255	255	Identifies the range of sequential logical addresses of the modules to be controlled by the command module.
6	Primary GPIB Address GPIB Controller	0 - 30 Enabled (1)/ Disabled (0)	09 Disabled	Identifies GPIB port on command module. Determines if command module is GPIB System Controller.

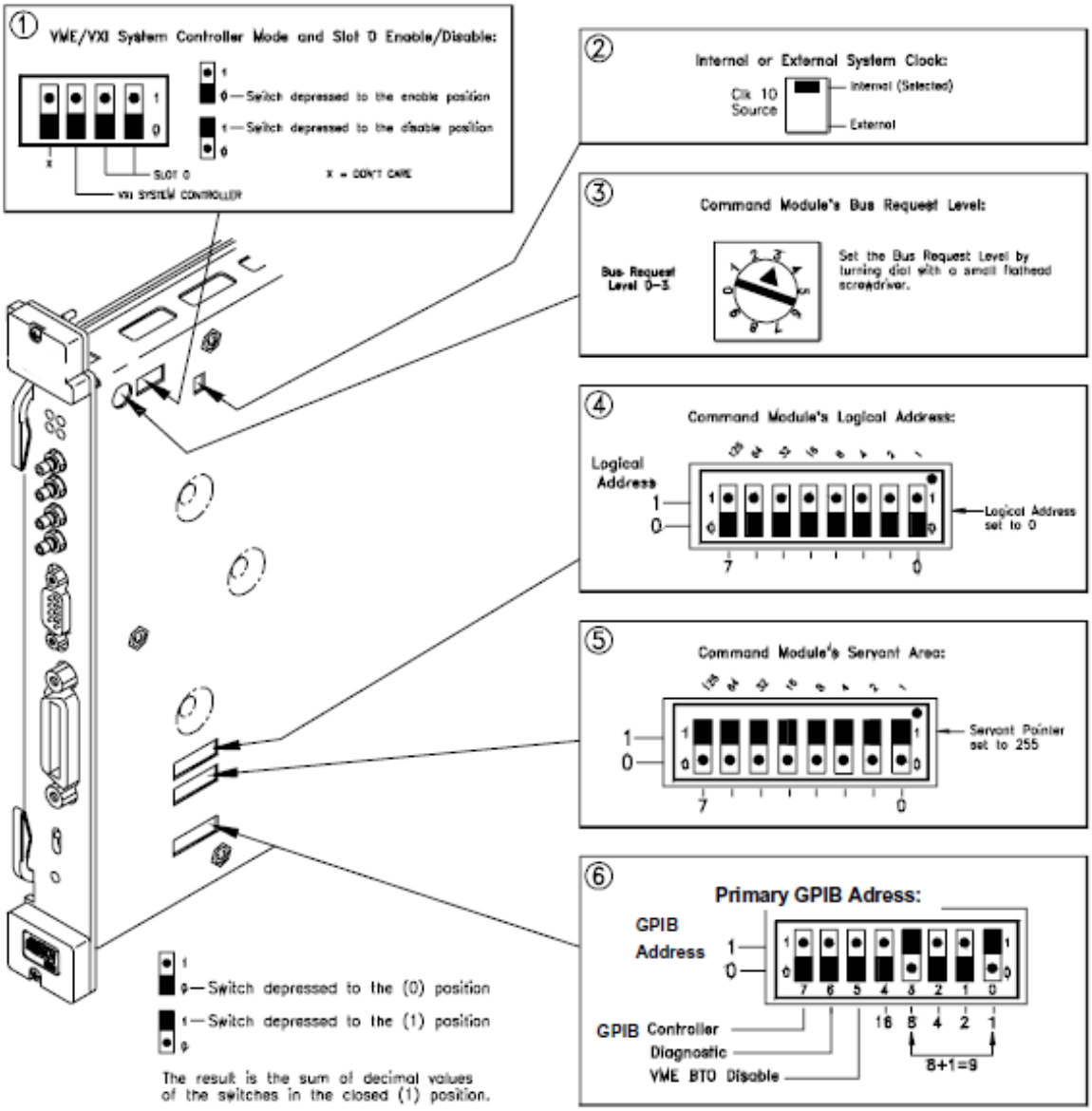

Figure 2-1 Command Module Switches - Factory Settings

NOTE Be sure switches are COMPLETELY seated in the proper position. Switches may appear to be in the correct position but may not be fully seated. One way to ensure that switches are seated is to listen for a “click” as you depress the switch.

Some Command Module Definitions

In this manual, the VXIbus “system” assumed is an external controller connected to a command module via GPIB, with the command module configured as the resource manager and the slot 0 device. The following paragraphs summarize some terms associated with the command module. See the C-Size VXIbus Systems Configuration Guide for details.

Resource Manager/Slot 0 Device

Every VXIbus system must have a device to provide the system’s resource manager and slot 0 requirements. The resource manager operates ONLY at power-on. Once the power-on sequence completes, the resource manager is no longer used. The resource manager:

- identifies all installed plug-in modules
- sets commander/servant hierarchies
- performs A24/A32 mapping
- allocates interrupt lines
- starts system operation

During operation, the slot 0 function is used to:

- identify module locations
- manage the data flow across backplane buses
- provide the (10 MHz) system clock.

NOTE **In VXIbus systems using an external controller, the Keysight E1406A Command Module should be configured as resource manager and slot 0 device.**

Logical Address/GPIB Address

For VXIbus systems, the Logical Address (set with the Logical Address Switch) is used to:

- determine device registers base address
- set a device as the system resource manager
- establish servant areas
- create instruments
- derive secondary GPIB addresses

The GPIB (IEEE-488) Address is used to address the device and consists of the following three parts:

- Interface Select Code (ISC) (typically 7)

- Primary GPIB address (set with the GPIB Address switch)
- Secondary GPIB address (derived from the Logical Address)

Instruments are located by the GPIB address. For example, Figure 2-2 shows a typical GPIB Address. The GPIB Primary Address is set with the GPIB Address switch (switch 6 in Figure 2-1). However, the GPIB Secondary Address is derived from the Logical Address switch setting using the relationship:

GPIB Secondary Address = Logical Address/8

Thus, in Figure 2-2, since Logical Address 64 is set (with the Logical Address switch), the GPIB Secondary Address = 64/8 = 08. Note that there are no switches to set the Secondary GPIB Address.

NOTE

The "divide logical address by 8" process to get the IEEE-488 secondary address is the Keysight implementation of VXIbus addressing using the Keysight E1406A command module. Other manufacturers may use different methods.

The GPIB Secondary Address for the Keysight E1406A command module is always 00, regardless of the logical address set.

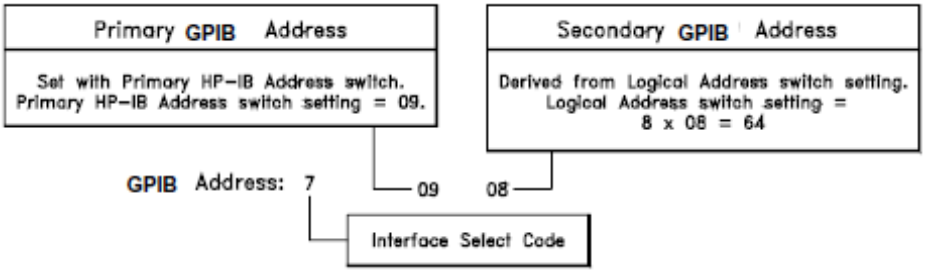

Figure 2-2 Example: GPIB Address vs Logical Address

Commander/Servant Areas

In a VXIbus system, the servant area identifies the modules (servants) that are controlled by other modules (commanders). The Logical Address

switch sets the command module as the resource manager and is used with the command module Servant Area switch (Switch 5 in Figure 2-1) to determine the servant area of the command module using:

Servant area = (Logical Address +1) through (Logical Address + Servant Area switch setting)

See Figure 2-3 for an example commander/servant hierarchy.

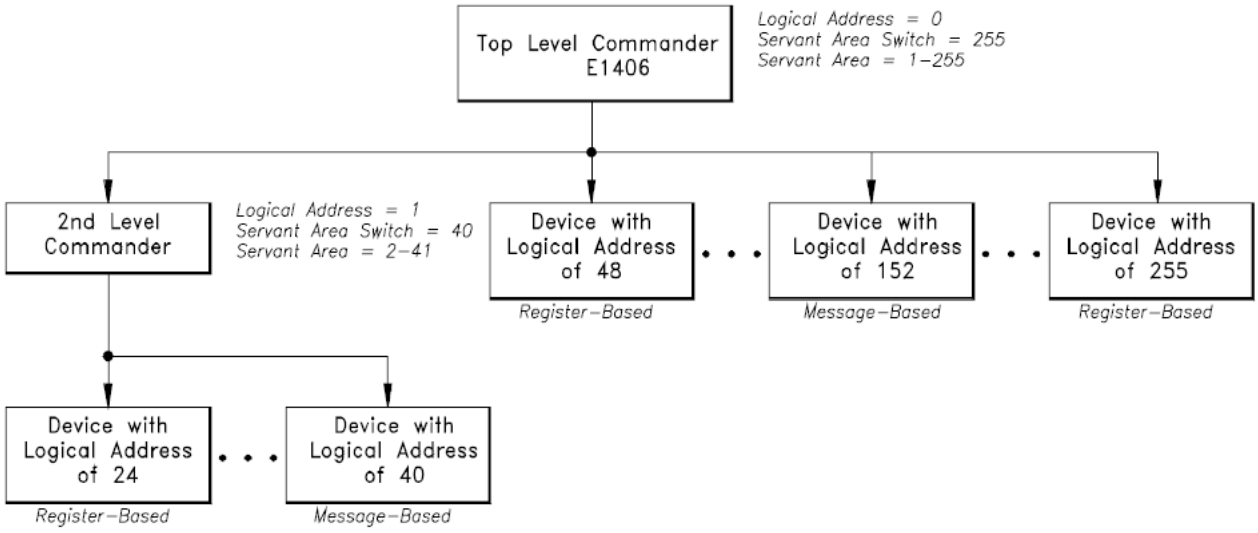

Figure 2-3 Example: Command/Servant Hierarchy

Command Module Self-Tests

This section shows how to perform Keysight E1406A Command Module self-tests using the GPIB power-on test and/or RS-232 power-on test. Either test is usually adequate to verify that a command module is operational. If a self-test fails, see Chapter 4 - Service for further tests/information.

NOTE **Unless otherwise instructed, the Run/Load switch should be in the Run position for all tests.**

Test S-1: GPIB Power-On Test

Description

This test uses the SYST:ERR? command for the command modules GPIB power-on test. A “+0, No error” return indicates the test passed.

Set up Equipment

- Turn mainframe power OFF
- Connect computer to mainframe (see Figure 2-4)
- · Turn mainframe power ON

NOTE **Refer to your computer’s documentation for information on connecting the keyboard and video cables and other peripherals.**

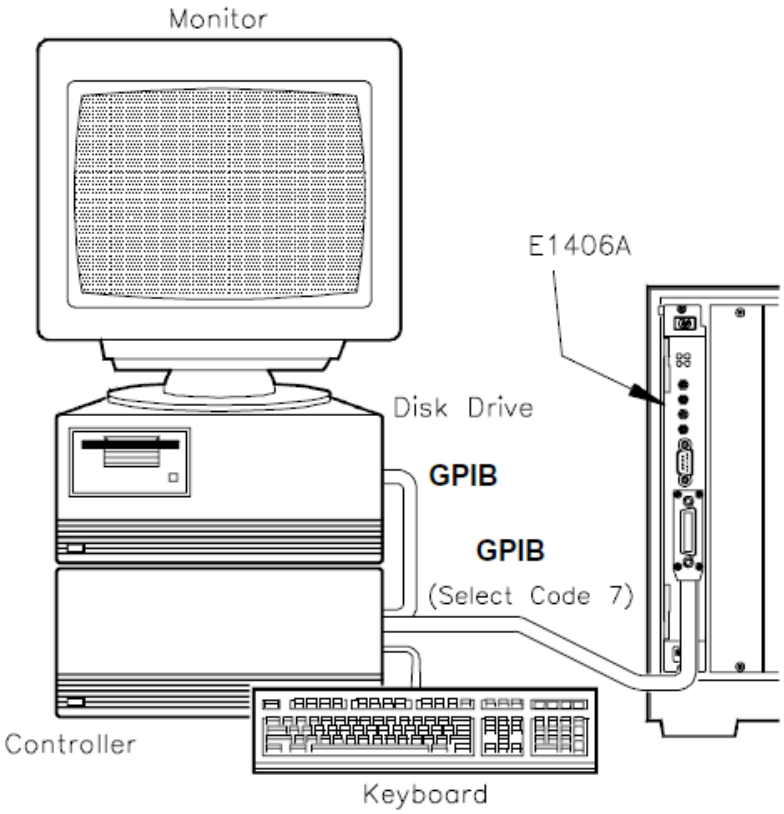

Figure 2-4 Test S-1: GPIB Power-On Test

Example Program

This program performs an GPIB power-on test for the Keysight E1406A command module and uses the SYST:ERR? command to check results. If the power-on test passes, +0,"No error" is returned. If the power-on test fails, the test returns an error message for each error detected. In this case, see Chapter 5 - Error Messages for an explanation of the error(s)

NOTE If the Ready light does not turn on and/or the Failed/SYSFAIL lights stay lit when power is turned ON, there is a very high probability that the command module is defective. In this case, this test will probably not run, and you should see Chapter 4 - Service for repair/replacement guidelines.

```
1!Test S-1: GPIB Power-On Self-Test
2!
10CLEAR SCREEN
20   ASSIGN @Addr to 70900
```

```
30DIM Err_msg$[256]
40PRINT “Test S-1: GPIB Power-On Self-Test”
50PRINT
60PRINT “This test checks for power-on errors in the command module.”
70PRINT “To perform this test:”
80PRINT
90PRINT “  1. Turn mainframe power OFF”
100 PRINT “  2. Remove all modules (except command module)
from mainframe”
110 PRINT “  3. Turn mainframe power ON”
120 PRINT “  4. Wait at least 5 seconds before running the test.”
130 DISP “ Press Continue to run the GPIB power-on test ”
140 PAUSE
150 CLEAR SCREEN
160 PRINT “GPIB Power-On Self-Test”
170 REPEAT
180OUTPUT @Addr;"SYST:ERR?"!Query for system errors
190ENTER @Addr;Err_msg$!Enter results
200PRINT Err_msg$!Display results
210 UNTIL Err_msg$="+0,""No error"""
220 END
```

Typical Result

A typical result for no power-on errors is:

GPIB Power-on Self-Test

+0, “No error”

Test S-2: RS-232 Power-On Self-Test

Description

This test checks the command module power-on and configuration sequence. The test requires an RS-232 terminal (such as an HP 700/94 or equivalent) connected to the RS-232 terminal of the command module.

The command module power-on sequence can be monitored on an RS-232 terminal (or printer) that is connected to the command module's RS-232 port. Pressing CTRL S on the terminal keyboard pauses the sequence, and pressing CTRL Q resumes the sequence. Once the sequence is paused, it remains paused until CTRL Q is pressed.

Set up Equipment

- Turn mainframe and terminal power OFF
- Connect RS-232 terminal to command module (see Figure 2-5)
- Turn mainframe and terminal power ON

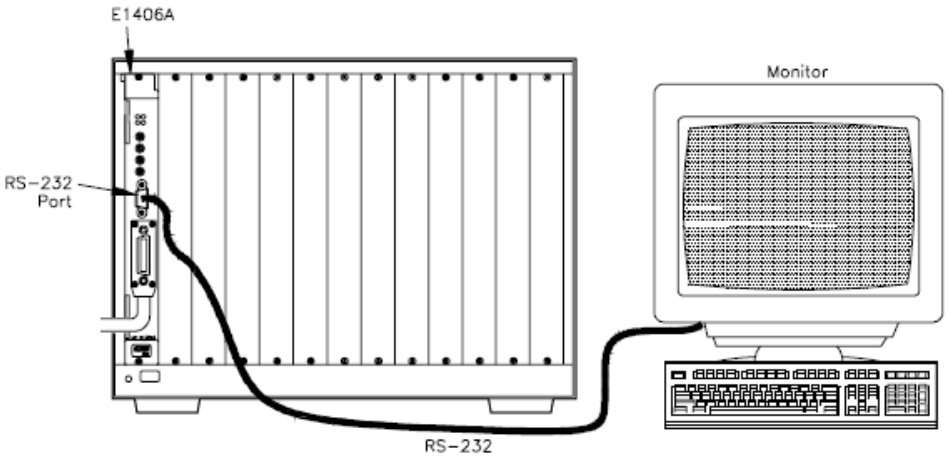

Figure 2-5 RS-232 Power-On Test

Typical Results

A typical power-on and configuration sequence for an Keysight E1406A Command Module follows. If a configuration or start-up error occurs, such as invalid address or failed self-test, the error is reported in the sequence. See Chapter 5 - Error Messages for error messages.

Keysight E1406A Command Module
Typical Resource Manager Configuration Sequence

1	Testing ROM Testing512K Bytes RAM Passed CPU Self Test Passed GPIB address: 09 Talk/Listen Command Module ladd = 0 Command Module servant area = 255 Command Module VME bus timeout = ENABLED
2	Searching for static devices in mainframe 0 SC Device at ladd 0 in slot 0 Searching for dynamic devices DC device in slot 12 moved to ladd 32, block size = 1 Searching for pseudo devices
3	Configuring Commander/Servant hierarchy ladd = 0, cmdr ladd = -1 ladd = 8, cmdr ladd = 0 ladd = 16, cmdr ladd = 0 ladd = 32, cmdr ladd = 24 ladd = 64, cmdr ladd = 24 Validating Commander/Servant hierarchy Commander ladd 24 granted device ladd 32 Commander ladd 24 granted device ladd 64
4	Mapping A24 Memory ladd 0, offset = 00200000H, size = 131072 (bytes) ladd 24, offset = 00220000H, size = 131072 (bytes) I add 64, offset = 00240000H, size = 131072 (bytes) Mapping A32 Memory
5	Configuring VME interrupts VME interrupt line 1 assigned to ladd 0, handler ID 1 VME interrupt line 2 assigned to ladd 24, handler ID 1 VME interrupt line 3 assigned to ladd 64, handler ID 1 VME interrupt line 4 - no handler assigned VME interrupt line 5 - no handler assigned VME interrupt line 6 - no handler assigned VME interrupt line 7 - no handler assigned

6	SYSTEM INSTALLED AT SECONDARY ADDR 0 VOLTMTR INSTALLED AT SECONDARY ADDR 1 SWITCH INSTALLED AT SECONDARY ADDR 2 MBinstr INSTALLED AT SECONDARY ADDR 3 SYSTEM instrument started BNO issued to ladd 24, BNO response = FFFE Opening GPIB access for message based device at sec addr 03

1 The Keysight E1406A operating system performs a series of self-tests and clears its volatile RAM. The command module's GPIB address, logical address, and servant area (based on the switch settings) are reported.

2 The resource manager identifies all statically configured modules, then locates and configures all dynamically configurable modules. The resource manager then searches for pseudo devices (such as IBASIC).

3 The resource manager establishes the VXIbus system's commander/servant hierarchies based on the commander's servant area and the servant's logical address.

4 The resource manager allocated A24 addresses to access the memory located on the modules at logical addresses 0, 24, and 64. Note that the offset is specified in hexadecimal and the size is specified in bytes. For this particular system, there are no A32 devices.

5 The resource manager allocates interrupt lines to itself and to the other interrupt handlers in the system.

6 The resource manager identifies the secondary GPIB addresses used in the system, starts the SYSTEM instrument (the command module), issues the Begin Normal Operation (BNO) command to its direct message based servant, and opens GPIB access to the module at secondary GPIB address 03.

Functional Verification Tests

This section describes functional verification tests for the Keysight E1406A Command Module. These (optional) tests can be used to check specific command module functions. Typically, functional verification tests are used after repair or whenever command module operation is questionable. Table 2-3 lists functional verification tests for the command modules.

Table 2-3 Command Module Functional Verification Tests

Test#	Test Title	Checks This Command Module/System Function
F-1	Front Panel Outputs	Checks outputs from the Trig Out Port and the Clk Out Port.
F-2	General System Information	Returns command module addresses, number of devices in the system, and system version, time, and date settings.
F-3	Hierarchy/Device Information	Returns hierarchy and static information for the module at the selected logical address.
F-4	Table/Memory Information	Returns information on Configuration Tables and command module memory including the Flash ROM.
F-5	Interrupt/Status Information	Returns information on command module interrupt lines and on register status.
F-6	Triggering Information	Returns information on ECLTrg and TTLTrg trigger line settings and on the Trig Out port configuration.
F-7	Serial Port Information	Returns information on the RS-232 serial port configuration.

Test F-1: Front Panel Outputs

Description

This test checks the output levels from the front panel Trig Out and Clk Out ports. There are four parts to the test, as follows. See Figure 2-6 for a summary of the trigger sources and paths for parts A, B, and C.

Part	Title	Description
A	INTernal Trigger Source Test	For this test, the Trig Out port level should start at +5V, then go to 0V for two seconds, and then go back to +5V.
B	TTL/ECL Trigger Line Source Test	Checks the Trig Out port output using each TTLTrg and ECLTrg trigger line as a trigger source. For each TTLTrg/ECLTrg trigger line, the Trig Out port level should start at +5V, then go to 0V for two seconds, then go back to +5V.
C	Trig In Port Source Test	Checks the Trig In and Trig Out ports on the command module, using the seven TTLTrg and two ECLTrg lines (in turn) to check input/output. For each TTLTrg/ECLTrg Trigger Line, the Trig Out Port level should start at +5V. When a TTL signal is applied to the Trig In port, the Trig Out port level should go to 0V and stay at 0V until the signal is removed from the Trig In port. Then, the Trig Out Port level should return +5V.
D	10 MHz Clk Out Signal Test	Checks the output from the Clk Out port on the command module front panel. The oscilloscope display should be a 5V pp square wave at 10 MHz (period = 0.1 ∝sec).

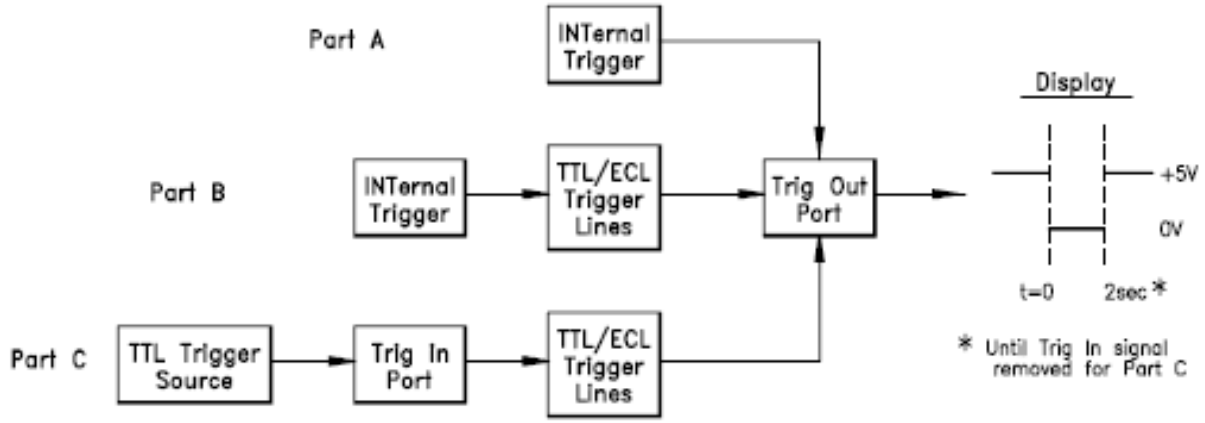

Figure 2-6 Trig Out Port Level Tests

Set up Equipment

- Turn mainframe power OFF
- Connect oscilloscope to command module (see Figure 2-7)
- Set up oscilloscope (see Figure 2-7)
- Turn mainframe power ON

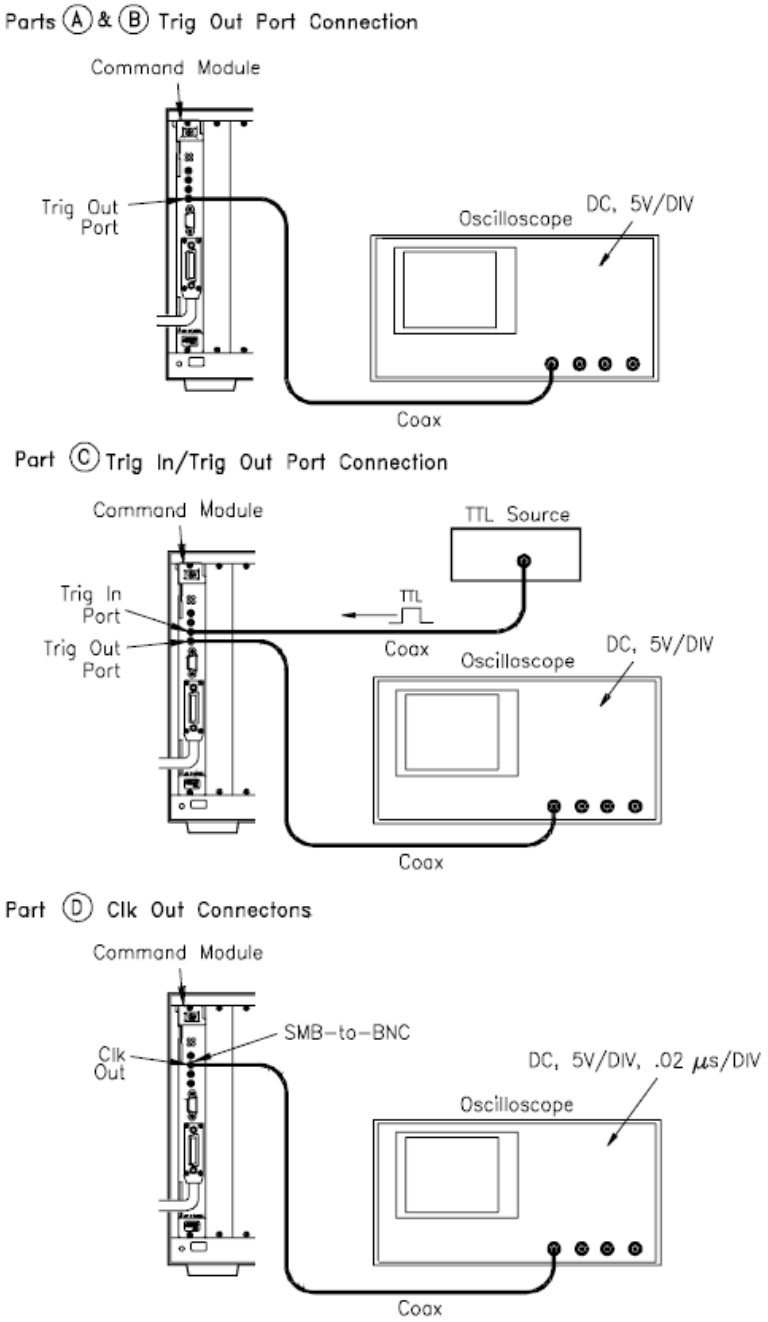

Figure 2-7 Test F-1: Front Panel Outputs Connections

Example Program

This program runs the three Trig Out tests and the Clk Out test described above.

```
1!Test F-1: Front Panel Outputs
2!
10ASSIGN @Addr to 70900!Assign @Addr to cmd module
20PRINT “Part A: INTernal Trigger Source Test”
30PRINT
40PRINT “Connect oscilloscope to command module Trig Out port”
50DISP “ Press Continue when ready to run this test ”
60PAUSE
70OUTPUT @Addr;"OUTP:EXT:STAT ON"!Enable Trig Out port
configuration
80OUTPUT @Addr;"OUTP:EXT:SOUR INT"!Set Trig Out trigger source
to INTernal
90OUTPUT @Addr;"OUTP:EXT:LEV ON"!Set Trig Out port level ON
100  WAIT 2!Wait 2 seconds
110  OUTPUT @Addr;"OUTP:EXT:LEV OFF"!Set Trig Out port level
OFF
120  CLEAR SCREEN
130  PRINT “Part B: TTL/ECL Trigger Line Source Test”
140  PRINT
150  PRINT “Connect oscilloscope to command module Trig Out
port”
160  DISP “ Press Continue when ready to run this test ”
170  PAUSE
180  CLEAR SCREEN
190  DIM Trg_sour$(9)[10]
200  DATA TTLT0,TTLT1,TTLT2,TTLT3,TTLT4!TTLTrg trigger lines
210  DATA TTLT5,TTLT6,TTLT7,ECLT0,ECLT1!TTLTrg/ECLTrg trigger
lines
220  READ Trg_sour$(*)!Read TTLTrg/ECLTrg trigger line data
230  FOR I=0 TO 9
240PRINT TABXY(1,18),"Trigger line being tested is:
“;Trg_sour$(I)
250OUTPUT @Addr;"OUTP:"&Trg_sour$(I)&":STAT ON"!Set
TTLTrg/ECLTrg line STATE ON
260OUTPUT @Addr;"OUTP:"&(Trg_sour$(I))&":SOUR INT"  !Set
TTLTrg/ECLTrg trig source to INT
270OUTPUT @Addr;"OUTP:EXT:STAT ON"!Enable Trig Out port
configuration
```

```
280OUTPUT @Addr;"OUTP:EXT:SOUR “;Trg_sour$(I)!Allows Trig Out
port to be driven by selected TTLTrg/ECLTrg trigger line
290OUTPUT @Addr;"OUTP:"&Trg_sour$(I)&":LEV ON"!Set selected
trigger line to ON
300WAIT 2!Wait 2 seconds
310OUTPUT @Addr;"OUTP:"&Trg_sour$(I)&":LEV OFF"!Set selected
trigger line to OFF
320DISP “ Press Continue to test next trigger line ”
330PAUSE
340CLEAR SCREEN
350  NEXT I
360  CLEAR SCREEN
370  PRINT “Part C: Trig In Port Source Test”
380  PRINT
390  PRINT “Connect oscilloscope to command module Trig Out
port”
400  DISP “ Press Continue when ready to run this test ”
410  PAUSE
420  CLEAR SCREEN
430  FOR I=0 TO 9
440OUTPUT @Addr;"OUTP:"&Trg_sour$(I)&":STAT ON"!Set
TTLTrg/ECLTrg line STATE ON
450OUTPUT @Addr;"OUTP:"&Trg_sour$(I)&":SOUR EXT"   !Set
selected TTLTrg/ECLTrg trigger source to EXTernal (Trig In
port)
460OUTPUT @Addr;"OUTP:EXT:STAT ON"!Enable Trig Out port
configuration
470OUTPUT @Addr;"OUTP:EXT:SOUR “;Trg_sour$(I)!Drive Trig Out
port with selected
TTLTrg/ECLTrg line
480PRINT “Trigger line being tested is: ”;Trg_sour$(I)
490PRINT
500PRINT “1. Apply +5V TTL signal to Trig In Port. Trig Out
level should go to 0V”
510PRINT “2. Remove signal from Trig In Port. Trig Out level
should go to +5V”
520DISP “ When completed, press Continue to test next trigger
line ”
530PAUSE
540CLEAR SCREEN
550  NEXT I
560  CLEAR SCREEN
```

```
570  PRINT “Part D: 10 MHz Clk Out Signal Test”
580  PRINT
590  PRINT “Connect oscilloscope to command module Clk Out
port”
600  DISP “ Press Continue when ready to run this test ”
610  PAUSE
620  CLEAR SCREEN
630  END
```

Typical Results

See Figure 2-6 for oscilloscope displays for Trig Out port tests (Parts A, B, and C). See Figure 2-8 for a typical display for the Clk Out port test (Part D).

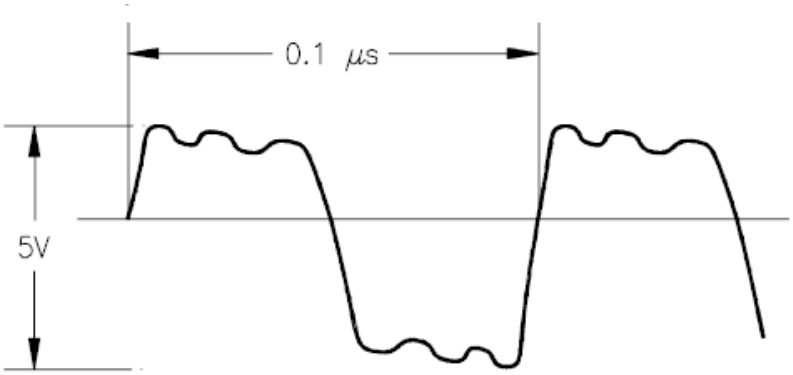

Figure 2-8 Typical Display - 10 MHz Clock Output

Test F-2: General System Information

Description

This test uses the following commands to return information on command module addresses, number of devices in the system, and system version, time, and date settings.

`SYST:COMM:GPIB:ADDR?`	Command module GPIB address
`VXI:CONF:DNUM?`	Number of devices in the system
`VXI:CONF:LADD?`	Device logical addresses
`SYST:VERS?`	SCPI version for compliance
`SYST:DATE?`	Current date setting
`SYST:TIME?`	Current time setting

Set up Equipment

- Turn mainframe power OFF
- Connect computer to command module (see Figure 2-9)
- Turn mainframe power ON

Example Program

This program returns the current settings for command module addresses, number of devices in the system, and system version, time, and date settings.

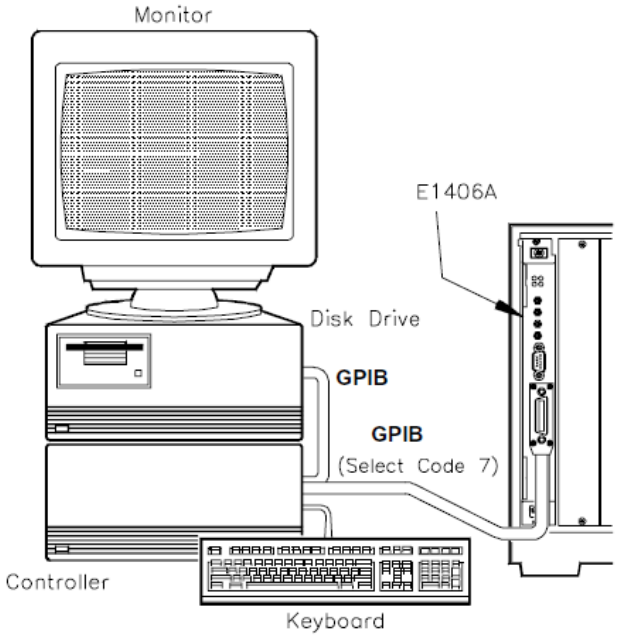

Figure 2-9 Test F-2. General System Information

```
1!Test F-2: General System Information
2!
10ASSIGN @Addr to 70900!Assign @Addr to cmd module
20DIM Ladds$[256]!Dimension Logical Address storage
30OUTPUT @Addr;"SYST:COMM:GPIB:ADDR?"!Query GPIB address
40ENTER @Addr;Cmd_addr
50OUTPUT @Addr;"VXI:CONF:DNUM?"!Query number of modules
installed
60ENTER @Addr;Dnum
70OUTPUT @Addr;"VXI:CONF:LADD?"!Query device Logical Addresses
80ENTER @Addr;Ladds$
90OUTPUT @Addr;"SYST:VERS?"!Query version for SCPI compliance
100ENTER @Addr;Vers$
110OUTPUT @Addr;"SYST:DATE?"!Query current date setting
120ENTER @Addr;Syst_date$
130OUTPUT @Addr;"SYST:TIME?"!Query current time setting
140ENTER @Addr;Syst_time$
150PRINT “Test F-2: General System Information”
160PRINT
170PRINT “  - Command module GPIB address”;Cmd_addr
180PRINT “ - Number of devices in the system ”;Dnum
190 PRINT “ - Device logical addresses ”;Ladds$
200 PRINT “ - SCPI version for compliance ”;Vers$
210 PRINT “ - Current date setting ”;Syst_date$
220 PRINT “ - Current time setting ”;Syst_time$
230 END
```

Typical Results

A typical result with ONLY an Keysight E1406A Command Module installed in the mainframe follows. The date shown is 14 Jan 1993, and the time shown is 13:52:20 (1:52:20 P.M.).

```
Test F-2: General System Information
- Command module GPIB address 9
- Number of devices in the system 1
- Device logical addresses +0
- SCPI version for compliance 1990.0
- Current date setting +1993,+1,+14
- Current time setting +13,+52,+20
```

Test F-3: Hierarchy/Device Information

Description

This test uses VXI:CONF:HIER? and VXI:CONF:INF? to return current hierarchy configuration and static information for the module at the logical address you select. The information returned by each command follows. See the Keysight E1406A Command Module User's Manual for details on each entry.

NOTE If an error message is displayed in the "Manufacturer's Comments" line, see Chapter 5 - Error Messages for error description.

VXI:CONFigure:HIERarchy? Command returns (for a device at a specified logical address):

Item	Description/Range	Notes
Logical address	Integer between -1 and 255	-1 = device has no logical address
Commander's logical address	Integer between -1 and 255	-1 = device has no commander or commander is unknown
Interrupt handlers	Comma-separated list of 7 integers between 0 and 7	Interrupt lines 1-7 are mapped to returns. 0 = this interrupt handler is not configured.
Interrupters	Comma-separated list of 7 integers between 0 and 7	Interrupt lines 1-7 are mapped to individual returns. 0 = this interrupter not configured.
Pass/Failed	Integer from 0 to 3	0 = FAIL, 1 = IFAIL, 2 = PASS, 3 =READY
Manufacturer's specific comments	80-character string containing instrument name and secondary address UNLESS start-up error(s) detected.	For start-up errors, return has form "CNFG ERROR: n, m, ...,z". See Chapter 5 for error descriptions.

VXI:CONFigure:INFormation? Command returns (for a device at a specified logical address):

Item	Description/Range	Notes
Logical Address	Integer between -1 and 255	-1 = device has no logical address
Manufacturer ID	Integer between -1 and 4095	-1 = device has no Manufacturer ID
Model Code	Integer between -1 and 65535	-1 = device has no Model Code

Device Class	Integer between 0 and 5	0 = VXIbus memory device 1 = VXIbus extended device 2 = VXIbus message based device 3 = VXIbus register based device 4 = hybrid device 5 = Non-VXIbus device
Address Space	Integer from 0 to 15 (Integer value is sum of binary weighted codes of the address space occupied by device)	1 = device has A16 registers 2 = device has A24 registers 4 = device has A32 registers 8 = device has A64 registers
A16 Memory Offset	Integer between -1 and 65535	Base address for A16 registers on device. -1 = device has no A16 memory
A24 Memory Offset	Integer between -1 and 16777215	Base address for A24 registers on device. -1 = device has no A24 memory
A32 Memory Offset	Integer between -1 and 4294967295	Base address for A32 registers on device. -1 = device has no A32 memory
A16 Memory Size	Integer between -1 and 65535	Number of bytes reserved for A16 registers. -1 = device has no A24 memory
A24 Memory Size	Integer between -1 and 16777215	Number of bytes reserved for A24 registers. -1 = device has no A16 memory
A32 Memory Size	Integer between -1 and 4294967295	Number of bytes reserved for A32 registers. -1 = device has no A32 memory
Slot Number	Integer between -1 and the number of slots in mainframe	-1 = slot that contains this device is unknown
Slot 0 Logical Address	Integer between -1 and 255	-1 = Slot 0 device associated with this device is unknown
Subclass Register	Integer representing the subclass register contents	-1 = Subclass register not defined for this device
Attribute Register	Integer representing the attribute register contents	-1 = Attribute register not defined for this device
Manufacturer's specific comments	80-character string containing instrument name and secondary address UNLESS start-up error(s) are detected.	For start-up errors, return has form "CNFG ERROR: n, m, ...,z". See Chapter 5 for error descriptions.

Set up Equipment·

- Turn mainframe power OFF
- Connect computer to command module (see Figure 2-10)
- Turn mainframe power ON

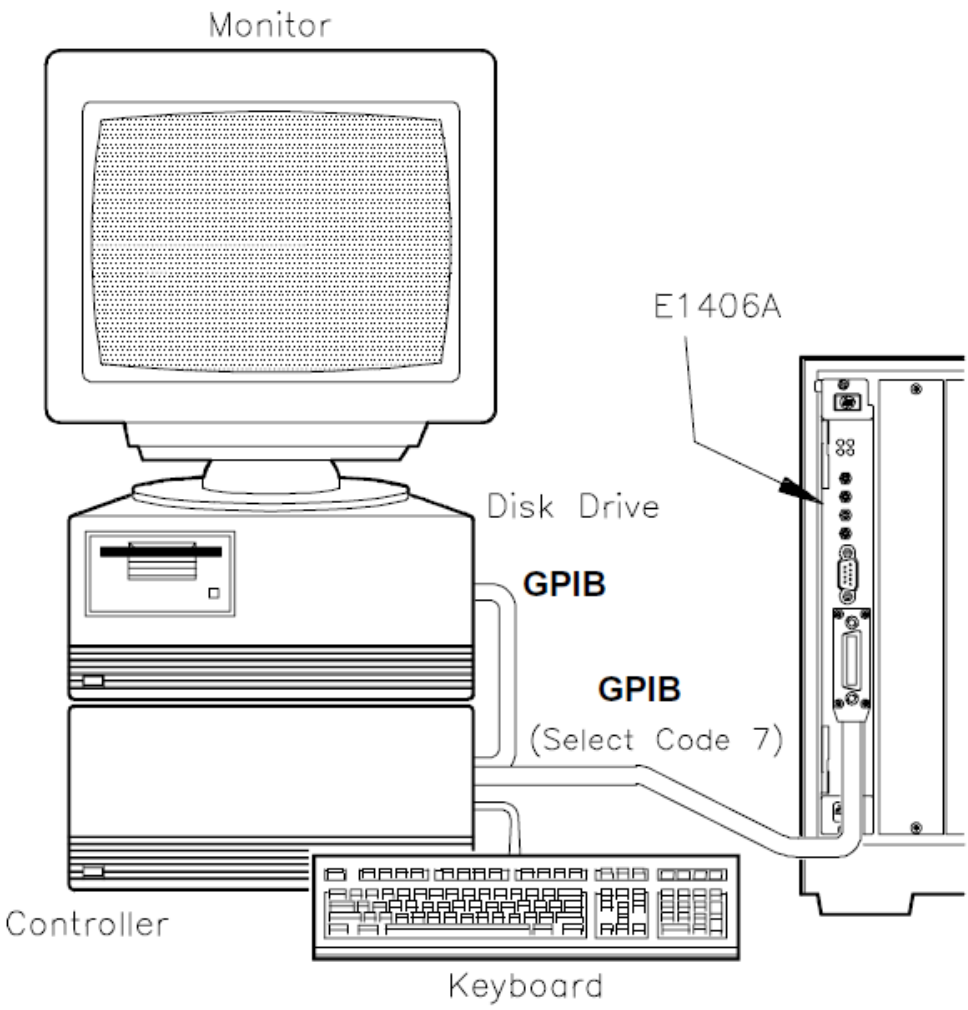

Figure 2-10 Test F-3: Hierarchy Info Connections

Example Program

This program uses VXI:CONF:HIER? and VXI:CONF:INF? to return current hierarchy configuration and static information for the module at the logical address you select.

```
1!Test F-3: Hierarchy/Device Information
2!
3!————————————- Query system Logical Addresses ————————
10ASSIGN @Addr TO 70900!Assign @Addr to cmd module
20CLEAR SCREEN
```

```
30DIM Rinf$(16)[50],Hinf$(18)[50], Hier$[1000],Inf$[1000]
!Dimension storage variables
40OUTPUT @Addr;"*RST"!Reset cmd module
50OUTPUT @Addr;"VXI:CONF:LADD?"!Query system Logical Addresses
60ENTER @Addr;Laddr$
70PRINT TABXY(1,18),"System Logical Addresses are: “;Laddr$
80INPUT “ Enter Logical Address of module to check. Then, press
Continue. ”,Laddr
90CLEAR SCREEN !Select Logical Address for module to be tested
91!————————————- Use VXI:CONF:HIER? Command————————-
100 OUTPUT @Addr;"VXI:SEL “;VAL$(Laddr) !Use module at selected
Logical Address
110 OUTPUT @Addr;"VXI:CONF:HIER?" !Query module at sel Logical
Address
120 ENTER @Addr;Hier$
130 INTEGER Scn1,Fnd1
140 Scn1 =1
150 FOR I =1 TO 17 STEP Scn1 !Loop to find individual values
160 Fnd1 =POS(Hier$[Scn1],",")
170 Hinf$(I) =Hier$[Scn1;Fnd1-1]
180 Scn1 =Scn1+Fnd1
190 NEXT I
200 PRINT “VXI:CONF:HIER? Command Results”
210 PRINT
220 PRINT “  - Logical Address:”;Hinf$(1)
230PRINT “  - Commander’s Logical Address:”;Hinf$(2)
240 PRINT “ - Interrupt Handler 1: ”;Hinf$(3)
250 PRINT “ - Interrupt Handler 2: ”;Hinf$(4)
260 PRINT “ - Interrupt Handler 3: ”;Hinf$(5)
270 PRINT “ - Interrupt Handler 4: ”;Hinf$(6)
280 PRINT “ - Interrupt Handler 5: ”;Hinf$(7)
290 PRINT “ - Interrupt Handler 6: ”;Hinf$(8)
300 PRINT “ - Interrupt Handler 7: ”;Hinf$(9)
310 PRINT “ - Interrupter 1: ”;Hinf$(10)
320 PRINT “ - Interrupter 2: ”;Hinf$(11)
330 PRINT “ - Interrupter 3: ”;Hinf$(12)
340 PRINT “ - Interrupter 4: ”;Hinf$(13)
350 PRINT “ - Interrupter 5: ”;Hinf$(14)
360 PRINT “ - Interrupter 6: ”;Hinf$(15)
370 PRINT “ - Interrupter 7: ”;Hinf$(16)
```

```
380 PRINT “ - Pass/Failed: ”;Hinf$(17)
390PRINT “  - Manufacturer’s Comments: ”;Hier$[Scn1]
400DISP “ Record results as desired. Then, press Continue for
VXI:CONF:INF? results. ”
410PAUSE
420CLEAR SCREEN
421! ————————-Use VXI:CONF:INF? Command ——————
430OUTPUT @Addr;"VXI:CONF:INF?"!Query module at sel Logical
Address
440ENTER 70900;Inf$
450INTEGER Scn,Fnd
460Scn=1
470FOR I=1 TO 15 STEP Scn!Loop to find individual values
480Fnd=POS(Inf$[Scn],",")
490Rinf$(I)=Inf$[Scn;Fnd-1]
500Scn=Scn+Fnd
510NEXT I
520PRINT “VXI:CONF:INF? Command Results”
530PRINT
540 PRINT “ - Logical Address: ”;Rinf$(1)
550 PRINT “ - Manufacturer ID: ”;Rinf$(2)
560 PRINT “ - Model Code: ”;Rinf$(3)
570 PRINT “ - Device Class: ”;Rinf$(4)
580 PRINT “ - Address Space: ”;Rinf$(5)
590 PRINT “ - A16 Memory Offset: ”;Rinf$(6)
600 PRINT “ - A24 Memory Offset: ”;Rinf$(7)
610 PRINT “ - A32 Memory Offset: ”;Rinf$(8)
620 PRINT “ - A16 Memory Size: ”;Rinf$(9)
630 PRINT “ - A24 Memory Size: ”;Rinf$(10)
640 PRINT “ - A32 Memory Size: ”;Rinf$(11)
650 PRINT “ - Slot Number: ”;Rinf$(12)
660 PRINT “ - Slot 0 Logical Address: ”;Rinf$(13)
670 PRINT “ - Subclass Register Contents: ”;Rinf$(14)
680 PRINT “ - Attribute Register Contents: ”;Rinf$(15)
690 PRINT “ - Manufacturer’s Comments: ”;Inf$[Scn]
700 END
```

Typical Results

The following tables show typical results for a command module at Logical Address 0, with the command module being the only module installed in the mainframe.

NOTE

If the information about the selected logical address is not available (i.e., the requested device is not in the mainframe or in the command module's servant area), Error -224 ("parameter error") is set and no data is returned.

Modules that are part of a combined instrument, such as a switch box, will return the same manufacturer's comments as the first module in the instrument. Other field information corresponds to the module at the selected address.

VXI:CONF:HIER? Command Results

```
- Logical Address:                  +0
- Commander's Logical Address:      - 1 (device has no commander)
- Interrupt Handler 1:              +0 (handler is not configured)
- Interrupt Handler 2:              +0
- Interrupt Handler 3:              +0
- Interrupt Handler 4:              +0
- Interrupt Handler 5:              +0
- Interrupt Handler 6:              +0
- Interrupt Handler 7:              +0
- Interrupter 1:                    +0 (interrupter is not
    configured)
- Interrupter 2:                    +0
- Interrupter 3:                    +0
- Interrupter 4:                    +0
- Interrupter 5:                    +0
- Interrupter 6:                    +0
- Interrupter 7:                    +0
- Pass/Failed:                      +3 (READY)
- Manufacturer's Comments:          "SYSTEM INSTALLED AT SECONDARY
    ADDR 0"
```

VXI:CONF:INF? Command Results

```
- Logical Address:                  +0
- Manufacturer ID:                  +4095 (Keysight Technologies is
    manufacturer)
- Model Code:                       +20   (20 =E1406 Command Module
    Code)
- Device Class:                     +2    (VXIbus message based
    device)
- Address Space:                    +3    (device has A16 and A24
    registers)
- A16 Memory Offset:                - 1   (device has no A16
    memory)
- A24 Memory Offset:                +2097152   (A24 registers base
    address)
- A32 Memory Offset:                - 1   (device has no A32
    memory)
- A16 Memory Size:                  - 1   (device has no A16
    memory)
- A24 Memory Size:                  +131072    (number of bytes
    reserved for A24 registers)
- A32 Memory Size:                  - 1   (device has no A32
    memory)
- Slot Number:                      +0
- Slot 0 Logical Address:           +0
- Subclass Register Contents:       - 1   (subclass register not
    defined for this device)
- Attribute Register Contents:      - 1   (attribute register not
    defined for this device)
- Manufacturer’s Comments: "SYSTEM INSTALLED AT SECONDARY ADDR 0"
```

Test F-4: Table/Memory Information

Description

This test uses the following commands to return information on command module Configuration Table addresses and memory addresses/sizes. See Chapter 2 in the Keysight E1406A Command Module User's Manual for Configuration Table definitions. See Chapter 5 in the Keysight E1406A Command Module User's Manual for command module memory configuration.

Configuration Table Addresses

```
VXI:CONF:CTAB?   Commander/Servant Hierarchy Table Address
VXI:CONF:DCT?    Dynamic Configuration Table Address
VXI:CONF:ETAB?   Extender Device Table Address
VXI:CONF:ITAB?   Interrupt Line Allocation Table Address
VXI:CONF:MTAB?   A24/A32 Address Allocation Table Address
```

Command Module Memory Addresses/Sizes

```
DIAG:NRAM:ADDR?     NRAM starting address
DIAG:NRAM:CRE?      Current NRAM size (bytes)
DIAG:NRAM:CRE? MAX  Maximum NRAM size (bytes)
DIAG:RDIS:ADDR?     RDISK starting address
DIAG:RDIS:CRE?      Current RDISK size (bytes)
DIAG:RDIS:CRE? MAX  Maximum RDISK size (bytes)
DIAG:DRAM:AVA?      Remaining DRAM available (bytes)
DIAG:DRAM:CRE?      DRAM size (bytes)/no. drivers
DIAG:DRIV:LIST?     Drivers installed (in ROM/RAM)
DIAG:FROM:AVA? Remaining  Flash ROM available (bytes) for
drivers
DIAG:FROM:SIZE?     Determine size of flash ROM
DIAG:FROM:CRE?      Returns maximum number of drivers in a
Flash ROM
```

Set Up Equipment

- Turn Mainframe Power OFF
- Connect computer to Command Module (see Figure 2-11)
- Turn Mainframe Power ON

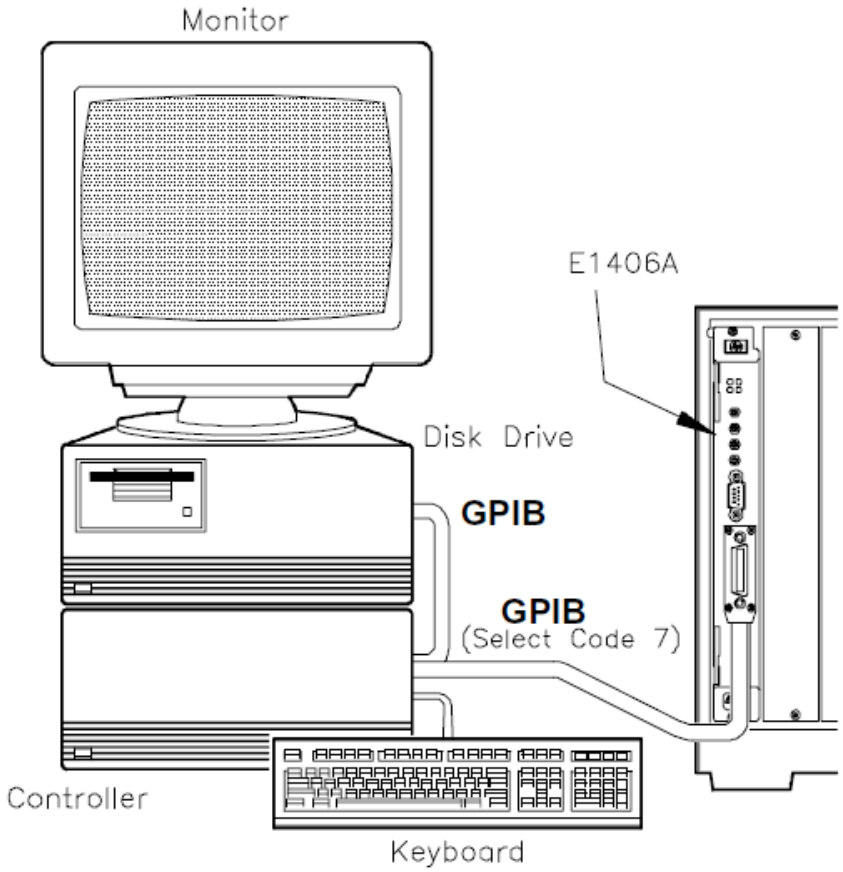

Figure 2-11 Test F-4: Table/Memory Info Connections

Example Program

This program uses the commands listed in the Description section to return information on Command Module Configuration Table addresses and memory addresses/sizes.

```
1!Test F-4: Table/Memory Information
2!
3! ————————- Get Configuration Table Information ——————————-
10 ASSIGN @Addr to 70900 !Assign @Addr to cmd module
20 DIM Dvr_list$[1000]
30  OUTPUT @Addr;"VXI:CONF:CTAB?" !Cmdr/servant hierarchy table address
40 ENTER @Addr;Ctab$
50 OUTPUT @Addr;"VXI:CONF:DCT?" !Dynamic Configuration Table address
60 ENTER @Addr;Dtab$
70  OUTPUT @Addr;"VXI:CONF:ETAB?" !Extender Device Table address
```

```
80 ENTER @Addr;Etab$
90 OUTPUT @Addr;"VXI:CONF:ITAB?" !Interrupt Line Allocation Table address
100 ENTER @Addr;Itab$
101 ! ————————————- Get Comman d Module Memory Information
————————————-
110 OUTPUT @Addr;"VXI:CONF:MTAB?" !A24/A32 Address Alloc Table address
120 ENTER @Addr;Mtab$
130 OUTPUT @Addr;"DIAG:NRAM:ADDR?" !NRAM starting address
140 ENTER @Addr;Nram_addr$
150 OUTPUT @Addr;"DIAG:NRAM:CRE?" !Current NRAM size (bytes)
160 ENTER @Addr;Nram_cre$
170 OUTPUT @Addr;"DIAG:NRAM:CRE? MAX" !Maximum NRAM size (bytes)
180 ENTER @Addr;Nram_max$
190 OUTPUT @Addr;"DIAG:RDIS:ADDR?" !RDISK starting address
200 ENTER @Addr;Rdis_addr$
210 OUTPUT @Addr;"DIAG:RDIS:CRE?" !Current RDISK size (bytes)
220 ENTER @Addr;Rdis_cre$
230 OUTPUT @Addr;"DIAG:RDIS:CRE? MAX" !Maximum RDISK size (bytes)
240 ENTER @Addr;Rdis_max$
250 OUTPUT @Addr;"DIAG:DRAM:AVA?" !Remaining DRAM available (bytes)
260 ENTER @Addr;Dram$
270 OUTPUT @Addr;"DIAG:DRAM:CRE?" !Current DRAM size (bytes)/no. drivers
280 ENTER @Addr;Dram_cre$
290 OUTPUT @Addr;"DIAG:DRIV:LIST?" !Drivers installed in ROM/RAM
300 ENTER @Addr;Dvr_list$
301!————————— Display Results ——————————————-
310PRINT “Test F-4: Table/Memory Information”
320PRINT
330PRINT “Configuration Tables”
340PRINT
350PRINT “  - Commander/Servant Hierarchy Table Address:
”;Ctab$
360PRINT “  - Dynamic Configuration Table Address:”;Dtab$
370PRINT “  - Extender Device Table Address:”;Etab$
380PRINT “  - Interrupt Line Allocation Table Address:”;Itab$
390PRINT “  - A24/A32 Address Allocation Table Address:”;Mtab$
400PRINT
410PRINT “Command Module Memory”
420PRINT
430PRINT “  - NRAM starting address:”;Nram_addr$
```

```
440PRINT “  - Current NRAM size (bytes):”;Nram_cre$
450PRINT “  - Maximum NRAM size (bytes):”;Nram_max$
460PRINT “  - RDISK starting address:”;Rdis_addr$
470PRINT “  - Current RDISK size (bytes):”;Rdis_cre$
480PRINT “  - Maximum RDISK size (bytes):”;Rdis_max$
490PRINT “  - Remaining DRAM avail (bytes):”;Dram$
500PRINT “  - DRAM size (bytes)/no. drivers:”;Dram_cre$
510PRINT “  - Drivers Installed (in ROM/RAM):”
520INTEGER Scan,Found
530Scan=1
540REPEAT
550Found=POS(Dvr_list$[Scan],";")
560IF Found THEN
570PRINT “   ->”;TAB(9);Dvr_list$[Scan;Found-1]
580Scan=Scan+Found
590ELSE
600END IF
610UNTIL NOT Found
620PRINT “->”;TAB(9);Dvr_list$[Scan;Scan+50]
630PRINT
640PRINT
650PRINT
660PRINT “TESTING FLASH ROM”
670PRINT
680 PRINT “Step 1.  Turn OFF the mainframe.”
681  PRINT “Step 2. Put the Run/Load Switch on the Keysight
E1406A Command Module in the LOAD position.”
682 PRINT “Step 3. Turn on the Mainframe.”
683 PRINT “Step 4. Press CONTINUE on the computer to continue
program execution."
690 PAUSE
700 WAIT 5
710 OUTPUT @Addr;"DIAG:FROM:CRE 0"! Set Flash ROM space to 0
720  CLEAR SCREEN
730 PRINT “Step 5. Turn OFF the mainframe.”
740  PRINT “Step 6. Put the Run/Load Switch on the Keysight
E1406A Command Module in the RUN position.”
750 PRINT “Step 7. Turn on the Mainframe.”
760 PRINT “Step 8. Press CONTINUE on the computer to continue
program execution."
```

```
770 PAUSE
780 WAIT 5
790 OUTPUT @Addr;"DIAG:FROM:AVA?"! Flash ROM Available
800 ENTER @Addr; Fava$
810 OUTPUT @Addr;"DIAG:FROM:SIZE?"! Flash ROM Size
820 ENTER @Addr;Fsize$
830 OUTPUT @Addr;"DIAG:FROM:CRE?"! Flash ROM Created
840 ENTER @Addr;Fcre$
850 PRINT “Flash ROM Space set to 0.”
860 PRINT
870 PRINT “Flash ROM Available: ”;Fava$
880 PRINT “Flash ROM Size: ”;Fsize$
890 PRINT “Flash ROM Created for Drivers: ”;Fcre$
900 PRINT
910 PRINT
920 PRINT “Step 9. Turn OFF the mainframe.”
930  PRINT “Step 10. Put the Run/Load Switch on the Keysight
E1406A Command Module in the LOAD position.”
940 PRINT “Step 11. Turn ON the Mainframe.”
950 PRINT “Step 12. Press CONTINUE to continue program
execution.”
960 PAUSE
970 WAIT 5
980 OUTPUT @Addr;"DIAG:FROM:CRE 64"! Set FLash ROM to Max for
Drivers
990  CLEAR SCREEN
1000 PRINT “Step 5. Turn OFF the mainframe.”
1010  PRINT “Step 6. Put the Run/Load Switch on the Keysight
E1406A Command Module in the RUN position.”
1020 PRINT “Step 7. Turn ON the Mainframe.”
1030 PRINT “Step 8. Press CONTINUE to continue program
execution.”
1040 PAUSE
1050 WAIT 5
1060 OUTPUT @Addr;"DIAG:FROM:AVA?"! Flash ROM Available
1070 ENTER @Addr; Fava$
1080 OUTPUT @Addr;"DIAG:FROM:SIZE?"! Flash ROM Size
1090 ENTER @Addr;Fsize$
1100 OUTPUT @Addr;"DIAG:FROM:CRE?"! Flash ROM Created
1110 ENTER @Addr;Fcre$
```

```
1120 PRINT “Flash ROM set to maximum”
1130 PRINT
1140 PRINT “Flash Rom Available: ”;Fava$
1150 PRINT “Flash Rom Size: ”;Fsize$
1160 PRINT “Flash Rom Created for Drivers: ”;Fcre$
1170 END
```

Typical Results

Typical results follow for a command module ONLY installed in the mainframe (this does not show the step instructions).

```
Test F-4: Table/Memory Information
Configuration Tables
    - Commander/Servant Hierarchy Table Address:    +0
    - Dynamic Configuration Table Address:          +0
    - Extender Device Table Address:                +0
    - Interrupt Line Allocation Table Address:      +0
    - A24/A32 Address Allocation Table Address:     +0
Command Module Memory
    - NRAM starting address:                        +0
    - Current NRAM size (bytes):                    +0
    - Maximum NRAM size (bytes):                    +485012
    - RDISK starting address:                       +0
    - Current RDISK size (bytes):                   +0
    - Maximum RDISK size (bytes):                   +485012
    - Remaining DRAM available (bytes):             +0
    - DRAM size (bytes)/no. drivers:                +0,+0
    - Drivers installed (in ROM/RAM):*
        -> SYSTEM,E1406A,A.09.00,ROM
        -> UNKNOWN,UNKNOWN,0,ROM
        -> VOLTMTR,E1326A,A.05.01,ROM
        -> SWITCH,SWITCHBOX,A.07.00,ROM
        -> COUNTER,E1332A,A.04.02,ROM
        -> COUNTER,E1333A,A.04.02,ROM
        -> DIG_I/O,E1330A,A.04.04,ROM
        -> D/A,E1328A,A.04.02,ROM

Flash ROM set to 0
    Flash ROM Available: +0
    Flash ROM Size: +1048576
```

```
    Flash ROM Created for Drivers: +0

Flash ROM set to maximum
    Flash ROM Available: +1048576
    Flash ROM Size: +1048576
    Flash ROM Created for Drivers: +64
```

Test F-5: Interrupt/Status Information

Description

This test uses the following commands to return information on command module interrupt lines and on register status. See Chapter 4 - Status and Interrupts in the Keysight E1406A Command Module User's Manual for interrupt and status information.

Interrupt Information

```
DIAG:INT:SETn? State of interrupt line n
```

Status Information

```
STAT:OPER:COND? State of Condition register
STAT:OPER:ENAB? Standard Operation Enable register mask value
STAT:OPER:EVEN? Value of bit set in Event register
STAT:QUES:ENAB? Questionable Status Register enable mask value
```

Set Up Equipment

- Turn Mainframe Power OFF
- Connect computer to Command Module (see Figure 2-12)
- Turn Mainframe Power ON

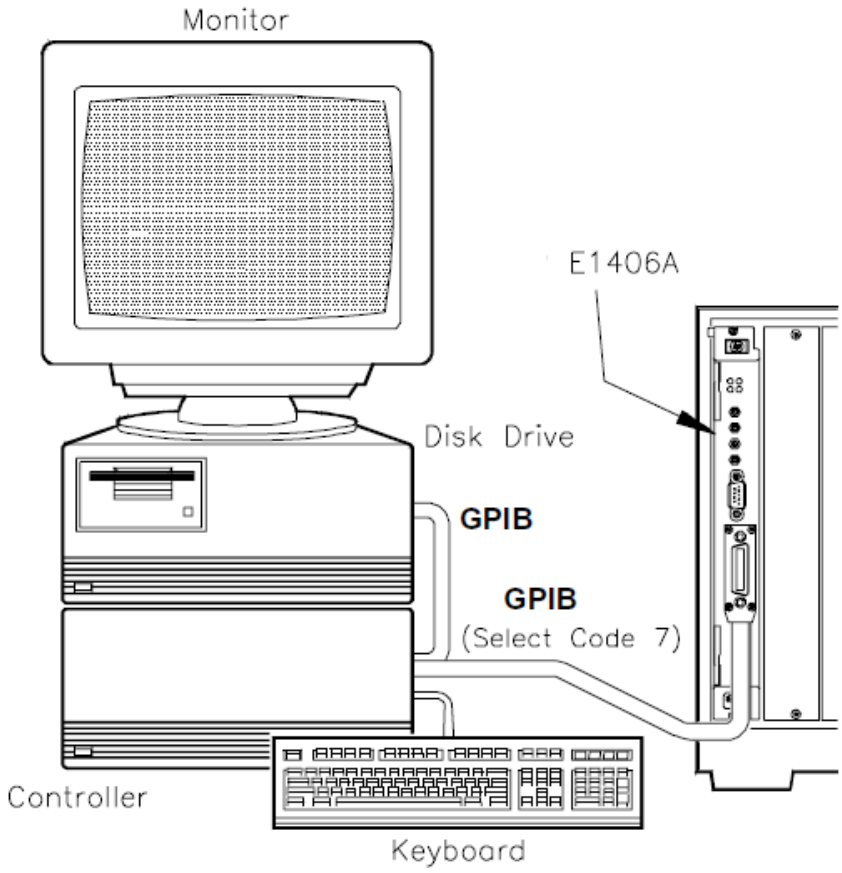

Figure 2-12 Test F-5: Interrupt/Status Info Connection

Example Program

This program uses the commands listed in Description to return information on command module interrupt lines and register status.

```
1!Test F-5: Interrupt/Status Information
2!
3! ———————————— Get Interrupt Information ——————————-
10ASSIGN @Addr to 70900!Assign @Addr to cmd mod
20DIM Int_set$(7)[3]
30FOR I=1 TO 7!Loop to find states of interrupt lines 1-7
40OUTPUT @Addr;"DIAG:INT:SET"&VAL$(I)&"?"!Query state of
interrupt line n (n = 1-7)
50ENTER @Addr;Int_set$(I)
60NEXT I
61! ——————————— Get Register Status Information ———-———-
```

```
70OUTPUT @Addr;"STAT:OPER:COND?"!Query state of Condition
Register
80ENTER @Addr;Oper_cond$
90OUTPUT @Addr;"STAT:OPER:ENAB?"!Query Standard Operation
Enable register mask value
100ENTER @Addr;Oper_enab$
110OUTPUT @Addr;"STAT:OPER:EVEN?"!Query value of bit set in
Event register
120ENTER @Addr;Oper_even$
130OUTPUT @Addr;"STAT:QUES:ENAB?"!Query Questionable Status
Register enable mask value
140ENTER @Addr;Ques_enab$
141!————————————- Display Results ————————————
150PRINT “Test F-5: Interrupt/Status Information”
160PRINT
170PRINT “Interrupt Information”
180PRINT
190PRINT “  - State of interrupt line 1:”;Int_set$(1)
200PRINT “  - State of interrupt line 2:”;Int_set$(2)
210PRINT “  - State of interrupt line 3:”;Int_set$(3)
220PRINT “  - State of interrupt line 4:”;Int_set$(4)
230PRINT “  - State of interrupt line 5:”;Int_set$(5)
240PRINT “  - State of interrupt line 6:”;Int_set$(6)
250PRINT “  - State of interrupt line 7:”;Int_set$(7)
260PRINT
270PRINT “Status Information”
280PRINT
290PRINT “  - State of Condition register:”;Oper_cond$
300PRINT “  - Standard Operation Enable register mask value:
”;Oper_enab$
310PRINT “  - Value of bit set in Event register:”;Oper_even$
320PRINT “  - Questionable Status Register enable mask value:
”;Ques_enab$
330END
```

Typical Results

Typical results follow for a command module with all interrupt lines OFF and no status register values set.

```
Test F-5: Interrupt/Status Information
Interrupt Information
```

```
- State of interrupt line 1:          OFF
- State of interrupt line 2:          OFF
- State of interrupt line 3:          OFF
- State of interrupt line 4:          OFF
- State of interrupt line 5:          OFF
- State of interrupt line 6:          OFF
- State of interrupt line 7:          OFF Status Information
- State of Condition register:        +0
- Standard Operation Enable register mask value:  +0
- Value of bit set in Event register:              +0
- Questionable Status Register enable mask value: +0
```

Test F-6: Triggering Information

Description

This test uses the following commands to return information on the ECLTrg and TTLTrg trigger lines, and on the Trig Out port.

ECLTrg Trigger Lines (n = 0 or 1)

OUTP:ECLT[n]:LEV?	ECLTrg Line n Logic Level
OUTP:ECLT[n]:SOUR?	ECLTrg Line n Source
OUTP:ECLT[n]:STAT?	ECLTrg Line n State (ON or OFF)

TTLTrg Trigger Lines (n = 0 to 7)

OUTP:TTLT[n]:LEV?	TTLTrg Line n Logic Level
OUTP:TTLT[n]:SOUR?	TTLTrg Line n Source
OUTP:TTLT[n]:STAT?	TTLTrg Line n State (ON or OFF)

Trig Out Port

OUTP:EXT:LEV?	Trig Out Port Logic Level
OUTP:EXT:SOUR?	Trig Out Port Source
OUTP:EXT:STAT?	Trig Out Port State

Set Up Equipment

- Turn Mainframe Power OFF
- Connect computer to Command Module (see Figure 2-13)
- Turn Mainframe Power ON

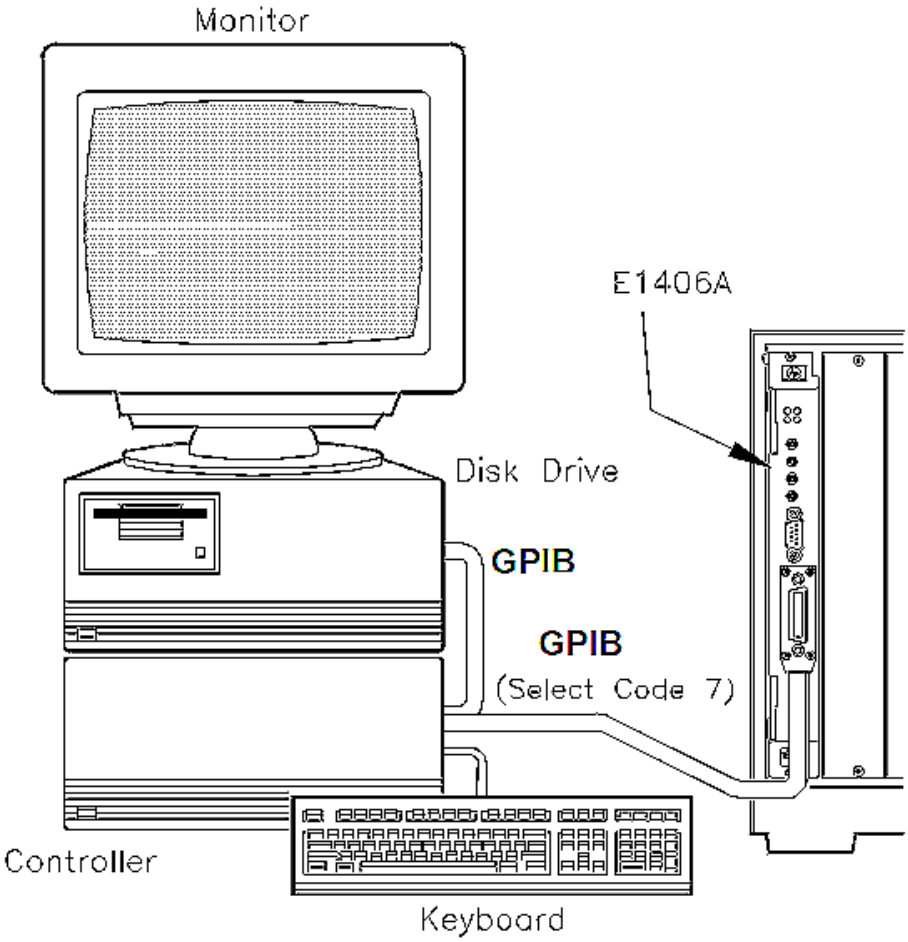

Figure 2-13 Test F-6: Triggering Info Connections

Example Program

This program uses the commands listed in the Description section to return information on the ECLTrg and TTLTrg trigger lines, and on the Command Module Trig Out port.

```
1! Test F-6: Triggering Information
2!
10Assign @Addr to 70900!Assign @Addr to Cmd Mod
20DIM Elev$(2)[5],Esour$(2)[5],Estat$(2)[5]
30DIM Tlev$(7)[5],Tsour$(7)[5],Tstat$(7)[5]
31! ————————————- Get TTLTrg Line Information ————————
40FOR I=0 TO 1
```

```
50OUTPUT @Addr;"OUTP:ECLT"&VAL$(I)&":LEV?"!Query ECLTrg Line 0
- 1 logic level
60ENTER @Addr;Elev$(I)
70OUTPUT @Addr;"OUTP:ECLT"&VAL$(I)&":SOUR?"!Query ECLTrg Line 0
- 1 source
80ENTER @Addr;Esour$(I)
90OUTPUT @Addr;"OUTP:ECLT"&VAL$(I)&":STAT?"!Query ECLTrg Line 0
- 1 state
100ENTER @Addr;Estat$(I)
110NEXT I
111! ———————————- Get ECLTrg Line Information ——————————
120FOR I=0 TO 7
130OUTPUT @Addr;"OUTP:TTLT"&VAL$(I)&":LEV?"!Query TTLTrg lines
0 - 7 logic level
140ENTER @Addr;Tlev$(I)
150OUTPUT @Addr;"OUTP:TTLT"&VAL$(I)&":SOUR?"!Query TTLTrg lines
0 - 7 source
160ENTER @Addr;Tsour$(I)
170OUTPUT @Addr;"OUTP:TTLT"&VAL$(I)&":STAT?"!Query TTLTrg lines
0 - 7 state
180ENTER @Addr;Tstat$(I)
190NEXT I
191! ———————————- Get Trig Out Port Information ——————————
200OUTPUT @Addr;"OUTP:EXT:LEV?"!Query Trig Out port logic level
210ENTER @Addr;Slev$
220OUTPUT @Addr;"OUTP:EXT:SOUR?"!Query Trig Out port source
230ENTER @Addr;Ssour$
240OUTPUT @Addr;"OUTP:EXT:STAT?"!Query Trig Out port state
250ENTER @Addr;Sstat$
251! ——————————————————- Display Information ————-————
260PRINT “Test F-6: Triggering Information”
270PRINT
280PRINT “LevelSource  State”
290 PRINT
300 PRINT “  - ECLTrg Trigger Line 0: ”;Elev$(0),Esour$(0),Estat$(0)
310 PRINT “  - ECLTrg Trigger Line 1: ”;Elev$(1),Esour$(1),Estat$(1)
320 PRINT
330 FOR I=0 TO 7
340 PRINT “  - TTLTrg Trigger Line”;I;": “;Tlev$(I),Tsour$(I),Tstat$(I)
350 NEXT I
360 PRINT
```

```
370 PRINT "  - Trig Out Port:";Slev$,Ssour$,Sstat$
380 END
```

Typical Results

Typical results follow for a Command Module with all TTLTrg and ECLtrg Lines and the Trig Out port set at level 0, no source, and state 0.

```
Test F-6: Triggering Information
                        Level      Source     State
- ECLTrg Trigger Line 0:   0        NONE        0
- ECLTrg Trigger Line 1:   0        NONE        0

- TTLTrg Trigger Line 0:   0        NONE        0
- TTLTrg Trigger Line 1:   0        NONE        0
- TTLTrg Trigger Line 2:   0        NONE        0
- TTLTrg Trigger Line 3:   0        NONE        0
- TTLTrg Trigger Line 4:   0        NONE        0
- TTLTrg Trigger Line 5:   0        NONE        0
- TTLTrg Trigger Line 6:   0        NONE        0
- TTLTrg Trigger Line 7:   0        NONE        0

- Trig Out Port:           0        NONE        0
```

Test F-7: Serial Port Information

This test uses the following commands to return information on the command module serial (RS-232) port.

DIAG:COMM:SER:OWN? Serial port ownership
SYST:COMM:SER:BAUD? Baud rate
SYST:COMM:SER:CONT:DTR? DTR mode line
SYST:COMM:SER:CONT:RTS? RTS mode line

SYST:COMM:SER:BITS? Bits setting
SYST:COMM:SER:SBIT? Number of stop bits
SYST:COMM:SER:PACE:THR:STAR? STARt threshold level
SYST:COMM:SER:PACE:THR:STOP? STOP threshold level

SYST:COMM:SER:PAR:CHEC? Receive parity check
SYST:COMM:SER:PAR:TYP? Parity type checking
SYST:COMM:SER:TRAN:AUTO? Transmit/receive protocol
SYST:COMM:SER:PACE:PROT? Receive pacing protocol
SYST:COMM:SER:TRAN:PACE:PROT? Transmit pacing protocol

Set Up Equipment

- Turn Mainframe Power OFF
- Connect computer to Command Module (see Figure 2-14)
- Turn Mainframe Power ON

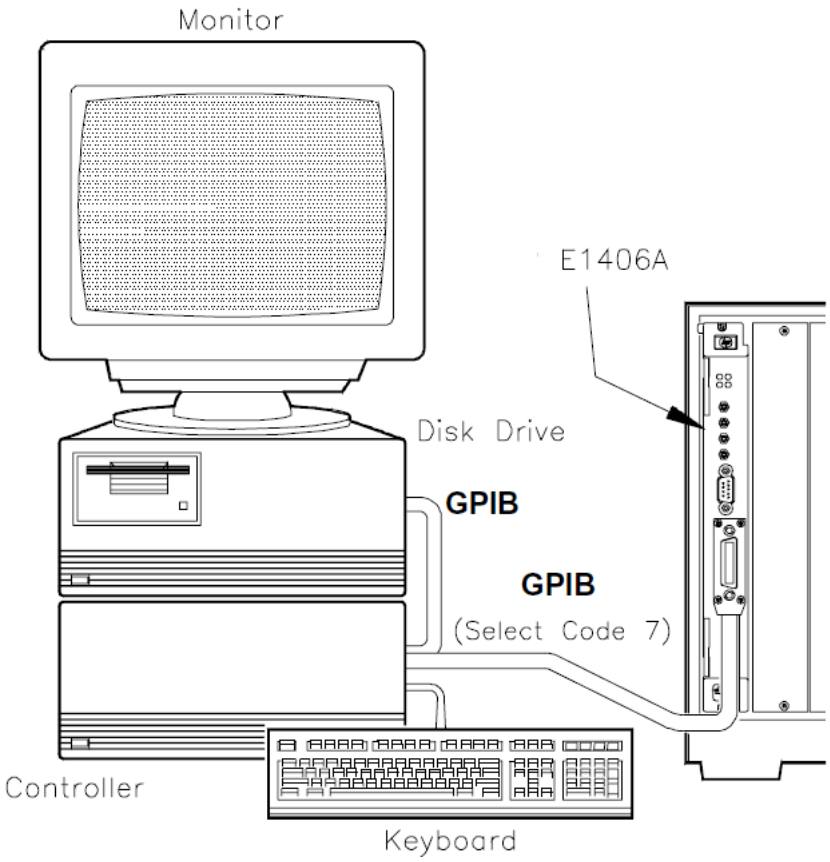

Figure 2-14 Test F-7: Serial Port Info Connections

Example Program

This program uses the commands listed in the Description section to return information on the current Command Module Serial (RS-232) Port settings.

```
1!Test F-7: Serial Port Information
2!
10Assign @Addr to 70900!Assign @Addr to cmd module
20OUTPUT @Addr;"DIAG:COMM:SER:OWN?"!Query serial port ownership
30ENTER @Addr;Own$
40OUTPUT @Addr;"SYST:COMM:SER:BAUD?"! Query baud rate
50ENTER @Addr;Baud
60OUTPUT @Addr;"SYST:COMM:SER:CONT:DTR?"!Query DTR mode line
70ENTER @Addr;Dtr$
80OUTPUT @Addr;"SYST:COMM:SER:CONT:RTS?"!Query RTS mode line
```

```
90ENTER @Addr;Rts$
100OUTPUT @Addr;"SYST:COMM:SER:BITS?"!Query bits setting
110ENTER @Addr;Bits
120OUTPUT @Addr;"SYST:COMM:SER:SBIT?"!Query number of stop bits
130ENTER @Addr;Sbits
140OUTPUT @Addr;"SYST:COMM:SER:PACE:THR:STAR?" !Query STARt
threshold level
150ENTER @Addr;Star
160OUTPUT @Addr;"SYST:COMM:SER:PACE:THR:STOP?" !Query STOP
threshold level
170ENTER @Addr;Stop
180OUTPUT @Addr;"SYST:COMM:SER:PAR:CHEC?"!Query receive parity
check state
190ENTER @Addr;Chec
200OUTPUT @Addr;"SYST:COMM:SER:PAR?"!Query current parity type
checking
210ENTER @Addr;Typ$
220OUTPUT @Addr;"SYST:COMM:SER:TRAN:AUTO?"!Query
transmit/receive protocol
230ENTER @Addr;Auto$
240OUTPUT @Addr;"SYST:COMM:SER:PACE:PROT?"!Query receive pacing
protocol
250ENTER @Addr;Rpace$
260OUTPUT @Addr;"SYST:COMM:SER:TRAN:PACE:PROT?" !Query transmit
pacing protocol
270ENTER @Addr;Space$
280CLEAR SCREEN
290PRINT “Test F-7: Serial Port Information”
300PRINT
310PRINT “  - Serial port ownership:”;Own$
320PRINT “  - Transmit/receive baud rate:”;Baud
330PRINT “  - Current mode of DTR line:”;Dtr$
340 PRINT “ - Current mode of RTS line: ”;Rts$
350 PRINT
360 PRINT “ - Current bits setting: ”;Bits
370 PRINT “ - Number of stop bits set: ”;Sbits
380 PRINT “ - STARt Threshold Level: ”;Star
390 PRINT “ - STOP Threshold Level: ”;Stop
400 PRINT
410 PRINT “ - Receive parity check state: ”;Chec
420 PRINT “ - Current parity type checking: ”;Typ$
```

```
430 PRINT " - Transmit/receive pacing linkage: ";Auto$
440 PRINT " - Receive pacing protocol state: ";Rpace$
450 PRINT " - Transmit pacing protocol state: ";Space$
460 END
```

Typical Results

Typical results follow for a command module RS-232 serial port.

```
Test F-7: Serial Port Information
- Serial port ownership:           SYST
- Transmit/receive baud rate:      9600
- Current mode of DTR line:        ON
- Current mode of RTS line:        ON
- Current bits setting:            8
- Number of stop bits set:         1
- STARt threshold level:           10
- STOP threshold level:            65
- Receive parity check state:      0
- Current parity type checking:    NONE
- Transmit/receive pacing linkage: 1
- Receive pacing protocol state:   XON
- Transmit pacing protocol state:  XON
```

3 Replaceable Parts

Introduction

This chapter contains information to order replaceable parts or exchange modules for the Keysight E 1406A Command Module. To order a part or exchange assembly listed in this chapter, specify the Keysight Technologies part number and the quantity required. Send the order to your nearest Keysight Technologies Sales and Support Office.

Exchange Modules

Table 3-1 lists modules that may be replaced on an exchange basis (Exchange Modules). Exchange modules are available only on a trade-in basis. Defective modules must be returned for credit. Order modules for spare parts stock by the new module part number.

Table 3-1 Keysight E1406A Command Module - Exchange Modules

Model	Description	Exchange Part Number	New Part Number
E1406A	Replacement Module (Standard Memory)	E1406-69201	E1406-66201
	Replacement Module (Expanded Memory)	E1406-69202	E1406-66202

Replaceable Parts Lists

Table 3-2 lists replaceable parts for the Keysight E 1406A Command Modules. See “Component Locators” (Figures 3-1 and 3-2) for locations of parts in Table 3-2. Table 3-3 shows reference designators for parts in Table 3-2, and Table 3-4 shows the manufacturer code list for the parts.

NOTE If a com m and module defect can be traced to a fuse or replaceable mechanical part, replace the fuse and/or part and retest the module. If the defect cannot be traced to a fuse or replaceable mechanical part, replace the entire module. Individual printed circuit assemblies (PCA s) cannot be returned for replacement or exchange.

Table 3-2 E1406A Command Module Replaceable Parts

Reference* Designator	Keysight Part Number	Qty	Description	Mfr** Code	Mfr Part Number
			REPLACEMENT MODULES		
	E1406-66201		REPLACEMENT CONTROLLER MODULE (STANDARD)		
	E1406-66202		REPLACEMENT CONTROLLER MODULE (EXP. MEMORY)		
			Keysight E1406A HARDWARE PARTS (Fig. 3-1)		
BT1	E1300-86401	1	BATTERY PACK, 3.6V W/2	28480	E1300-86401
HDW1-HDW2	2190-0124	4	WASHER-LOCK INTL T NO. 10 .195-IN-ID	98291	3002-26
HDW3-HDW4	2950-0078	4	NUT-HEX-DBL-CHAM 10-32-THD .067-IN-THK	74163	500220
HDW5-HDW6	2190-0004	2	WASHER-LOCK INTL T NO. 4 .115-IN-ID	78189	SF 1904-00
HDW7-HDW8	2190-0577	2	WASHER-LOCK NO. 10 .194-IN-ID .294-IN-OD	28480	2190-0577
HDW9-HDW10	5180-6650	2	STANDOFF, HEX	28480	5180-6650
HDW11-HDW12	2190-0124		WASHER-LOCK INTL T NO. 10 .195-IN-ID	98291	3002-26
HDW13-HDW14	2950-0078		NUT-HEX-DBL-CHAM 10-32-THD .067-IN-THK	74163	500220
MP1	E1400-45102†	1	HANDLE - BOTTOM METAL INJECTION	28480	E1400-84105
MP2	E1400-45101†	1	HANDLE - TOP METAL INJECTION	28480	E1400-84106
MP4-MP5	0380-1858	2	STANDOFF-HEX .312-IN-LG 4-40-THD	05791	ST9532-36
MP6-MP9	0380-1963	4	STANDOFF-HEX 15-MM-LG M3.0 X 0.5-THD	05791	AL5172-15-21
MP12	8160-0686	1	RFI STRIP-FINGERS BE-CU TIN-PLATED	30817	00786-185
PNL1	E1406-00202†	1	FRONT PANEL-COMMAND MODULE	28480	E1406-00202
SCR1-SCR2	0515-1032	2	SCREW-MACHINE M3 X 0.5 14MM-LG FLAT-HEAD	28480	0515-1032
SCR3-SCR4	0515-1644	4	SCREW-MACHINE M3 X 0.5 12MM-LG FLAT-HEAD	28480	0515-1644
SCR5-SCR8	0515-1135	4	SCREW-MACHINE M3 X 0.5 25MM-LG FLAT-HEAD	28480	0515-1135
SCR9-SCR10	0515-1644		SCREW-MACHINE M3 X 0.5 12MM-LG FLAT-HEAD	28480	0515-1644
SCR15-SCR16	0515-0368†	2	SHOULDER SCREW ASS'Y	28480	0515-0368
SHD1	E1406-00601	1	SHIELD-TOP COMMAND MODULE	28480	E1406-00601
SHD2	E1406-00602	1	SHIELD-BOTTOM	28480	E1406-00602
			Keysight E1406A A1 REPLACEABLE PARTS (Fig. 3-2)		
F1-F3	2110-0712	4	FUSE-SUBMINATURE 4A 125V NTD AX	75915	R251004T1
F4	2110-0699	1	FUSE-SUBMINATURE 5A 125V NTD AX UL CSA FUSE-SUBMINATURE	75915	R251005T1
F5	2110-0712		4A 125V NTD AX	75915	R251004T1
J1-J2	1251-7798	2	CONNECTOR-POST TYPE 2.54-PIN-SPCG 64 CONTACT	81312	64S-6033-04-31-2
J5	1251-4682	1	CONNECTOR-POST TYPE .100-PIN-SPCG 3 CONTACT	26742	1102-1-103-02
J6	1252-1994	1	CONNECTOR-RECTANGLE D-SUBMIN 9-CKT 9-CONTACT	00779	748879-1
J7-J10	1250-2266	4	CONNECTOR-RF SMB PLUG 50-OHM	74970	131-3701-501
J11	1252-2161	1	CONNECTOR-RECT. MICRO-RIBBON 24 CONTACT CONNECTOR-POST	00779	554923-2
J12	1252-3694	1	TYPE .100-PIN-SPCG 2-CONTACT	27264	705-45-0071
P1	1252-1596	1	CONNECTOR-POST TYPE 2.54-PIN-SPCG 96-CONTACT	06776	DIN-96CPC-SRI-TR
P2	1252-4743	1	CONNECTOR-POST TYPE 2.54-PIN-SPCG 64-CONTACT	00779	650945-5
S2	3101-3187	1	SWITCH - DIP ROTARY 10 POS. BCD SWITCH - DIP SLIDE SPDT 0.05A	97525	350012G5
S3	3101-2673	1	30VDC	81073	78J01S
SP1	3101-2063	1	SWITCH-DIP ROCKER 4-1A 0.05A 30VDC SWITCH-DIP ROCKER 8-1A	81073	76YY23444S
SP2-SP5	3101-3066	4	0.15A 30VDC	81073	76YY22968S

* See Table 3-3 for Reference Designator definitions
** See Table 3-4 for Code List of Manufacturers
† These parts are not compatible with older versions of the E1406A that have plastic handles. To replace one of these parts on an older E1406A, you must order all four of the parts marked with a †.

Table 3-3 Keysight E1406A Command Module Reference Designators

Keysight E1406A Command Module Reference Designators		
A ..... assembly	J .....electrical connector (jack)	S ..... switch (rotary)
BT ..... battery pack	MP ..... misc. mech part	SCR ..... screw
F ..... fuse	P ..... electrical conn (plug)	SHD ..... shield
HDW.....misc hardware	PNL ..... panel	SP ..... switch (push-button)

Table 3-4 Keysight E1406A Command Module Code List of Manufacturers

Mfr Code	Manufacturer Name	Manufacturer Address	Zip Code
00779	AMP INC	HARRISBURG PA US	17111
05791	LYN-TRON INC	BURBANK CA US	91505
06776	ROBINSON NUGENT INC	NEW ALBANY IN US	47150
18873	DUPONT E I DE NEMOURS & CO	WILMINGTON DE US	19801
26742	METHODE ELECTRONICS INC	CHICAGO IL US	60656
27264	MOLEX INC	LISLE IL US	60532
28480	Keysight TECHNOLOGIES INC - CORPORATE	PALO ALTO CA US	94304
30817	INSTRUMENT SPECIALTIES CO INC	DEL WATER GAP PA US	18327
59730	THOMAS & BETTS CORP	RARITAN NJ US	08869
74163	PHELPS DODGE CORP	NEW YORK NY US	10022
74970	EF JOHNSON CO	WASECA MN US DES	56093
75915	LITTELFUSE INC	PLAINES IL US	60016
76381	3M CO	ST PAUL MN US	55144
78189	ILLINOIS TOOL WORK INC SHAKEPROOF	ELGIN IL US	60126
81073	GRAYHILL INC	LA GRANGE IL US	60525
81312	WINCHESTER ELECTRONICS	OAKVILLE CT US	06779
83486	ELCO INDUSTRIES INC	ROCKFORD IL US	61125
97525	EECO INC	SANTA ANA CA US	92702
98291	ITT SEALECTRO CORP	TRUMBULL CT US	06611

Component Locators

Figures 3-1 and 3-2 show locations of selected replaceable parts for the Keysight E 1406A Command Module.

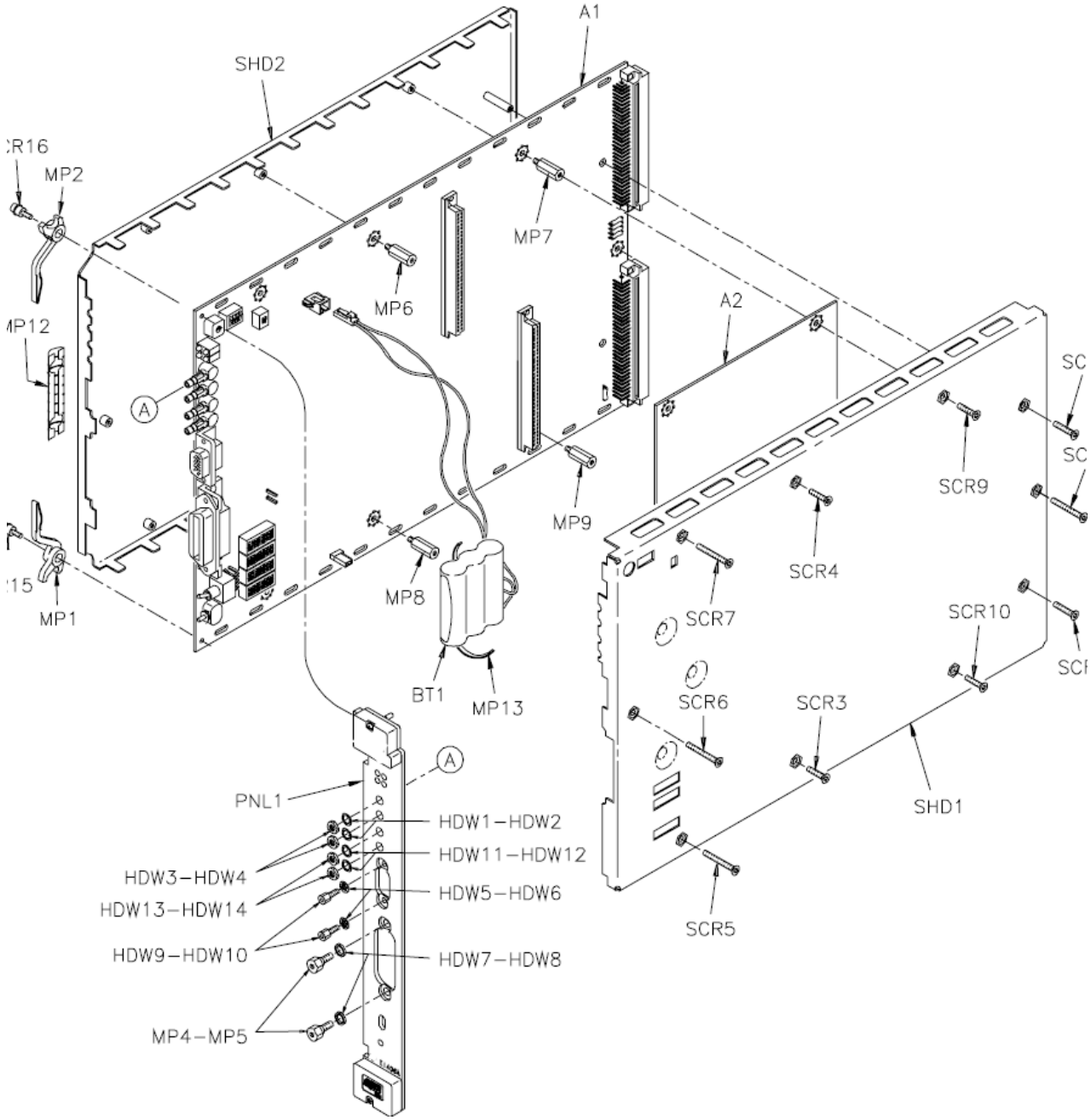

Figure 3-1 Keysight E1406A Replaceable Parts

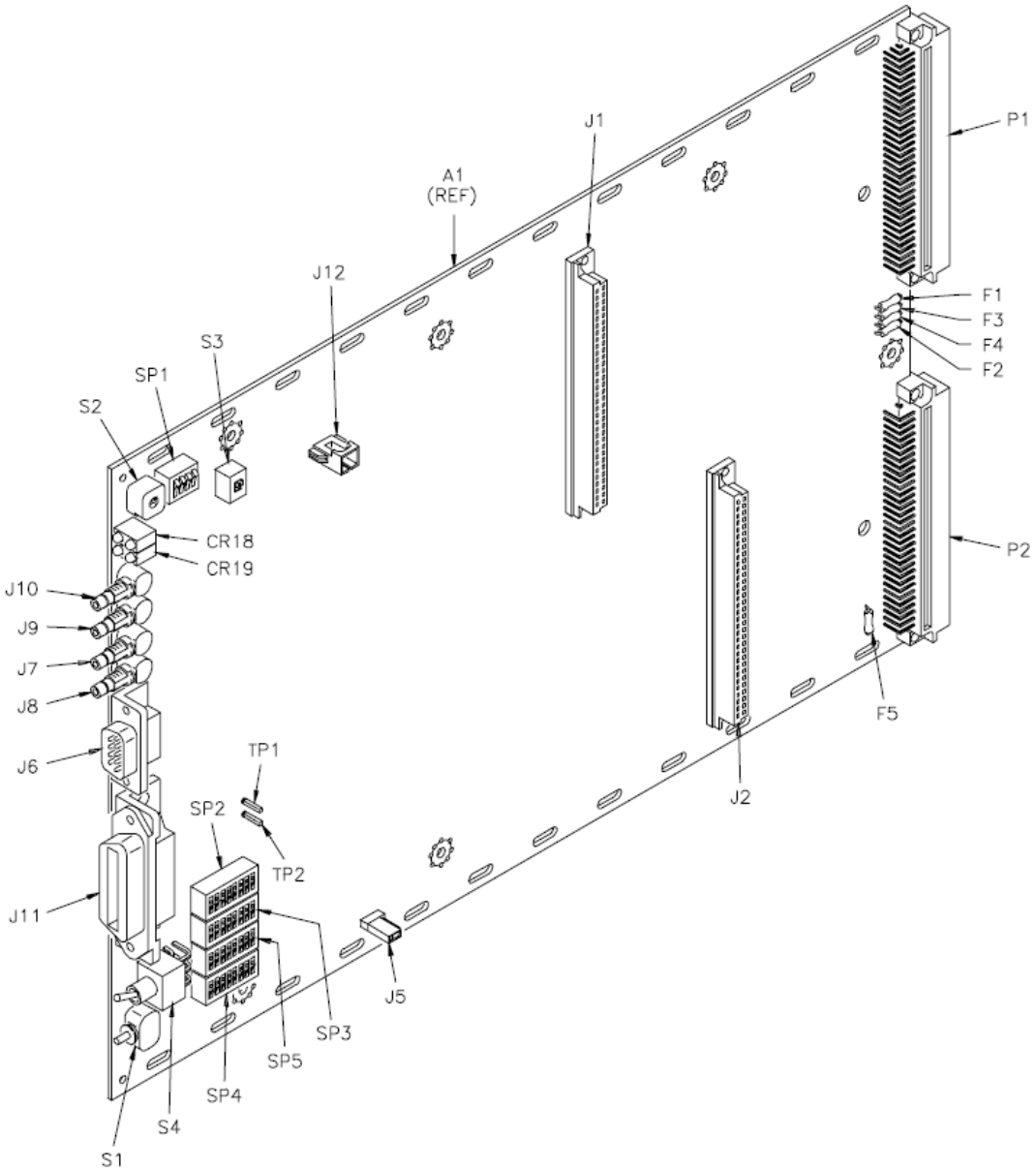

Figure 3-2 Keysight E1406A A1 PCA Replaceable Parts

4 Service

Introduction

This chapter contains Keysight E1406A Command Module service information:

- recommended repair strategy
- troubleshooting guidelines
- assembly/disassembly instructions
- repair/maintenance guidelines
- returning module to Keysight Technologies

WARNING **Do not perform any of the service procedures shown unless you are a qualified, service-trained person, and have read the WARNINGS and CAUTIONS in Chapter 1.**

Equipment required for Keysight E1406A Command Module troubleshooting and repair is listed in Table 1-4, Keysight E1406A Command Module Recommended Test Equipment. Service notes and service literature for the command modules may be available through Keysight Technologies.

Repair Strategy

The recommended repair strategy for the Keysight E1406A Command Module is module replacement.

- Before replacing an Keysight E1406A Command Module, check fuses F1 through F5 on the A1 Printed Circuit Assembly (PCA) and/or the replaceable mechanical parts listed in Table 3-2.
- If the fault can be traced to a fuse or replaceable mechanical part listed in Table 3-2, repair and retest the module. If the fault cannot be traced to a replaceable mechanical part listed in Table 3-2, replace the module.
- As required, re-download the IBASIC and/or the Device Drivers. See the appropriate installation note for downloading device drivers or IBASIC.

NOTE If you need to return a command module to Keysight Technologies, see “Returning Modules to Keysight” at the end of this chapter.

Troubleshooting

This section shows suggested steps to troubleshoot Keysight E1406A Command Module faults to a fuse on the A1 PCA or to a replaceable mechanical part listed in Table 3-2. See Figure 4-1 for suggested steps.

1 Prepare the Mainframe

To begin troubleshooting, turn the mainframe power switch OFF and remove all power sources to any installed modules. Connect an RS-232 terminal to the front panel RS-232 port. See the C-Size VXIbus Systems Configuration Guide for information on connecting and configuring an RS-232 terminal.

2 Check LEDs and Terminal Display

Press the mainframe power switch ON and observe the four LEDs on the command module front panel and the power-on display on the RS-232 terminal. Then, wait at least 5 seconds before proceeding to the next step (Step 3, Step 4, or Step 5).

NOTE **The RS-232 terminal is a very valuable tool for use in power-on and diagnostic troubleshooting, since it provides a “front panel” for the command modules. See Chapter 3 - Using the Display Terminal Interface in the Keysight E1406A Command Module User’s Manual for details on RS-232 terminal operation and features**

For NORMAL power-on, the RS-232 terminal display shows:

- A kernel test that tests RAM, ROM, and the microprocessor, monitors the ACFAIL* line and then calls the Resource Manager to check the system.
- Resource Manager configuration/errors for the power-on sequence. See “Test S-2: RS-232 Power-On Self-Test” in Chapter 2 - Verification Tests for a typical power-on sequence.

For NORMAL power-on, the command module LED sequence is:

- Failed and SYSFAIL LEDs turn ON for 5 sec, then turn OFF
- Next, the Access light blinks ON at least once and turns OFF
- Then, the Ready LED turns ON and remains ON

Depending on the LED(s) that remain ON after 5 seconds, go to Step 3 - Ready LED ON, Step 4 - Failed and SYSFAIL LEDs ON, or Step 5 - Failed LED (ONLY) ON.

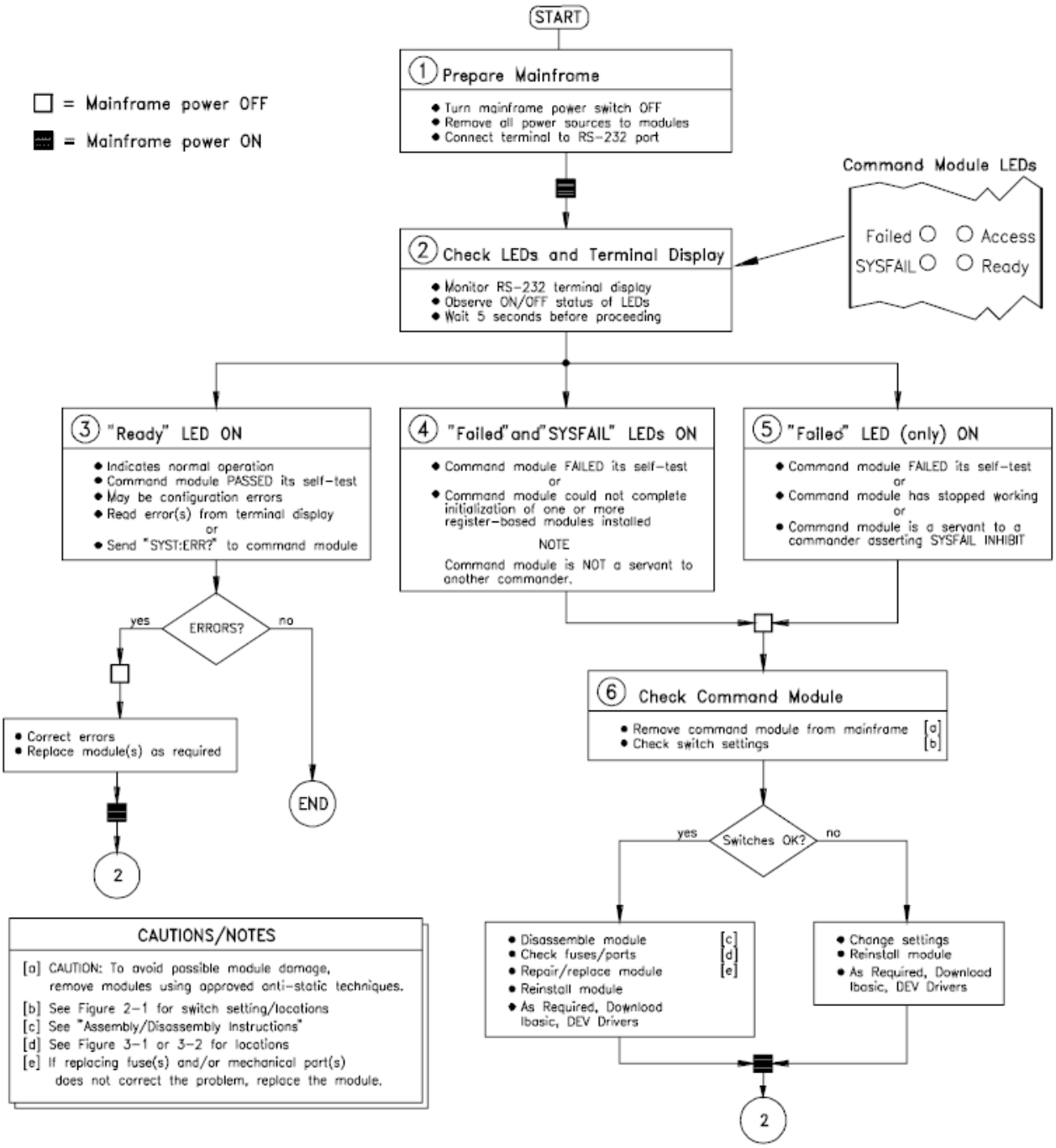

Figure 4-1 E1406A Command Module Troubleshooting

3 Ready LED (ONLY) ON

When the “Ready” LED is ON, normal operation is indicated. However, there may be configuration errors. If you have an RS-232 terminal connected, check the terminal display for configuration errors (see Chapter 5 - Error Messages for code explanations).

If you do not have an RS-232 terminal connected, you can check for configuration errors by sending the SYST:ERR? command to the command module. See “Test S-1: GPIB Power-On Self-Test” in Chapter 2 - Verification Tests for an example program.

- If +0, “No error” is returned, the system is normal and no further action is required.
- If one or more configuration error messages are returned, see Chapter 5 - Error Messages for possible causes/corrections. Correct configuration errors and exchange modules as required. Replace module(s) as required, turn mainframe power ON and rerun Step 2 - Check LEDs and Terminal Display.

4 Failed and SYSFAIL LEDs ON

The command module has failed the power-on self-test OR the module could not complete initialization of one or more installed modules. Turn mainframe power OFF and go to Step 6 - Check Command Module.

NOTE **The SYSFAIL LED should never be ON by itself. The SYSFAIL LED does NOT monitor the status of the backplane *SYSFAIL signal. If another device pulls *SYSFAIL low, it will not turn on the SYSFAIL LED. The command module will, however, perform a reboot/reset if *SYSFAIL goes low.**

5 Failed LED (ONLY) ON

If only the Failed LED is ON after 5 seconds, one of the following conditions has occurred. Turn mainframe power OFF and go to Step 6 - Check Command Module.

- The command module has FAILED the power-on self-test OR
- The command module has stopped working for some reason (e.g., no interrupt response from a register-based device even though the device driver is present in the command module) OR
- The command module is a servant to another commander that is asserting SYSFAIL INHIBIT in the command module’s Control Register.

6 Check Command Module

If the “Failed” and/or “SYSFAIL” LEDs remain ON after 5 seconds, turn mainframe power OFF and remove the command module from the mainframe.

- Check the command module switch settings for correct settings. See Figure 2-1 for switch locations. See Table 4-1 for factory settings.
- If the switch settings are incorrect, set correct settings. Then, reinstall the command module, turn mainframe power ON, and rerun Step 2 - Check LEDs and Terminal Display.
- If the switch settings are correct, disassemble the command module. See “Assembly/Disassembly Procedures” for details.
- Check fuses, and/or mechanical parts listed in Table 3-2. See Table 4-1 for suggested checks. See Figure 3-1 or 3-2 for component locations.

NOTE If the switch settings, fuses, and/or mechanical parts appear to be good, disconnect and then reconnect the battery connector. Reassemble and reinstall the command module and turn mainframe power ON. Then, rerun Step 2 - Check LEDs and Terminal Display. If the command module now passes self-test and other modules are installed, check and replace other modules as required.

NOTE If you replace the command module with a new module, download IBASIC and/or the device drivers as required.

Table 4- 1 Keysight E1406A Command Module Checks

Area	Reference Designator	Check:	Factory Setting:
Heat Damage	- - - - -	Discolored PC boards Damaged Insulation Evidence of arcing	
Switch Settings	S2	Bus Request Level System	3
	S3	Clock Setting System	Internal
	SP1	Controller/Slot 0	Enabled
	SP2	LADDR Setting	0
	SP3	Servant Area	255
	SP4	Primary GPIB Address (GPIB Controller OFF)	09
	SP5	Configuration Switch	0 (do not change)
Mechanical Parts	F1, F2, F3, F4, F5	Fuse Continuity	
	J1, J2, J5 - J12	Connector Contacts C	
	P1, P2	onnector Contacts	

- If the command module is repairable (see “Repair Strategy” for guidelines), repair and reinstall the module. Then, turn mainframe power ON and rerun Step 2 - Check LEDs and Terminal Display.
- If the module is not repairable, replace the entire module. Install a new command module, turn mainframe power ON and rerun Step 2 - Check LEDs and Terminal Display.

Assembly/ Disassembly Instructions

This section shows how to disassemble and reassemble an Keysight E1406A Command Module. See Figure 4-2 to prepare a command module for disassembly. To perform disassembly, you will need a T-10 Torx driver, a 1/4-inch hex nut driver, a 9/32-inch nut driver, and a 3/16-inch nut driver. See Steps 1 through 8 (following) to disassemble an Keysight E1406A Command Module.

CAUTION Do not handle or disassemble the command modules unless you are familiar with the precautions listed in the “Repair/Maintenance Guidelines” section of this chapter.

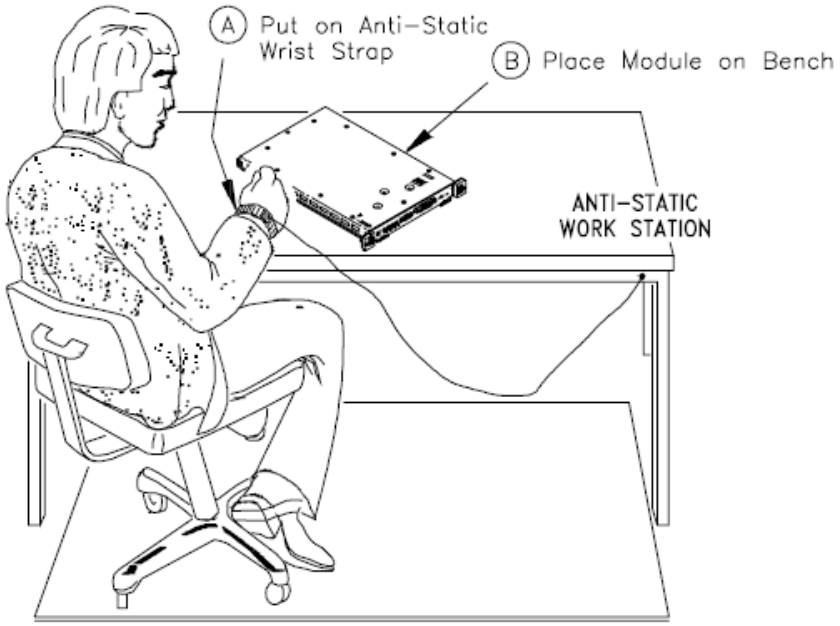

Figure 4-2 Preparing Command Module for Disassembly

Loosen Front Panel Hardware

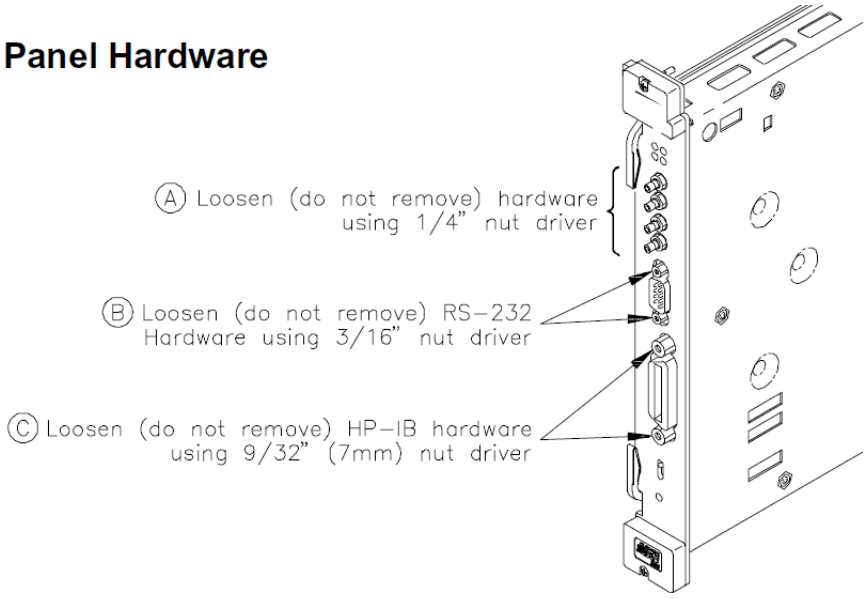

Remove Top Shield

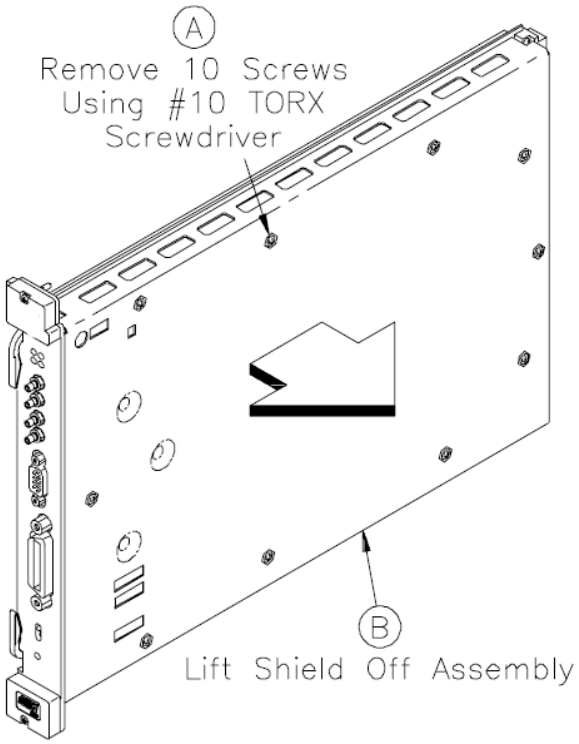

Remove the Battery Connector

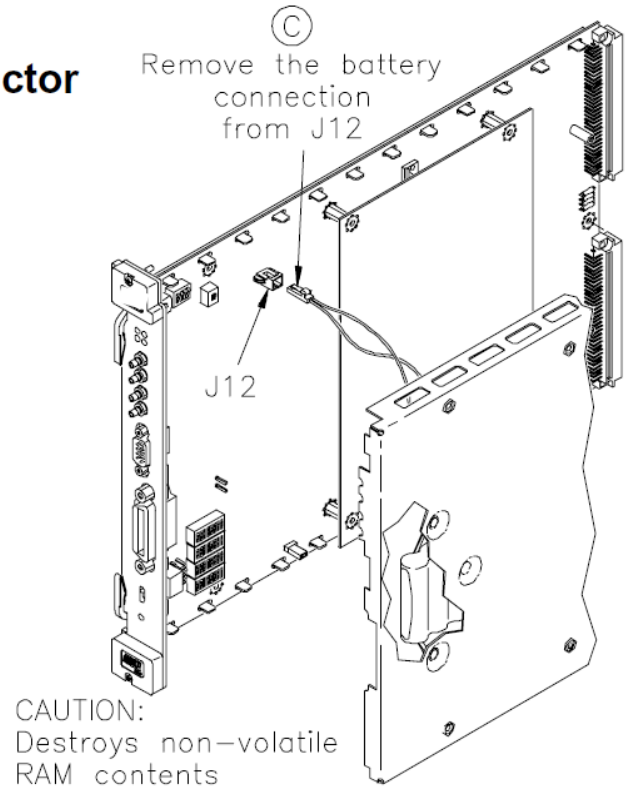

Remove A2 Memory Board

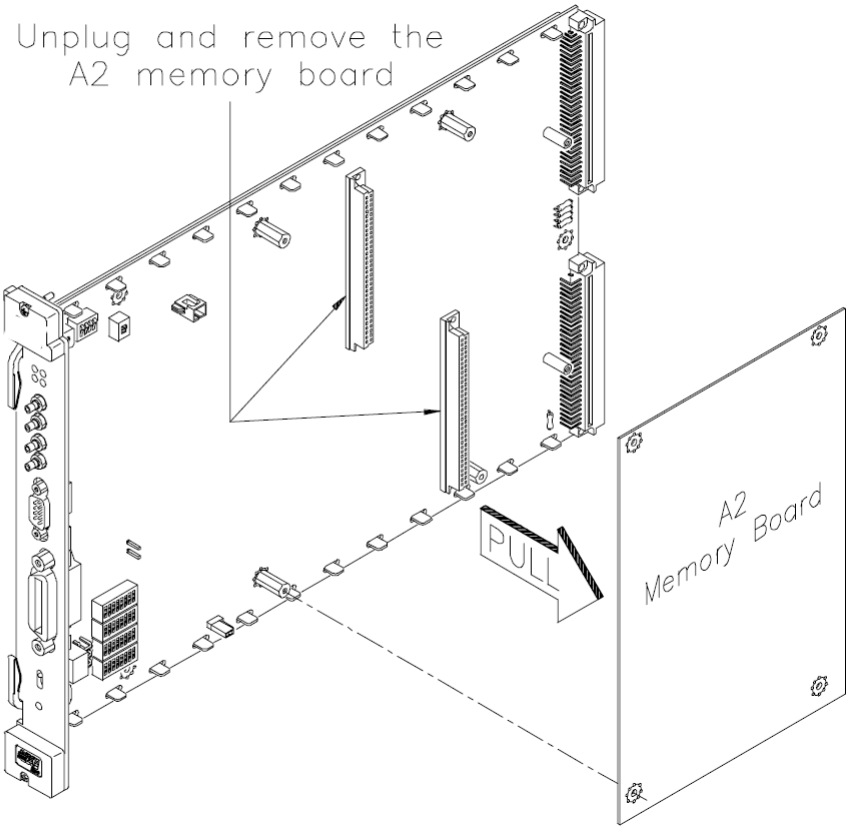

Troubleshoot A1 PCA/Mechanical Parts

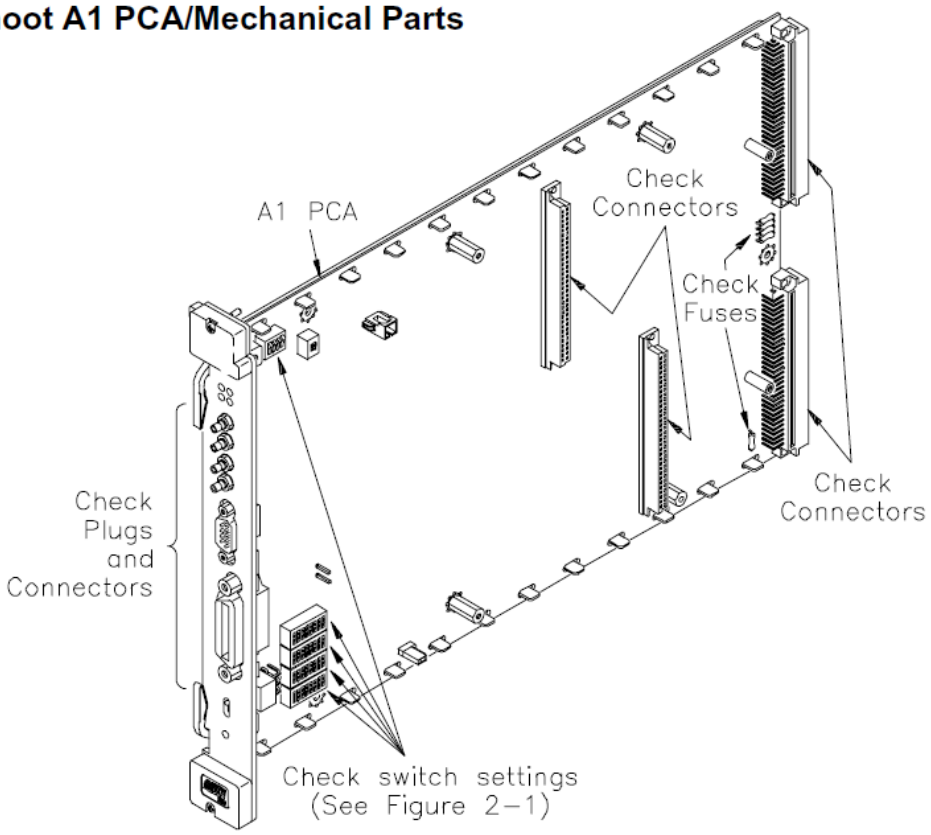

NOTE Be sure switches are COMPLETELY seated in the proper position. Switches may appear to be in the correct position but may not be fully seated. One way to ensure that switches are seated is to listen for a “click” as you depress the switch.

Replace A2 Memory Board

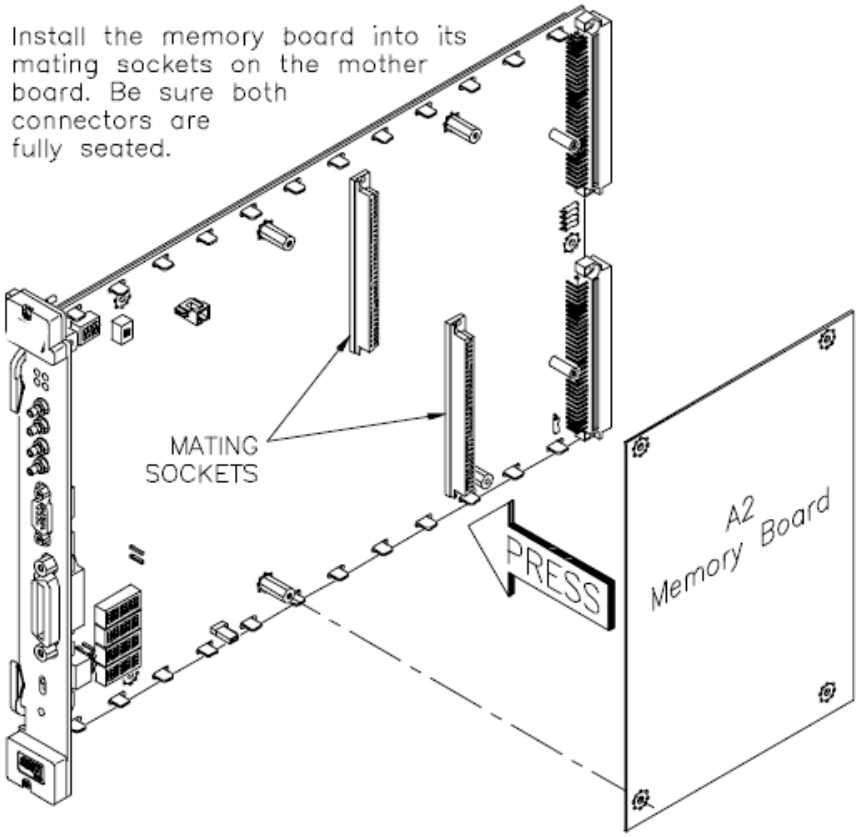

Reconnect the Battery

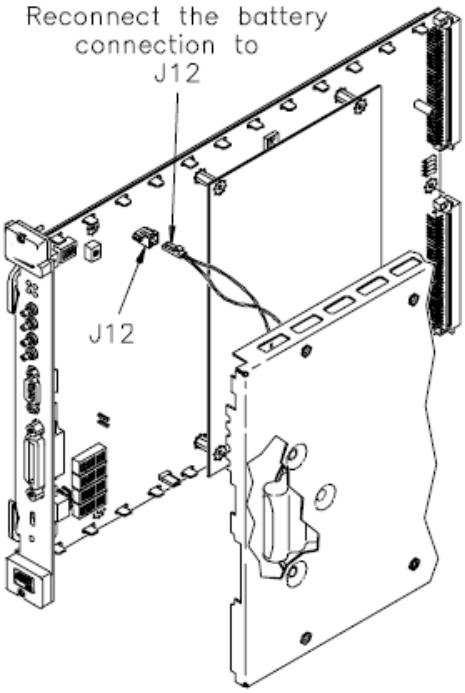

Replace Top Shield

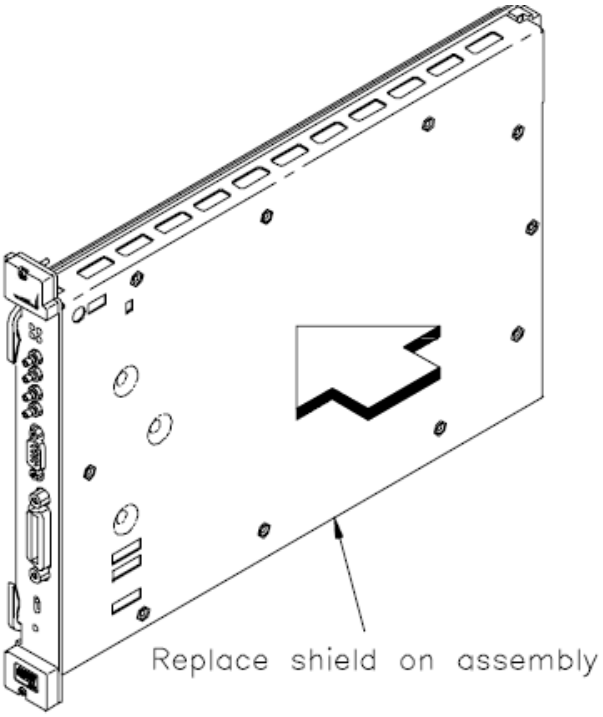

Replace Top Shield Screws

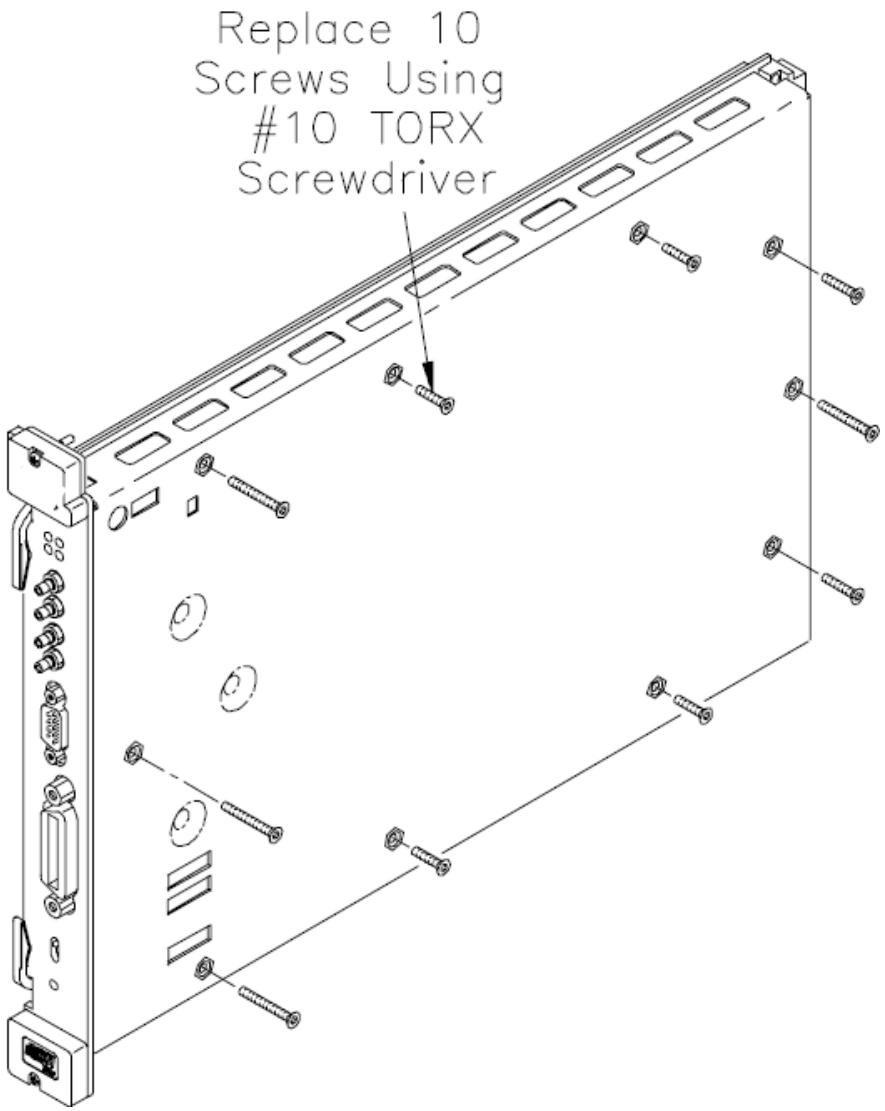

Tighten Front Panel Hardware

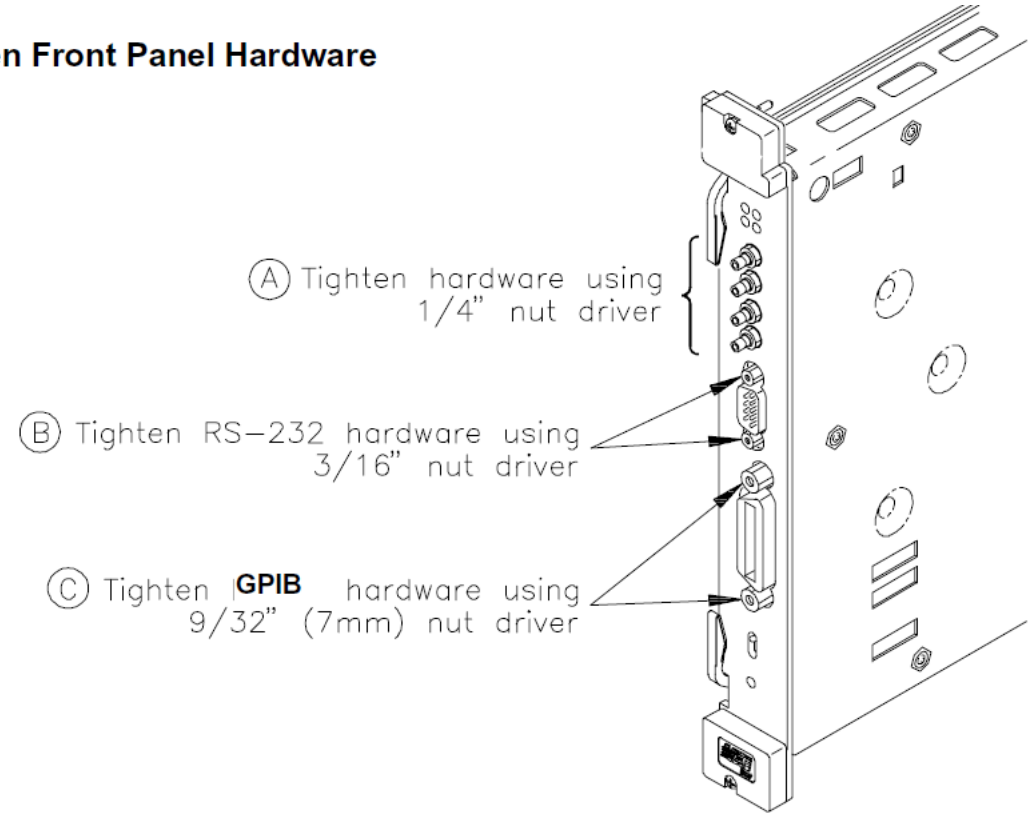

Repair/ Maintenance Guidelines

Guidelines to repair and maintain an Keysight E1406A Command Module follow, including:

- ESD precautions
- Soldering printed circuit boards
- Post-repair safety checks

CAUTION **Do not touch the command module edge connector pins at any time unless you are actively using a static-free workstation.**

ESD Precautions

Electrostatic discharge (ESD) may damage CMOS and other static-sensitive devices in the command modules such as ROM or RAM ICs. This damage can range from slight parameter degradation to catastrophic failure. When handling command modules, follow these guidelines to avoid damaging components:

- Always use a static-free work station with a pad of conductive rubber or similar material when handling command module components.
- After you remove a module from the frame, place the module on a conductive surface to guard against ESD damage.
- Do not use pliers to remove a CMOS device from a high-grip socket. Instead, use a small screwdriver to pry the device up from one end. Slowly lift the device up, one pair of pins at a time.
- After you remove a CMOS device from a module, place the device onto a pad of conductive foam or other suitable holding material.
- If a device requires soldering, be sure the device is placed on a pad of conductive material. Also, be sure you, the pad, and the soldering iron tip are grounded to the device. Apply as little heat as possible when soldering.

Soldering Printed Circuit Boards

The etched circuit boards on command module printed circuit assemblies (PCAs) have plated-through holes that allow a solder path to both sides of the insulating material. Soldering can be done from either side of the board with equally good results. When soldering to any circuit board, keep in mind the following guidelines:

CAUTION **Do not use a sharp metal object such as an awl or twist drill, since sharp objects may damage the plated-through conductor.**

- Avoid unnecessary component unsoldering and soldering. Excessive replacement can result in damage to the circuit board and/or adjacent components.
- Do not use a high power (>30 watts) soldering iron on etched circuit boards, as excessive heat may lift a conductor or damage the board.
- Use a suction device or wooden toothpick to remove solder from component mounting holes. When using a suction device, be sure the equipment is properly grounded to prevent electrostatic discharge from damaging CMOS devices.

Post-Repair Safety Checks

After making repairs to command module components, inspect the device for any signs of abnormal internally generated heat, such as discolored printed circuit boards or components, damaged insulation, or evidence of arcing. Determine and correct the cause of the condition. Then, run the power-on self-test to verify that the command module is operational.

NOTE **As desired, you may want to run one or more of the functional verification tests in Chapter 2 - Verification Tests.**

Returning an Keysight E1406A

Use the following procedures to return an Keysight E1406A Command Module to Keysight Technologies.

1 Determine the Module Version

[a] If the model label is attached to the bottom shield of the command module (see Figure 4-3 for location), note the model number on the upper label of the bottom shield of the module.

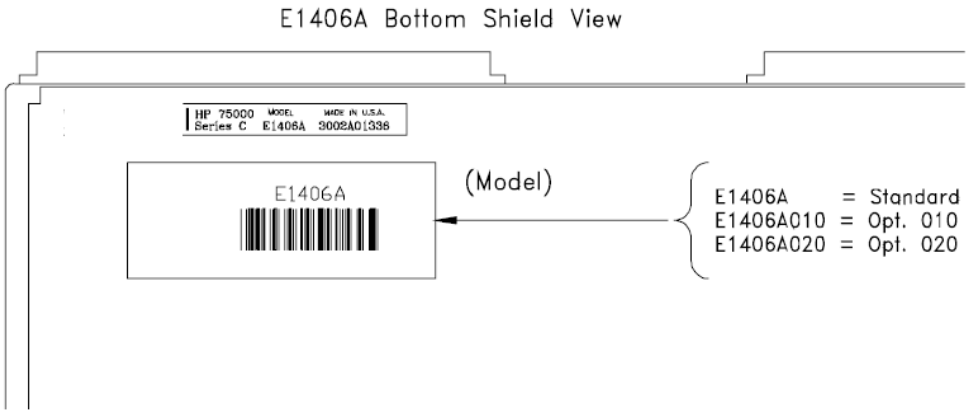

Figure 4-3 Keysight E1406A Option Numbers

[b] If the model label has been removed from the bottom shield of the command module, you will need to look at the A2 memory board part number to determine the version. To do this, perform Steps 1 through 3 in the "Command Modules Disassembly" section to remove the top shield and the A2 memory board. Note the A2 memory board part number (see Figure 4-4).

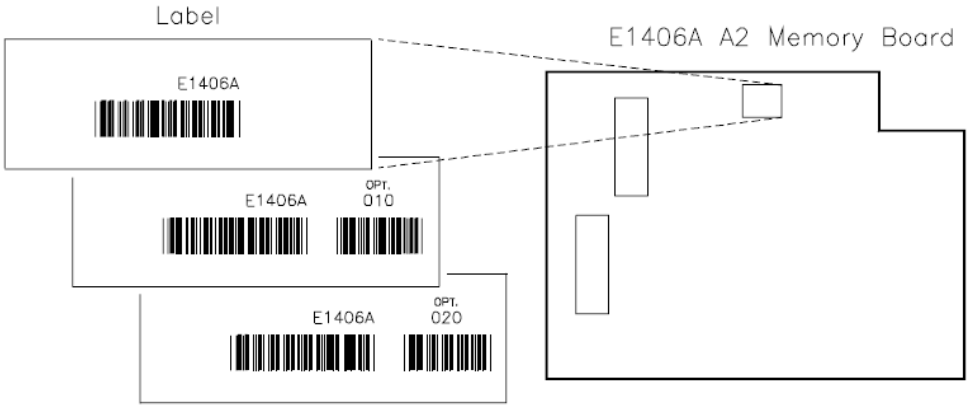

Figure 4-4 Keysight E1406A Memory Board Part Numbers

2 Ship the Module to Keysight Technologies

Package the module and ship it to Keysight Technologies. See Chapter 1 - General Information for packaging details.

5 Error Messages

Introduction

This chapter shows how to read the Keysight E 1406A Command Modules error queue, and provides error message listings and probable causes.

Error Message Types

Table 5-1 shows the four categories of error messages for the Keysight E 1406A Command Modules. See the following tables for error message descriptions:

- Language Related Errors . . . . . Table 5-2
- Configuration Errors . . . . . Table 5-3
- System Instrument Errors . . . . . Table 5-4
- Operating System Errors . . . . . Table 5-5

Table 5-1 Keysight E1406A Command Modules Error Messages

Type/Error Numbers	Description
Language Related Errors (-100 to -499)	Command Errors (-100 to -199):The instrum ent cannot understand or execute the command. Execution Errors (-200 to -299): The instrum ent is incapable of doing the action or operation requested by a com m and. Device-Specific Errors (-300 to -399): Indicates an instrument operation did not complete, possibly due to an abnormal hardware or firm ware condition. Query Errors (-400 to -499): A problem has occurred in the instrum ent's output queue.
Configuration Errors (1 to 999)	Generally occur most often just after the mainframe is powered up or rebooted (DIAG:BOOT). Read these messages from the error queue with SYST:ERR?.
System Instrument Errors (1000 - up)	Error messages 1500 through 2810 apply to the command module System Instrument. Read these messages from the error queue with SYST:ERR?.

Table 5-1 Keysight E1406A Command Modules Error Messages (continued)

Operating System Errors (No error numbers)	System Errors: Generally halts instrum ent operation. Read errors from a term inal connected to the RS-232 port of the com m and m odule. Hardware Errors: Indicates m ajor hardware failure of com m and m odule. Usually requires returning the m odule to Keysight Technologies for service. Read errors from a term inal connected to the RS-232 port of the com m and m odule. Power-On Diagnostics Errors: Typically RAM or ROM errors. Read errors from a term inal connected to the RS-232 port of the com m and m odule. Self-Test Errors: Tests ROM Chips and ROM Checksum . Read errors from a term inal connected to the RS-232 port of the com m and m odule. Interrupt Errors; Typically bus or switch configuration errors. Read errors from a term inal connected to the RS-232 port of the com m and m odule.

Configuration Errors

Command module error messages associated with system installation and configuration are listed in Table 5-3. These errors are displayed if a terminal or a printer is connected to the R S-232 port of the command module.

If a printer or terminal is not used, error messages can be read from the system instrument error queue, using SYST:E R R ?. E xecuting the SYST:E R R ? command reads the oldest error message from the instrument's error queue and erases that error from the error queue. An example program follows.

Example: Reading the Error Queue

This program reads all errors (one error at a time, oldest to newest) from the system instrument's (command module) error queue. After reading each error, that error is automatically erased from the queue. When the error queue is empty, this program returns: + 0,"No error".

```
10  DIM Err_msg$[ 256]Create array for error message
20REPEATRepeat until no errors in queue
30OUTPUT 70900;"SYST:ERR?"Read error message
40ENTER 70900;Err_msg$Enter results
50PRINT Err_msg$Display results
60UNTIL Err_msg$= "+ 0," “ No error” ""
70  END
```

NOTE E rror codes read from the error queue are preceded by the num ber 21. For exam ple, error code 11 displayed on an R S-232 term inal or printer appears as 2111 when returned by the SYST :ERR? com m and.

NOTE If a fatal error has occurred and the system instrument has not started, SYST :ERR? cannot be used to read the error queue.

Table 5-2 Language Related Errors

Code	Message	Cause
Command Errors		
- 101	INVALID CHARACTER	Unrecognized character in specified parameter.
- 102	SYNTAX ERROR	Command is missing a space or comma between parameters
- 103	INVALID SEPARATOR	Com m and param eter separated by som e character other than a com m a.
- 104	DATA TYPE ERROR	The wrong data type (i.e. num ber, character, string expression) was used when specifying a param eter.
- 108	PARAMETER NOT ALLOWED	Param eter specified in a com m and which does not require one.
- 109	MISSING PARAMETER	No param eter specified in com m and in which a param eter is required.
- 113	UNDEFINED HEADER	Com m and header was incorrectly specified.
- 123	NUMERIC OVERFLOW	A param eter specifies a value greater than the com m and allows.
- 128	NUMERIC DATA NOT ALLOWED	A num ber was specified for a param eter when a letter is required.
- 131	INVALID SUFFIX	Param eter suffix incorrectly specified (e.g. .5SECOND rather than .5S).
- 138	SUFFIX NOT ALLOWED	Param eter suffix is specified when one is not allowed.
- 141	INVALID CHARACTER DATA	The discrete param eter specified is not allowed.
- 160	BLOCK DATA ERROR	The block sent either contained m ore data than the flash ROM's could hold or the block count field disagreed with the num ber of bytes sent.
- 178	EXPRESSION DATA NOT ALLOWED	A param eter other than the channel list is enclosed in parentheses.
Execution Errors		
- 211	TRIGGER IGNORED	Trigger occurred from a source other than the specified source.
- 222	DATA OUT OF RANGE	The param eter value specified is too large or too sm all.
- 224	ILLEGAL PARAMETER VALUE	The num eric value specified is not allowed.
- 240	HARDWARE ERROR	Hardware error detected during power-on cycle.
- 252	MISSING MEDIA	No program m able ROM was found, or hardware m alfunction.

Table 5-2 Language Related Errors (continued)

- 253	CORRUPT MEDIA	An incorrect checksum was read from the program m ed ROMs. This is indicative of a ROM hardware m alfunction or a data transm ission error.
- 258	MEDIA PROTECTED	A command was executed with the “RUN/LOAD” switch in the “RUN” position when it should be in the “LOAD” position.
Device-Specific Errors		
- 310	SYSTEM ERROR	If caused by * DMC, then m acro m em ory is full.
- 350	TOO MANY ERRORS	The error queue is full as m ore than 30 errors have occurred.
Query Errors		
- 410	QUERY INTERRUPTED	Data not read from output buffer before another com m and is executed.
- 420	QUERY UNTERMINATED	Multim eter config. error didn’t let com m and finish executing.
- 430	QUERY DEADLOCKED	Com m and execution cannot continue as m ainfram e’s com m and input and data output buffers are full. Clearing the instrum ent restores control.

Table 5-3 Command Module Resource Manager Configuration Errors

Error	Message	Cause
1	FAILED DEVICE	A device failed its power-on self test. A device is failed if the resource manager finds the PASSED bit false. The test is done five seconds after power-on, or when the operating system has determined that * SYSFAIL is not asserted.
2	UNABLE TO COMBINE DEVICE	A device cannot be combined as part of a virtual instrument.
3 WARNING	DEVICE DRIVER NOT FOUND	A device’s VXI driver is not in the command module. The resource manager expects to find a driver for all register-based or message-based devices that are not I or I4. The devices can still be accessed through their registers.
4	DC DEVICE ADDRESS BLOCK TOO BIG	The block of addresses required to dynamically configure devices is greater than 127. The VXI specification allows blocks larger than 127. However, due to the VXI specification restrictions on where DC blocks can be located, the resource manager rejects blocks larger than 127 since these blocks would have to start at either 0 which is used by the resource manager, or use address 255 which disables dynamic configuration.
5	A24 MEMORY OVERFLOW	There is not enough available A24 memory required for a device. The allowable memory space is from 200000h to FFFFFFh (E00000h - FFFFFFh is only used if there is an 8 Mbyte device in the system). If your system has (mainframe) extenders, try using the user-defined extender table to allocate the memory more efficiently.

Table 5-3 Command Module Resource Manager Configuration Errors (continued)

6	A32 MEMORY OVERFLOW	There is not enough available A32 memory required for a device. The allowable memory space is from 20000000h to FFFFFFFFh (E0000000h - FFFFFFFFh is only used if there is a 2000 Mbyte device in the system). If your system has (mainframe) extenders, try using the user-defined extender table to allocate the memory more efficiently.
7	DC DEVICE MOVE FAILED	A dynamically configured device did not move to its new logical address. After setting a DC device (or a block of devices), the resource manager checks the new address(es) to see if the device actually moved.
8	INACCESSIBLE A24 MEMORY	An A24 memory device has memory below 200000h or above DFFFFFh. The command module cannot access this memory.
9	UNABLE TO MOVE DC DEVICE	There is no logical address (or address block) available for a dynamically configured device to move to. Try using a user-defined dynamic configuration table or the user-defined extender table to assign the addresses more efficiently.
10	INSUFFICIENT SYSTEM MEMORY	Too many instruments installed for the amount of RAM available in the command module. Only the system instrument is started.
11	INVALID INSTRUMENT ADDRESS	A module's logical address is not a multiple of 8, or is not part of a virtual instrument. Secondary GPIB addresses are only given to devices with logical addresses that are a multiple of eight.
12	INVALID UDEF COMMANDER LADD	The user-defined commander logical address is not a valid commander. Either the commander does not exist, or it is not a message-based commander.
14	INVALID UDEF SECONDARY ADDRESS	Invalid user-defined secondary address specified in the commander/servant hierarchy table. The secondary address specified was not 0 - 30, the address was 0 which is the command module address, or the module in not in the servant area of the command module.
15	DUPLICATE SECONDARY ADDRESS	The same secondary address way specified for more than one module in the user-defined commander/servant hierarchy table.
16	INVALID SERVANT AREA	The servant area of a commander is greater than 255, or the servant area of a servant module is greater than that of its commander. An invalid servant area is truncated to an allowable range and system configuration continues.
17	SLOT 0 FUNCTIONS DISABLED	The command module is installed in slot 0 and its Slot 0 and System Controller switches are set to 'Disable'.
18	INVALID COMMANDER LADD	The commander specified in the user-defined commander/servant hierarchy table is not a valid message-based commander, or the device does not exist.

Table 5-3 Command Module Resource Manager Configuration Errors (continued)

19	BNO FAILED	BNO was issued to a message-based device whose response indicated an error condition. The Begin Normal Operation command may have failed or the device returned a response other than FFFEh. (See the VXI specification for a description of the BNO response.)
20	WRITE READY TIMEOUT	The command module timed out waiting for write ready to be asserted by a message-based device. The command module/ resource manager was attempting to send a word serial command to a message-based device but write ready was not asserted on the device within 60 seconds. This can occur either before or after the command was sent. If before, the command module timed out without sending the command. If after, the command module timed out while determining if ERR* was asserted by the message-based device.
21	READ READY TIMEOUT	The command module timed out waiting for read ready to be asserted by a message-based device. The command module was attempting to read the response to a message-based query command, but read ready was not asserted by the device within 60 seconds.
22	ERR* ASSERTED	A word serial protocol error occurred. The command module/ resource manage detected a word serial protocol violation due to a word serial command. The command module checks for ERR* asserted before and after sending a word serial command to a message-based device. If ERR* is asserted before, the command is not sent. This error also occurs if the command module is not the resource manager and it receives a word serial command it does not recognize.
23	ENO FAILED	ENO was issued to a message-based device whose response indicated an error condition. Proper ending of normal operation is the response FFFEh.
24	INTERRUPT LINE UNAVAILABLE	The interrupt line assigned by the user-defined interrupt line table is not available. Either the line has been assigned or has been reserved. This error also occurs if the line being assigned to an interrupter is not handled by the interrupter's commander.
25	INVALID UDEF HANDLER	A user-defined interrupt handler specified in the intrrupt line allocation table is invalid. The handler logical address may not be valid, the device may not be a programmable handler, or the device has been assigned as many lines as it can handle.
26	INVALID UDEF INTERRUPTER	A user-defined interrupter specified in the interrupt line allocation table is not a valid interrupter. The interrupter logical address may not be valid, the device may not be a programmable interrupter, or the device has been assigned as many lines as it can interrupt on.

Table 5-3 Command Module Resource Manager Configuration Errors (continued)

27 WARNING	DIAGNOSTIC MODE ON	The diagnostic switch on the command module is set to '1'. Only the system instrument is started. No other modules receive BNO.
28 WARNING	RESOURCE MANAGER NOT IN SLOT 0	The command module is the resource manager (logical address = 0) but is not installed in slot 0. The command module will configure the system but will not do dynamic configuration.
29 WARNING	SYSFAIL DETECTED	SYSFAIL occurred during operation. The resource manager reboots.
30	PSEUDO INSTRUMENT LADD UNAVAILABLE	The logical address requested by a pseudo instrument (e.g., IBASIC) is already in use. Pseudo devices request a particular logical address. This error occurs if the logical address is used by a static or dynamically configured device.
31	FILE SYSTEM STARTUP FAILED	There is not enough memory in the command module to set up the file system required for IBASIC.
32	INACCESSIBLE A32 MEMORY	An A32 device has memory below 20000000h or above DFFFFFFFh. The command module can assign, but cannot access, A32 memory.
33	INVALID UDEF MEMORY BLOCK	The base address specified in the A24/A32 address allocation table is invalid, or the address block exceeds FFFFFFh in A24 memory.
34	UDEF MEMORY BLOCK UNAVAILABLE	The memory block specified in the A24/A32 address allocation table has already been assigned. Also, in a system with VXI-MXI VXIbus extenders, A24/A32 window restrictions may force some addresses to unavailable on a given VMEbus.
35	INVALID UDEF ADDRESS SPACE	An invalid A24/A32 addres sspace specifier was used in the A24/A32 address allocation table.
36	DUPLICATE UDEF MEMORY LADD	A logical address is specified more than once in the same A24/A32 address allocation table.
37	INVALID UDEF CNFG TABLE	The valid flag in the user-defined commander/servant hierarchy table in not true (1). VXI:CONF:CTAB < address> has been set but is pointing to an invalid table. Either the table is corrupt or has not been downloaded.
38	INVALID UDEF CNFG TABLE DATA	There are 0, or greater than 254 entries, in the user-defined commander/servant hierarchy table.
39	INVALID UDEF DC TABLE	The valid flag in the user-defined dynamic configuration table is not true (1). VXI:CONF:DCT < address> has been set but is pointing to an invalid table. Either the table is corrupt or has not been downloaded.
40	INVALID UDEF DC TABLE DATA	There are 0, or greater than 254 entries, in the user-defined dynamic configuration table.

Table 5-3 Command Module Resource Manager Configuration Errors (continued)

41	INVALID UDEF INTR TABLE	The valid flag in the user-defined interrupt line allocation table is not true (1). VXI:CONF:ITAB < address> has been set but is pointing to an invalid table. Either the table is corrupt or has not been downloaded.
42	INVALID UDEF INTR TABLE DATA	The interrupt line allocation table has invalid data. The number of records is less than 1 or greater than 7, the interrupt line specified is less than 1 or greater than 7, or the number of interrupters or handler ID is less than 1 or greater than 254.
43	INVALID UDEF MEM TABLE	The valid flag in the user-defined A24/A32 address allocation table is not true (1). VXI:CONF:MTAB < address> has been set but is pointing to an invalid table. Either the table is corrupt or has not been downloaded.
44	INVALID UDEF MEM TABLE DATA	An invalid logical address was specified in the A24/A32 address allocation table. The logical address range is 0 to 255 or -1.
45 WARNING	NVRAM CONTENTS LOST	System non-volatile memory was cleared during a re-boot. DIAG:BOOT:COLD was executed or the memory had an invalid checksum. Backup battery may be disconnected or discharged.
46	MESG BASED OPEN ACCESS FAILED	IBASIC or GPIB access to a message-based device failed because of a device failure. The resource manager tries to open a path between the GPIB port and/or IBASIC and message-based devices (I and I4) using word serial commands. The device either failed to respond, or the device violates the VXI word serial protocol specification.
47	GRANTED DEVICE NOT FOUND	The command module, when not the resource manager, was granted a device that does not exist.
48 WARNING	DRAM CONTENTS LOST	Downloaded driver non-volatile memory was cleared during a re-boot. DIAG:BOOT:COLD was executed or the memory had an invalid checksum. Backup battery may be disconnected or discharged.
49	VME SYSTEM CONTROLLER DISABLED	The System Controller switch on the command module is set to the 'Disable' position.
50	EXTENDER NOT SLOT 0 DEVICE	A VXI-MXI mainframe extender module is not in slot 0 of its (remote) mainframe.
51	INVALID EXTENDER LADD WINDOW	Modules do not fit in the logical address window set by the user-defined extender table. Not all of the devices found "below" an extender will fit into the largest available window for that extender. Either reset the logical addresses or use the extender table to override the default algorithm.

Table 5-3 Command Module Resource Manager Configuration Errors (continued)

52	DEVICE OUTSIDE OF LADD WINDOW	A module in an (extender) mainframe is outside of the logical address window set by the resource manager or set by the user-defined extender table. Either reset the logical addresses or download a new extender table.
53	INVALID EXTENDER A24 WINDOW	The resource manager found an invalid start address or size for an extender A24 address window. Either reconfigure the VME memory devices or use the extender table.
54	DEVICE OUTSIDE OF A24 WINDOW	A module with A24 memory is located outside of the extender logical address window. Either reconfigure the VME memory devices or use the extender table.
55	INVALID EXTENDER A32 WINDOW	The resource manager found an invalid start address or size for an extender A32 address window. Either reconfigure the VME memory devices or use the extender table.
56	DEVICE OUTSIDE OF A32 WINDOW	A module with A32 memory is located outside of the extender logical address window. Either reconfigure the VME memory devices or use the extender table.
57	INVALID UDEF LADD WINDOW	A user-defined logical address window violates the VXI-6 specification (has an invalid base or size).
58	INVALID UDEF A16 WINDOW	A user-defined A16 window violates the VXI-6 specification (has an invalid base or size).
59	INVALID UDEF A24 WINDOW	A user-defined A24 window violates the VXI-6 specification (has an invalid base or size).
60	INVALID UDEF A32 WINDOW	A user-defined A32 window violates the VXI-6 specification (has an invalid base or size).
61	INVALID UDEF EXT TABLE	The valid flag in the user-defined extender table is not true (1). The valid flag must be set to ’1’ or the table is assumed to be invalid. To disable the table without re-booting, set the table address to ’0’ using VXI:CONF:ETAB 0.
62	INVALID UDEF EXTENDER TABLE DATA	There is an invalid number of records in the user-defined extender table. The number of records must be a number between 1 and 254.
63	UNSUPPORTED UDEF TTL TRIGGER	There is a user-defined extender table TTL trigger entry for a VXI-MXI extender that does not support TTL triggers.
64	UNSUPPORTED UDEF ECL TRIGGER	There is a user-defined extender table ECL trigger entry for a VXI-MXI extender that does not support ECL triggers.
65	DEVICE NOT IN CONFIGURE STATE	A message-based device was not in the CONFIGURE state during a re-boot. The *SYSRESET should propagate to all mainframes through the INTX cables. Check the INTX connectors on remote mainframes.

Table 5-3 Command Module Resource Manager Configuration Errors (continued)

66	INTX CARD NOT INSTALLED	INTX daughter card is not installed on the VXI-MXI extender module. The resource manager expects the INTX card to be installed in order for *SYSRESET and interrupts to propagate throughout the system.
67	FLASH ROM DRIVER CONTENTS LOST	The contents of the FLASH ROM driver area have been corrupted.

Table 5-4 System Instrument Errors

Code	Message	Cause
1000	OUT OF MEMORY	There is not enough available Flash ROM to create a FROM driver area.
1500	EXTERNAL TRIGGER SOURCE ALREADY ALLOCATED	"Event In" signal already allocated to another instrument such as a Switchbox.
2002	INVALID LOGICAL ADDRESS	A value less than 0 or greater than 255 was specified for logical address.
2003	INVALID WORD ADDRESS	An odd address was specified for a 16-bit read or write. Always use an even address for 16-bit (word) accesses.
2005	NO CARD AT LOGICAL ADDRESS	A non-existant logical address was specified with the VXI:READ? or VXI:WRITE command.
2016	BYTE COUNT IS NOT A BULTIPLE OF TWO	The program block sent had an improper size.
2022	CONFIG. WARNING, RAM DISC VOLUME CONTENTS LOST	A RAM disc volume was removed after successful preprogramming of the Flash ROM's.
2023	FLASH DRIVER AREA NOT CREATED.	An attempt was made to install drivers before the DIAG:DRIV:INST command was executed.
2024	FLASH DRIVER AREA ALREADY INSTALLED	An attempt was made to install drivers after the DIAG:DRIV:INST command had already been executed.
2101	FAILED DEVICE	VXI device failed its self test.
2102	UNABLE TO COMBINE DEVICE	Device type cannot be combined into an instrument such as a scanning voltmeter or switchbox.
2103	CONFIG. WARNING, DEVICE DRIVER NOT FOUND	ID of device does not match list of drivers available. Warning only.
2105	CONFIG. ERROR 5, A24 MEMORY OVERFLOW	More A24 memory installed in the mainframe than can be configured into the available A24 memory space.

Table 5-4 System Instrument Errors (continued)

2108	CONFIG. ERROR 8	A 24 memory device overlaps memory space reserved by the mainframe's operating system.
2110	CONFIG. ERROR 10, INSUFFICIENT SYSTEM MEMORY	Too many instruments installed in the mainframe. Cannot configure instruments. Only the system instrument is started.
2111	CONFIG. ERROR 11, INVALID INSTRUMENT ADDRESS	A device's logical address is not a multiple of 8 and the device is not part of a combined instrument.
2112	INVALID USER DEFINED COMMANDER LOGICAL ADDRESS	The commander assigned to a device by a user defined Configuration Table does not assign it a secondary address.
2114	INVALID USER DEFINED SECONDARY ADDRESS	A secondary address assigned by a user configuration table is illegal.
2115	DUPLICATE SECONDARY ADDRESS	A secondary address assigned by a user configuration table is used more than once.
2116	INVALID SERVANT AREA	The logical address plus servant area of a commander is greater than 255 or greater than that of a superior commander within this tree.
2117	SLOT 0 FUNCTION DISABLED	A command module is in Slot 0 but Slot 0 switches are in the disabled position.
2118	INVALID COMMANDER LOGICAL ADDRESS	A device does not have a valid commander.
2119	BNO FAILED	Sending a BEGIN Normal Operation command to a device failed.
2120	WRITE READY TIMEOUT	A message based device failed to become write ready.
2121	READ READY TIMEOUT	A message based device failed to become read ready.
2122	ERR* ASSERTED	The ERR* bit is asserted in a device's response register.
2123	ENO FAILED	Sending an End Normal Operation command to a device failed.
2124	INTERRUPT LINE UNAVAILABLE	No line is available for a programmable interrupt handler. All lines are used or duplicate.
2125	INVALID USER DEFINED HANDLER	The user defined interrupt table specifies a device that is not a programmable interrupt handler, or does not exist.
2126	INVALID USER DEFINED INTERRUPTER	The user defined interrupt table specifies a device that is not a programmable interrupter, or does not exist.
2127	DIAGNOSTIC MODE ON	GPIB address switch bit 6 is set wrong (warning only).
2128	RESOURCE MANAGER NOT IN SLOT 0	A Command Module is configured for Slot 0 and Resource Manager but is installed in another slot (warning only).
2129	WARNING, SYSFAIL DETECTED	A device was asserting SYSFAIL on the backplane during startup.
2130	PSEUDO INSTRUMENT LOGICAL ADDRESS UNAVAILABLE	A physical device has the same logical address as IBASIC (240).

Table 5-4 System Instrument Errors (continued)

2131	FILE SYSTEM STARTUP FAILED	Insufficient system resources to allow the IBASIC file system to start.
2133	INVALID UDEF MEMORY BLOCK	Invalid memory block in user define memory table.
2134	UDEF MEMORY BLOCK UNAVAILABLE	The same base address or memory are specified more than once in the Memory table, or the addresses in the specified block are already in use.
2135	INVALID UDEF ADDRESS SPACE	The address specified in the Memory table is A24 but the device is A32, or vice versa.
2136	DUPLICATE UDEF MEMORY LADD	A logical address is specified more than once in the Memory table. This does not apply to VME devices (address = -1).
2137	INVALID UDEF CNFG TABLE	The valid flag in the Commander/Servant heirarchy table is not set to 1.
2138	INVALID UDEF CNFG TABLE DATA	There are more than 254 entries in the Commander/Servant Heirarchy table.
2139	INVALID UDEF DC TABLE	The valid flag in the Dynamic Configuration table is not set to 1.
2140	INVALID DC TABLE DATA	There are more than 254 entries in the Dynamic configuration table.
2141	INVALID UDEF INTERRUPTER	The logical address specified for an interpreter is a device that is not an interpreter.
2142	INVALID UDEF INTR TABLE	The interpreter table valid flag is not 1.
2143	INVALID UDEF MEM TABLE	The valid flag in the Memory table is not set to 1.
2144	INVALID UDEF MEM TABLE DATA	An invalid logical address is specified in the Memory table.
2145	WARNING, NON-VOLATILE RAM CONTENTS LOST	Non-volatile RAM was corrupted, a cold boot was executed, or non-volatile RAM was removed after the successful programming of the Flash ROMs.
2146	MESG BASED OPEN ACCESS FAILED	I or I4 device is violating VXI specification.
2147	GRANTED DEVICE NOT FOUND	An Keysight E1406 which is not a slot 0 device or a recource manager could not find a module that was granted to its servant area.
2148	CONFIG. WARNING 48, DRIVER RAM CONTENTS LOST	Driver RAM was corrupted, a cold boot was executed, or driver RAM was removed after the successful programming of the Flash ROMs.
2149	VME SYSTEM CONTROLLER DISABLED	VME SYSTEM CONTROLLER switch is disabled on the Keysight E1406A module.
2150	EXTENDER NOT SLOT 0 DEVICE	VXIbus extender in remote mainframe is not in slot 0 of its mainframe.
2151	INVALID EXTENDER LADD WINDOW	MXI extender cannot be configured with a valid A24 memory window.
2152	DEVICE OUTSIDE OF LADD WINDOW	A device is located outside the allowable logical address window range of a MXIbus extender.

Table 5-4 System Instrument Errors (continued)

2153	INVALID EXTENDER A24 WINDOW	MXIbus extender cannot be configured with a valid A32 memory window.
2154	DEVICE OUTSIDE OF A24 WINDOW	An A24 memory device is located outside the allowable logical address window range of a MXIbus extender.
2155	INVALID EXTENDER A32 WINDOW	MXIbus extender cannot be configured with a valid A32 memory window.
2156	DEVICE OUTSIDE OF A32 WINDOW	An A32 memory device is located outside the allowable logical address window range of a MXIbus extender.
2157	INVALID UDEF LADD WINDOW	User defined logical address window has incorrect base address or size.
2158	INVALID UDEF A16 WINDOW	User defined A16 memory window has incorrect base address or size.
2159	INVALID UDEF A24 WINDOW	User defined A24 memory window has incorrect base address or size.
2160	INVALID UDEF A32 WINDOW	User defined A32 memory window has incorrect base address or size.
2161	INVALID UDEF EXT TABLE	The valid flag in the Extender table is not set to 1.
2162	INVALID UDEF EXTENDER TABLE DATA	There are more than 254 records in the Extender table.
2163	UNSUPPORTED UDEF TTL TRIGGER	There is an Extender table TTL trigger entry for a device which does not support TTL triggers.
2164	UNSUPPORTED UDEF ECL TRIGGER	There is an Extender table ECL trigger entry for a device which does not support ECL triggers.
2165	DEVICE NOT IN CONFIGURE STATE	A message based device was not in CONFIGURE state during re-boot.
2166	INTX CARD NOT INSTALLED	The INTX daughter card on the VXI-MXI module is not installed or is not functioning properly.
2167	CONFIG WARNING, FLASH ROM DRIVER CONTENTS LOST	The contents of the Flash ROM driver area have been corrupted.
2201	UNEXPECTED INTERRUPT FROM MESSAGE BASED CARD	A message based card interrupted when an interrupt service routine has not been set up.
2202	UNEXPECTED INTERRUPT FROM NON-MESSAGE BASED CARD	A register based card interrupted when an interrupt service routine had not been set up.
2809	INTERRUPT LINE HAS NOT BEEN SET UP	A DIAG:INT:ACT or DIAG:INT:RESP command was executed before setting the interrupt with DIAG:INT:SET.
2810	NOT A HANDLER FOR THIS LINE	An attempt was made to set up an interrupt with DIAG:INT:SET for a line that has no handler. (see VXI:CONF:ITAB).

Table 5-5 Operating System Errors

Type	Message	Cause
System Errors	SYSTEM ERROR: Out of PCB Extensions	
	SYSTEM ERROR in os_fork_ui Error Status: SYSTEM ERROR in os_fork_twin Error Status: SYSTEM ERROR in os_fork_display Error Status:	Usually caused by adding non-Keysight cards. To correct, remove non-Keysight register-based cards and re-boot. If the error reoccurs, replace ROMs.
	SYSTEM ERR: Instrument HALT OS Call: Status:	Software error in the Instrument Driver
	SYSTEM ERROR: Unused Exception Vector SYSTEM ERROR: Uninitialized GPIB IRQ SYSTEM ERROR: Uninitialized GPIB BI SYSTEM ERROR: Uninitialized GPIB BO SYSTEM ERROR: Uninitialized GPIB REN SYSTEM ERROR: Uninitialized UART IRQ SYSTEM ERROR: Unused Jmp Tbl Entry Call SYSTEM ERROR: Uninitialized KBD IRQ SYSTEM ERROR: Uninitialized PACER IRQ	Broken gate array or defective MC 68000 chip
	SYSTEM ERROR: VXIbus SYSFAIL Asserted Card at Logical Address: No Card Claims SYSFAIL. Check Card LEDs	The VXIbus SYSFAIL line is asserted and the card at Logical Address shown failed OR no card claims failure.
	SYSTEM ERROR: AC Power Failure	Power brownout or power supply did not reset
	SYSTEM ERROR: Uninitialized Trigger IRQ	
	SYSTEM ERROR: Unmapped Gate Array IRQ Hex Vector Number:	Defective gate array
	SYSTEM ERROR: ISR Signal Parent Failed Parent PID:	Defective ROM or MC 68000 chip

Table 5-5 Operating System Errors (continued)

Hardware Errors	SYSTEM ERROR: Uninitialized CHECK Trap SYSTEM ERROR: Uninitialized TRAPV Trap SYSTEM ERROR: Privileged Instruction SYSTEM ERROR: Uninitialized TRACE Trap SYSTEM ERROR: Uninitialized L1010 Trap SYSTEM ERROR: Uninitialized L1111 Trap SYSTEM ERROR: Format Error Trap SYSTEM ERROR: Uninitialized Vector 15 SYSTEM ERROR: Uninitialized TRAP4 SYSTEM ERROR: Uninitialized TRAP5 SYSTEM ERROR: Uninitialized TRAP6 SYSTEM ERROR: Uninitialized TRAP7 SYSTEM ERROR: Uninitialized TRAP8 SYSTEM ERROR: Uninitialized TRAP9 SYSTEM ERROR: Uninitialized TRAP10 SYSTEM ERROR: Uninitialized TRAP11 SYSTEM ERROR: Uninitialized TRAP12 SYSTEM ERROR: Uninitialized TRAP13 SYSTEM ERROR: Uninitialized TRAP14 SYSTEM ERROR: Uninitialized TRAP15	Defective gate array, MC 68000 chip or ROM
Power-On Diagnostics Error Messages	Testing CPU Testing ROM Passed	If “Testing CPU” or “Testing ROM” message lasts more than 5 seconds, the CPU board is defective.
	Downloaded Driver RAM Corrupt	Use DIAG:BOOT:COLD and reload drivers
	Nonvolatile RAM Contents Lost	Use DIAG:BOOT:COLD and check backup battery
	Self Test Failure: BAD RAM	Defective RAM, replace CPU board
	Testing 64K Bytes RAM Testing 128K Bytes RAM Testing 256K Bytes RAM Testing 512K Bytes RAM	Information on amount of RAM found
Power-On Diagnostics Error Messages (cont’d)	Testing 768 K Bytes RAM Testing 1M Bytes RAM Testing 1.25M Bytes RAM Testing 1.5M Bytes RAM Testing 2M Bytes RAM	Information on amount of RAM found

Table 5-5 Operating System Errors (continued)

Self-Test Error Messages	Self Test: Error	
	Self Test: Gate Array Error Bad ROM Checksum Self Test: RAM Error at Address:	For “Gate Array Error”, replace gate array. For “Bad ROM Checksum”, replace ROM. For “RAM Error”, replace RAM
	in Bus Error Register in Interrupt Mode Register in Interrupt Mask Register in Pacer Control Register in Interrupt Priority Register in PSOS Tick Register on RS232 IC on Key Board Scan IC Bus Error Timeout Interrupt Control Register No Clock Tick Interrupt No Pacer Interrupt	Defective gate array
	No UART Interrupt	Defective 16550 chip
	CPU Self Test Passed Bad ROM Chip Number U21 Bad ROM Chip Number U22 Bad ROM Chip Number U33 Bad ROM Chip Number U34 Bad ROM Chip Number U39 Bad ROM Chip Number U40	Replace ROM listed
Self Test Error Messages (cont’d)	Bad ROM Chip Number U41 Bad ROM Chip Number U43 Bad ROM Chip Number U44 Bad ROM Chip Number U45 Bad ROM Checksum - HALT	Replace ROM listed

Table 5-5 Operating System Errors (continued)

Interrupt Error Messages	Address: PC: SYSTEM ERROR: VXI “Command In” Interrupt SYSTEM ERROR: VXI “Signal In” Interrupt SYSTEM ERROR: VXI “Signal Fail” Interrupt SYSTEM ERROR: VXI “Data Out” Interrupt	These are message-based card errors (word-serial). For a “Command In” interrupt, message-based card sent a command that cannot be processed. For a “Signal In”, Signal Fail", or “Data Out” interrupt, a message-based card sent a signal that cannot be processed.
	SYSTEM ERROR: Uninitialized Interrupt From VXI Logical Address:	Defective message-based card
	SYSTEM ERROR: Bus Error Master State Bad	Defective CPU
	SYSTEM ERROR: Bus Error - VXI LADD n	Defective VXIbus card, Logical Address n
	SYSTEM ERROR: Bus Error in VME A16 Space SYSTEM ERROR: Bus Error in VME A24 Space	Defective ROM, CPU, or VXIbus card
	SYSTEM ERROR: Bus Error During ROM Access SYSTEM ERROR: Bus Error During RAM Access	Defective CPU card
	SYSTEM ERROR: Bus Error in Gate Array	Defective gate array
	SYSTEM ERROR: Bus Error on VXI During Init	Defective card on VXIbus
	SYSTEM ERROR: Bus Error ACKing VXI Intrupt Check Backplane Switch Configuration	Ensure that backplane IACK daisy chain is not broken
	SYSTEM ERROR: Bus Error on VXI by Instrument	
	SYSTEM ERROR: Odd Address Error SYSTEM ERROR: Illegal Instruction SYSTEM ERROR: Divide by Zero Trap SYSTEM ERROR: Spurious Interrupt	Defective ROM, CPU, or gate array

A Verification Tests - C Programs

Introduction

This example program is a menu driven version of all the programs found in Chapter 2 - Verification Tests. The program source code is provided on the disk included with this manual. The program, called function.c, was created with Borland® C+ + Visual E dition for Windows and requires the VISA Keysight I/O Library.

```
/*  Functional Verification Tests E1406A  * /
/* This program performs the functional verification tests * /
/* found in Chapter 2 - Verification Tests of the E1406A * /
/* Service Manual. * /
/* Program Rev. A.01.00 7/30/96 * /

# include < stdio.h>
# include < string.h>
# include < visa.h>

/* ------Function Prototypes------* /
void power_on_test (ViSession vi, ViStatus x);
void front_panel_outputs(ViSession vi, ViStatus x);
void general_system_information(ViSession vi, ViStatus x);
void hierarchy_device_information(ViSession vi, ViStatus x);
void table_memory_information(ViSession vi, ViStatus x); void
interrupt_status_information(ViSession vi, ViStatus x); void
triggering_information(ViSession vi, ViStatus x);
void serial_port_information(ViSession vi, ViStatus x);
void err_handler(ViSession vi, ViStatus x);

void main (void)
{
# if defined (_BORLANDC_) && !defined(_WIN32_)
_InitEasyWin();
# endif

# define CM_ADDRESS "GPIB-VXI0::9::0" float test_select;
/* ----Open device session----* /
```

```
ViStatus err;
ViSession defaultRM, cm;
viOpenDefaultRM (&defaultRM);
viOpen (defaultRM, CM_ADDRESS, VI_NULL, VI_NULL, &cm);

/* ----Set command module timeout----* /

viSetAttribute(cm, VI_ATTR_TMO_VALUE, 15000);

/* ----MENU for selection of tests----* /

do
{
do
{
printf ("\n\n******** Keysight E1406A Functional Verification
Test Menu ********\n\n");
printf ("Enter the number 0 through 8 of the test you wish to
perform:\n\n");
printf (" 0 for Test S-1:  GPIB Power-On Test\n");
printf (" 1 for Test F-1:  Front Panel Outputs\n");


printf (" 2 for Test F-2:  General System Information\n"); printf
(" 3 for Test F-3:  Hierarchy/Device Information\n"); printf (" 4
for Test F-4:  Table/Memory Information\n"); printf (" 5 for Test
F-5:  Interrupt/Status Information\n"); printf (" 6 for Test F-6:
Triggering Information\n");
printf (" 7 for Test F-7:  Serial Port Information\n");
printf (" 8 to quit testing\n\n");
printf ("Enter your selection = > ");

scanf ("%f", &test_select);

if (test_select > 8 | | test_select < 0)
{
printf ("\
n*******************************************************\n");
printf ("*  The number you entered was %3.1f. * \n",
test_select);
printf ("*  This is an invalid entry. Please enter a number 0
through 8 * \n");
printf
("*******************************************************\n");
}
```

```
}
while ((int)test_select > 8 | | (int)test_select < 0);

switch ((int)test_select)
{
case 0:power_on_test(cm,err);
break;
case 1:front_panel_outputs(cm,err);
break;
case 2:general_system_information(cm,err);
break;
case 3:hierarchy_device_information(cm,err);
break;
case 4:table_memory_information(cm,err);
break;
case 5:interrupt_status_information(cm,err);
break;
case 6:triggering_information(cm,err);
break;
case 7:serial_port_information(cm,err);
break;
case 8:printf ("\n*** End of testing ***\n");
break;
default:printf ("\nINVALID ENTRY\n");
}
}
while ((int)test_select != 8);

/* ----Close device session----* /

viClose(cm);

} /* end of main * /

/* ----- TEST S-1:  GPIB Power-On Test -----* /

void power_on_test (ViSession cm, ViStatus err)
{
char err_msg[256] = { 0} ;

fflush(stdin);
printf ("\nTest S-1: GPIB Power-On Test\n\n");
printf (" This test checks for power-on errors in the command
module\n");
printf (" To perform this test:\n\n");
```

```
printf (" 1. Turn mainframe power OFF\n");
printf (" 2. Remove all modules (except command module) from
mainframe\n");
printf (" 3. Turn mainframe power ON\n");
printf (" 4. Wait at least 5 seconds before running the test\n");
printf (" Press ENTER to run the GPIB power-on test");
getchar ();

printf ("\n\nGPIB Power-On Self-Test\n");
do
{

err= viPrintf(cm, "SYST:ERR?\n");
if(err< VI_SUCCESS) err_handler(cm,err);
err= viScanf(cm, "%t", err_msg);
if(err< VI_SUCCESS) err_handler(cm,err);
printf (" %s", err_msg);
}
while (err_msg[1] != ’0’);

return;
}

/* ----- TEST F-1:  Front Panel Outputs -----* /

void front_panel_outputs(ViSession cm, ViStatus err)
{
int result, i;

fflush(stdin);
printf ("\n*** Front Panel Outputs Test ***\n");
printf ("\nPart A: INTernal Trigger Source Test\n");
printf ("\n Connect oscilloscope to command module Trig Out port\
n");
printf (" Press ENTER when ready to run this test\n");
getchar ();

err= viPrintf(cm, "OUTP:EXT:STAT ON\n"); if(err< VI_SUCCESS)
err_handler(cm,err); err= viPrintf(cm, "OUTP:EXT:SOUR INT\n");
if(err< VI_SUCCESS) err_handler(cm,err); printf("\n Level should
be at + 5V\n");
printf(" Press ENTER to continue");
getchar();
err= viPrintf(cm, "OUTP:EXT:LEV ON\n");
if(err< VI_SUCCESS) err_handler(cm,err);
```

```
fflush(stdin);
printf ("\n Level should have dropped from + 5V to 0V\n");
printf (" Press ENTER to continue\n");
getchar ();

err= viPrintf(cm, "OUTP:EXT:LEV OFF\n");
if(err< VI_SUCCESS) err_handler(cm,err);

printf ("\nPart B: TTL/ECL Trigger Line Source Test\n");
printf ("\n Connect oscilloscope to command module Trig Out port\
n");
printf (" Press ENTER when ready to run this test\n");
getchar ();

for (i =  0;i <=  7;i ++)
{
printf ("Trigger line being tested is: TTLT%u\n", i); err=
viPrintf(cm, "OUTP:TTLT%u:STAT ON\n", i); if(err< VI_SUCCESS)
err_handler(cm,err);
err= viPrintf(cm, "OUTP:TTLT%u:SOUR INT\n", i);
if(err< VI_SUCCESS) err_handler(cm,err);
err= viPrintf(cm, "OUTP:EXT:STAT ON\n");
if(err< VI_SUCCESS) err_handler(cm,err);
err= viPrintf(cm, "OUTP:EXT:SOUR TTLT%u\n", i);
if(err< VI_SUCCESS) err_handler(cm,err);
err= viPrintf(cm, "OUTP:TTLT%u:LEV ON\n", i);
if(err< VI_SUCCESS) err_handler(cm,err);

printf ("\n Level should have dropped from + 5V to 0V\n");
printf (" Press ENTER to continue\n");
getchar ();

err= viPrintf(cm, "OUTP:TTLT%u:LEV OFF\n", i);
if(err< VI_SUCCESS) err_handler(cm,err);

printf ("Press ENTER to test next trigger line\n");
getchar ();
}

for (i =  0;i <=  1;i ++)
{
printf ("Trigger line being tested is: ECLT%u\n", i); err=
viPrintf(cm, "OUTP:ECLT%u:STAT ON\n", i); if(err< VI_SUCCESS)
err_handler(cm,err);
```

```
err= viPrintf(cm, "OUTP:ECLT%u:SOUR INT\n", i);
if(err< VI_SUCCESS) err_handler(cm,err); err= viPrintf(cm,
"OUTP:EXT:STAT ON\n"); if(err< VI_SUCCESS) err_handler(cm,err);
err= viPrintf(cm, "OUTP:EXT:SOUR ECLT%u\n", i);
if(err< VI_SUCCESS) err_handler(cm,err);
err= viPrintf(cm, "OUTP:ECLT%u:LEV ON\n", i);
if(err< VI_SUCCESS) err_handler(cm,err);

printf ("\n Level should have dropped from + 5V to 0V\n");
printf (" Press ENTER to continue\n");
getchar ();

err= viPrintf(cm, "OUTP:ECLT%u:LEV OFF\n", i);
if(err< VI_SUCCESS) err_handler(cm,err);

printf ("Press ENTER to test next trigger line\n");
getchar ();
}

printf ("\nPart C: Trig In Port Source Test\n");
printf ("\n Connect oscilloscope to command module Trig Out port\
n");
printf (" Press ENTER when ready to run this test\n");
getchar ();

for (i =  0;i <=  7;i ++)
{
printf ("Trigger line being tested is: TTLT%u\n", i); err=
viPrintf(cm, "OUTP:TTLT%u:STAT ON\n", i); if(err< VI_SUCCESS)
err_handler(cm,err);
err= viPrintf(cm, "OUTP:TTLT%u:SOUR EXT\n", i);
if(err< VI_SUCCESS) err_handler(cm,err);
err= viPrintf(cm, "OUTP:EXT:STAT ON\n");
if(err< VI_SUCCESS) err_handler(cm,err);
err= viPrintf(cm, "OUTP:EXT:SOUR TTLT%u\n", i);
if(err< VI_SUCCESS) err_handler(cm,err);

printf ("\n 1. Apply + 5V TTL signal to Trig In Port. Trig Out
level should go to 0V\n"); printf (" 2. Remove signal from Trig
In Port. Trig Out level should go to + 5V\n"); printf (" Press
ENTER to continue\n");
getchar ();
}

for (i =  0;i <=  1;i ++)
{
```

```
printf ("Trigger line being tested is: ECLT%u\n", i); err=
viPrintf(cm, "OUTP:ECLT%u:STAT ON\n", i); if(err< VI_SUCCESS)
err_handler(cm,err);
err= viPrintf(cm, "OUTP:ECLT%u:SOUR EXT\n", i);
if(err< VI_SUCCESS) err_handler(cm,err); err= viPrintf(cm,
"OUTP:EXT:STAT ON\n"); if(err< VI_SUCCESS) err_handler(cm,err);
err= viPrintf(cm, "OUTP:EXT:SOUR ECLT%u\n", i);
if(err< VI_SUCCESS) err_handler(cm,err);

printf ("\n 1. Apply + 5V TTL signal to Trig In Port. Trig Out
level should go to 0V\n"); printf (" 2. Remove signal from Trig
In Port. Trig Out level should go to + 5V\n"); printf (" Press
ENTER to continue\n");
getchar ();
}

printf ("\nPart D: 10 MHz Clk Out Signal Test\n");
printf ("\n Connect oscilloscope to command module Clk Out port\
n");
printf (" Press ENTER when ready to run this test\n");
getchar ();

printf (" Output should be a 5V pp square wave at 10 MHz\n");

printf (" Press ENTER when finished with this test");
getchar ();

return;
}

/* ----- TEST F-2:  General System Information -----* /

void general_system_information (ViSession cm, ViStatus err)
{
char result[256] = { 0} ;

printf ("\n*** General System Information ***\n\n");

err= viPrintf(cm, "SYST:COMM:GPIB:ADDR?\n"); /* Query GPIB
address * /
if(err< VI_SUCCESS) err_handler(cm,err);
err= viScanf(cm, "%t", result);
if(err< VI_SUCCESS) err_handler(cm,err);
printf (" -Command module GPIB address %s", result);
```

```
err= viPrintf(cm, "VXI:CONF:DNUM?\n"); /* Query number of
modules installed* /
if(err< VI_SUCCESS) err_handler(cm,err);
err= viScanf(cm, "%t", result);
if(err< VI_SUCCESS) err_handler(cm,err);
printf (" -Number of devices in the system  %s", result);

err= viPrintf(cm, "VXI:CONF:LADD?\n"); /* Query device logical
addresses * /
if(err< VI_SUCCESS) err_handler(cm,err);
err= viScanf(cm, "%t", result);
if(err< VI_SUCCESS) err_handler(cm,err);
printf (" -Device logical addresses %s", result);

err= viPrintf(cm, "SYST:VERS?\n"); /* Query version for SCPI
compliance* /
if(err< VI_SUCCESS) err_handler(cm,err);
err= viScanf(cm, "%t", result);
if(err< VI_SUCCESS) err_handler(cm,err);
printf (" -SCPI version for compliance %s", result);

err= viPrintf(cm, "SYST:DATE?\n"); /* Query current date setting
* /
if(err< VI_SUCCESS) err_handler(cm,err);
err= viScanf(cm, "%t", result);
if(err< VI_SUCCESS) err_handler(cm,err);
printf (" -Current date setting %s", result);

err= viPrintf(cm, "SYST:TIME?\n"); /* Query current time setting
* /
if(err< VI_SUCCESS) err_handler(cm,err);
err= viScanf(cm, "%t", result);
if(err< VI_SUCCESS) err_handler(cm,err);
printf (" -Current time setting %s", result);

return;
}

/* ----- TEST F-3:  Hierarchy/Device Information -----* /

void hierarchy_device_information (ViSession cm, ViStatus err)
{
char hier[1000], inf[1000], ladd[256];
int laddr, position, i;
```

```
printf ("\n*** Hierarchy/Device Information ***\n");

err= viPrintf(cm, "* RST\n");
if(err< VI_SUCCESS) err_handler(cm,err);
err= viPrintf(cm, "VXI:CONF:LADD?\n"); if(err< VI_SUCCESS)
err_handler(cm,err); err= viScanf(cm,"%t",ladd);
if(err< VI_SUCCESS) err_handler(cm,err);
printf ("\n System Logical Addresses are:  %s", ladd);

printf ("\n Enter the Logical Address of the module to check:");
scanf ("%u", &laddr);


err= viPrintf(cm, "VXI:SEL %u\n", laddr); if(err< VI_SUCCESS)
err_handler(cm,err); err= viPrintf(cm, "VXI:CONF:HIER?\n");
if(err< VI_SUCCESS) err_handler(cm,err); err= viScanf(cm, "%t",
hier);
if(err< VI_SUCCESS) err_handler(cm,err);

printf ("\n VXI:CONF:HIER? Command Results\n\n");
position = 0;
for (i =  1;i <=  17;i ++)
{
switch (i)
{
case 1:printf (" -Logical Address: ");
break;
case 2:printf (" -Commander’s Logical Address:  ");
break;
case 3:printf (" -Interrupt Handler 1: ");
break;
case 4:printf (" -Interrupt Handler 2: ");
break;
case 5:printf (" -Interrupt Handler 3: ");
break;
case 6:printf (" -Interrupt Handler 4: ");
break;
case 7:printf (" -Interrupt Handler 5: ");
break;
case 8:printf (" -Interrupt Handler 6: ");
break;
case 9:printf (" -Interrupt Handler 7: ");
break;
case 10:printf(" -Interrupter 1: ");
break;
```

```
case 11:printf(" -Interrupter 2: ");
break;
case 12:printf(" -Interrupter 3: ");
break;
case 13:printf(" -Interrupter 4: ");
break;
case 14:printf(" -Interrupter 5: ");
break;
case 15:printf(" -Interrupter 6: ");
break;
case 16:printf(" -Interrupter 7: ");
break;
case 17:printf(" -Pass/Failed: ");
break;
}
do
{
printf("%c", hier[position]);
position+ + ;
}
while ((hier[position] != ’,’)&(hier[position] != ’\n’));

position+ + ;
printf("\n");
}
printf(" -Manufacturers Coments:    %c", hier[position]);
do
{
position+ + ;
printf("%c", hier[position]);
}
while (hier[position]!= ’\n’);

fflush (stdin);
printf ("\n\n Record results as desired. Then press ENTER for
VXI:CONF:INF? results.\n");
getchar ();

err= viPrintf(cm, "VXI:CONF:INF?\n");
if(err< VI_SUCCESS) err_handler(cm,err);

err= viScanf(cm, "%t", inf);
if(err< VI_SUCCESS) err_handler(cm,err);

printf ("\n VXI:CONF:INF? Command Results\n\n");
```

```
position = 0;
for (i =  1;i <=  15;i ++)
{
switch (i)
{
case 1:printf (" -Logical Address: ");
break;
case 2:printf (" -Manufacturer ID: ");
break;
case 3:printf (" -Model Code: ");
break;
case 4:printf (" -Device Class: ");
break;
case 5:printf (" -Address Space: ");
break;
case 6:printf (" -A16 Memory Offset: ");
break;
case 7:printf (" -A24 Memory Offset: ");
break;
case 8:printf (" -A32 Memory Offset: ");
break;
case 9:printf (" -A16 Memory Size: ");
break;
case 10:printf(" -A24 Memory Size: ");
break;
case 11:printf(" -A32 Memory Size: ");
break;
case 12:printf(" -Slot Number: ");
break;
case 13:printf(" -Slot 0 Logical Address: ");
break;
case 14:printf(" -Subclass Register Contents:   ");
break;
case 15:printf(" -Attribute Register Contents:  ");
break;
}
do
{
printf("%c", inf[position]);
position+ + ;
}
while (inf[position] != ’,’);

position+ + ;
printf("\n");
```

```
}
printf(" -Manufacturers Coments:    %c", inf[position]);
do
{
position+ + ;
printf("%c", inf[position]);
}
while (inf[position]!= ’"’);

printf ("\n\n Record results as desired. Then press ENTER.\n");
getchar ();

return;
}

/* ----- TEST F-4:  Table/Memory Information -----* /

void table_memory_information(ViSession cm, ViStatus err)
{
char result[1000] = { 0} ;
int position;

err= viPrintf(cm, "VXI:CONF:CTAB?\n"); /* Cmdr/servant hierarchy
table address * /

if(err< VI_SUCCESS) err_handler(cm,err);
err= viScanf(cm, "%t", result);
if(err< VI_SUCCESS) err_handler(cm,err);
printf ("\nTest F-4:  Table/Memory Information\n\n");
printf ("Configuration Tables\n\n");
printf (" -Commander/Servant Hierarchy Table Address:  %s",
result);

err= viPrintf(cm, "VXI:CONF:DCT?\n"); /* Dynamic Configuration
Table Address * /
if(err< VI_SUCCESS) err_handler(cm,err);
err= viScanf(cm, "%t", result);
if(err< VI_SUCCESS) err_handler(cm,err);
printf (" -Dynamic Configuration Table Address: %s", result);

err= viPrintf(cm, "VXI:CONF:ETAB?\n"); /* Extender Device Table
Address * /
if(err< VI_SUCCESS) err_handler(cm,err);
err= viScanf(cm, "%t", result);
if(err< VI_SUCCESS) err_handler(cm,err);
```

```
printf (" -Extender Device Table Address: %s", result);

err= viPrintf(cm, "VXI:CONF:ITAB?\n"); /* Interrupt Line
Allocation Table Address * /
if(err< VI_SUCCESS) err_handler(cm,err);
err= viScanf(cm, "%t", result);
if(err< VI_SUCCESS) err_handler(cm,err);
printf (" -Interrupt Line Allocation Table Address:    %s",
result);

err= viPrintf(cm, "VXI:CONF:MTAB?\n"); /* A24/A32 Address
Allocation Table Address * /
if(err< VI_SUCCESS) err_handler(cm,err);
err= viScanf(cm, "%t", result);
if(err< VI_SUCCESS) err_handler(cm,err);
printf (" -A24/A32 Address Allocation Table Address:   %s",
result);

err= viPrintf(cm, "DIAG:NRAM:ADDR?\n"); /* NRAM Starting Address
* /
if(err< VI_SUCCESS) err_handler(cm,err);
err= viScanf(cm, "%t", result);
if(err< VI_SUCCESS) err_handler(cm,err);
printf ("\nCommand Module Memory\n\n");
printf (" -NRAM Starting Address: %s", result);

err= viPrintf(cm, "DIAG:NRAM:CRE?\n"); /* Current NRAM Size
(bytes) * /
if(err< VI_SUCCESS) err_handler(cm,err);
err= viScanf(cm, "%t", result);
if(err< VI_SUCCESS) err_handler(cm,err);
printf (" -Current NRAM Size (bytes): %s", result);

err= viPrintf(cm, "DIAG:NRAM:CRE? MAX\n");   /* Maximum NRAM Size
(bytes) * /
if(err< VI_SUCCESS) err_handler(cm,err);
err= viScanf(cm, "%t", result);
if(err< VI_SUCCESS) err_handler(cm,err);
printf (" -Maximum NRAM Size (bytes): %s", result);

err= viPrintf(cm, "DIAG:RDIS:ADDR?\n"); /* RDISK Starting
Address * /
if(err< VI_SUCCESS) err_handler(cm,err);
err= viScanf(cm, "%t", result);
if(err< VI_SUCCESS) err_handler(cm,err);
printf (" -RDISK Starting Address: %s", result);
```

```
err= viPrintf(cm, "DIAG:RDIS:CRE?\n"); /* Current RDISK Size
(bytes) * /
if(err< VI_SUCCESS) err_handler(cm,err);
err= viScanf(cm, "%t", result);
if(err< VI_SUCCESS) err_handler(cm,err);
printf (" -Current RDISK Size (bytes): %s", result);

err= viPrintf(cm, "DIAG:RDIS:CRE? MAX\n"); /* Maximum RDISK Size
(bytes) * /
if(err< VI_SUCCESS) err_handler(cm,err);
err= viScanf(cm, "%t", result);
if(err< VI_SUCCESS) err_handler(cm,err);
printf (" -Maximum RDISK Size (bytes): %s", result);

err= viPrintf(cm, "DIAG:DRAM:AVA?\n"); /* Remaining DRAM
Available (bytes) * /
if(err< VI_SUCCESS) err_handler(cm,err);
err= viScanf(cm, "%t", result);
if(err< VI_SUCCESS) err_handler(cm,err);

printf (" -Remaining DRAM Available: %s", result);

err= viPrintf(cm, "DIAG:DRAM:CRE?\n"); /* Current DRAM Size
(bytes)/no. drivers * /
if(err< VI_SUCCESS) err_handler(cm,err);
err= viScanf(cm, "%t", result);
if(err< VI_SUCCESS) err_handler(cm,err);
printf (" -DRAM Size (bytes)/no. drivers: %s", result);

err= viPrintf(cm, "DIAG:DRIV:LIST?\n"); /* Drivers Installed in
ROM/RAM * /
if(err< VI_SUCCESS) err_handler(cm,err);
err= viScanf(cm, "%t", result);
if(err< VI_SUCCESS) err_handler(cm,err);
printf (" -Drivers Installed (in ROM/RAM):\n    ");
position = 0;
do
{
printf ("-");
do
{
printf ("%c", result[position]);
position+ + ;
}
```

```
while ((result[position]!= ';') & (result[position]!= '\n'));
position+ + ;
printf ("\n   ");
}
while (result[position-1]!= '\n');

fflush(stdin);
printf ("\n\n\nTESTING FLASH ROM\n");
printf ("\n Step 1. Turn OFF the mainframe\n");
printf (" Step 2. Put the Run/Load Switch on the E1406A Command
Module in the LOAD
position\n");
printf (" Step 3. Turn ON the mainframe\n");
printf (" Step 4. Press ENTER to continue program execution");
getchar ();

err= viPrintf(cm, "DIAG:FROM:CRE 0\n");
if(err< VI_SUCCESS) err_handler(cm,err);

printf ("\n Step 5. Turn OFF the mainframe\n");
printf (" Step 6. Put the Run/Load Switch on the E1406A Command
Module in the RUN
position\n");
printf (" Step 7. Turn ON the mainframe\n");
printf (" Step 8. Press ENTER to continue program execution");
getchar ();

err= viPrintf(cm, "DIAG:FROM:AVA?\n"); if(err< VI_SUCCESS)
err_handler(cm,err); err= viScanf(cm, "%t", result);
if(err< VI_SUCCESS) err_handler(cm,err);
printf ("\nFlash ROM space set to 0\n\n");
printf (" -Flash ROM available:  %s", result);

err= viPrintf(cm, "DIAG:FROM:SIZE?\n"); if(err< VI_SUCCESS)
err_handler(cm,err); err= viScanf(cm, "%t", result);
if(err< VI_SUCCESS) err_handler(cm,err);
printf (" -Flash ROM size:  %s", result);

err= viPrintf(cm, "DIAG:FROM:CRE?\n"); if(err< VI_SUCCESS)
err_handler(cm,err); err= viScanf(cm, "%t", result);
if(err< VI_SUCCESS) err_handler(cm,err);
printf (" -Flash ROM created for drivers:  %s", result);

printf ("\n Step 9. Turn OFF the mainframe\n");
```

```
printf (" Step 10. Put the Run/Load Switch on the E1406A Command
Module in the LOAD
position\n");
printf (" Step 11. Turn ON the mainframe\n");
printf (" Step 12. Press ENTER to continue program execution");
getchar ();

err= viPrintf(cm, "DIAG:FROM:CRE 64\n");
if(err< VI_SUCCESS) err_handler(cm,err);

printf ("\n Step 13. Turn OFF the mainframe\n");
printf (" Step 14. Put the Run/Load Switch on the E1406A Command
Module in the RUN
position\n");
printf (" Step 15. Turn ON the mainframe\n");
printf (" Step 16. Press ENTER to continue program execution");
getchar ();

err= viPrintf(cm, "DIAG:FROM:AVA?\n"); if(err< VI_SUCCESS)
err_handler(cm,err); err= viScanf(cm, "%t", result);
if(err< VI_SUCCESS) err_handler(cm,err);
printf ("\nFlash ROM space set to maximum\n\n");
printf (" -Flash ROM available:  %s", result);

err= viPrintf(cm, "DIAG:FROM:SIZE?\n"); if(err< VI_SUCCESS)
err_handler(cm,err); err= viScanf(cm, "%t", result);
if(err< VI_SUCCESS) err_handler(cm,err);
printf (" -Flash ROM size:  %s", result);

err= viPrintf(cm, "DIAG:FROM:CRE?\n"); if(err< VI_SUCCESS)
err_handler(cm,err); err= viScanf(cm, "%t", result);
if(err< VI_SUCCESS) err_handler(cm,err);
printf (" -Flash ROM created for drivers:  %s", result);

return;
}

/* ----- TEST F-5:  Interrupt/Status Information -----* /

void interrupt_status_information (ViSession cm, ViStatus err)
{
char result[256] = { 0} ;
int i;

printf ("\nTest F-5: Interrupt/Status Information\n\n");
```

```
printf ("Interrupt Information\n\n");

for (i = 1;i < = 7;i + + ) /* Loop to find states of interrupt
lines 1-7 * /
{
err= viPrintf(cm, "DIAG:INT:SET%u?\n", i); /* Query state of
interrupt line n (n = 1-7) * /
if(err< VI_SUCCESS) err_handler(cm,err);
err= viScanf(cm, "%t", result);
if(err< VI_SUCCESS) err_handler(cm,err);
printf (" -State of interrupt line %u:  %s", i, result);
}

printf ("\nStatus Information\n\n");

err= viPrintf(cm, "STAT:OPER:COND?\n");        /* Query State of
Condition * /
if(err< VI_SUCCESS) err_handler(cm,err);       /* register * /
err= viScanf(cm, "%t", result);
if(err< VI_SUCCESS) err_handler(cm,err);
printf (" -State of Condition register:                  %s",
result);

err= viPrintf(cm, "STAT:OPER:ENAB?\n");          /* Query
Standard Operation * / if(err< VI_SUCCESS) err_handler(cm,err);
/* Enable register mask value * / err= viScanf(cm, "%t", result);
if(err< VI_SUCCESS) err_handler(cm,err);
printf (" -Standard Operation Enable register mask value:  %s",
result);

err= viPrintf(cm, "STAT:OPER:EVEN?\n");          /* Query the
value of bit set * /
if(err< VI_SUCCESS) err_handler(cm,err);       /* in Event
register * /
err= viScanf(cm, "%t", result);
if(err< VI_SUCCESS) err_handler(cm,err);
printf (" -Value of bit set in Event register:           %s",
result);

err= viPrintf(cm, "STAT:QUES:ENAB?\n");          /* Query
Questionable Status * /

if(err< VI_SUCCESS) err_handler(cm,err); /* Register enable mask
value * /
err= viScanf(cm, "%t", result);
if(err< VI_SUCCESS) err_handler(cm,err);
```

```
printf (" -Questionable Status Register enable mask value: %s",
result);

return;
}

/* ----- TEST F-6:  Triggering Information -----* /

void triggering_information (ViSession cm, ViStatus err)
{
char level[5], source[5], state[5];
int i, j;

printf ("\nTest F-6: Triggering Information\n\n");
printf (" Level Source  State\n\n");

for (i =  0;i <=  1;i ++)
{
err= viPrintf(cm, "OUTP:ECLT%u:LEV?\n", i); /* Query ECLTrg Line
0-1 logic level * /
if(err< VI_SUCCESS) err_handler(cm,err);
err= viScanf(cm, "%s", level);
if(err< VI_SUCCESS) err_handler(cm,err);
err= viPrintf(cm, "OUTP:ECLT%u:SOUR?\n", i); /* Query ECLTrg
Line 0-1 source * /
if(err< VI_SUCCESS) err_handler(cm,err);
err= viScanf(cm, "%s", source);
if(err< VI_SUCCESS) err_handler(cm,err);
err= viPrintf(cm, "OUTP:ECLT%u:STAT?\n", i); /* Query ECLTrg
Line 0-1 state * /
if(err< VI_SUCCESS) err_handler(cm,err);
err= viScanf(cm, "%s", state);
if(err< VI_SUCCESS) err_handler(cm,err);
printf (" -ECLTrg Trigger Line %u: ", i);
for (j = 0;j < strlen(level)-1;j + + )  printf ("%c", level[j]);
printf(" ");
for (j = 0;j < strlen(source)-1;j + + ) printf ("%c", source[j]);
printf(" ");
for (j = 0;j < strlen(state);j + + )  printf ("%c", state[j]);
}

printf ("\n");
for (i =  0;i <=  7;i ++)
{
```

```
err= viPrintf(cm, "OUTP:TTLT%u:LEV?\n", i); /* Query TTLTrg Line
0-7 logic level * /
if(err< VI_SUCCESS) err_handler(cm,err);
err= viScanf(cm, "%s", level);
if(err< VI_SUCCESS) err_handler(cm,err);
err= viPrintf(cm, "OUTP:TTLT%u:SOUR?\n", i); /* Query TTLTrg
Line 0-7 source * /
if(err< VI_SUCCESS) err_handler(cm,err);
err= viScanf(cm, "%s", source);
if(err< VI_SUCCESS) err_handler(cm,err);
err= viPrintf(cm, "OUTP:TTLT%u:STAT?\n", i); /* Query TTLTrg
Line 0-7 state * /
if(err< VI_SUCCESS) err_handler(cm,err);
err= viScanf(cm, "%s", state);
if(err< VI_SUCCESS) err_handler(cm,err);
printf (" -TTLTrg Trigger Line %u: ", i);
for (j = 0;j < strlen(level)-1;j + + )  printf ("%c", level[j]);
printf(" ");
for (j = 0;j < strlen(source)-1;j + + ) printf ("%c", source[j]);
printf(" ");
for (j = 0;j < strlen(state);j + + )  printf ("%c", state[j]);
}

err= viPrintf(cm, "OUTP:EXT:LEV?\n"); /* Query Trig Out port
logic level * /
if(err< VI_SUCCESS) err_handler(cm,err);
err= viScanf(cm, "%s", level);
if(err< VI_SUCCESS) err_handler(cm,err);
err= viPrintf(cm, "OUTP:EXT:SOUR?\n"); /* Query Trig Out port
source * /
if(err< VI_SUCCESS) err_handler(cm,err);
err= viScanf(cm, "%s", source);
if(err< VI_SUCCESS) err_handler(cm,err);
err= viPrintf(cm, "OUTP:EXT:STAT?\n"); /* Query Trig Out port
state * /

if(err< VI_SUCCESS) err_handler(cm,err);
err= viScanf(cm, "%s", state);
if(err< VI_SUCCESS) err_handler(cm,err);
printf ("\n -Trig Out Port ");
for (j = 0;j < strlen(level)-1;j + + )  printf ("%c", level[j]);
printf(" ");
for (j = 0;j < strlen(source)-1;j + + ) printf ("%c", source[j]);
printf(" ");
for (j = 0;j < strlen(state);j + + )  printf ("%c", state[j]);
```

```
return;
}

/* ----- TEST F-7:  Serial Port Information -----* /

void serial_port_information (ViSession cm, ViStatus err)
{
char result[256] = { 0} ;

printf ("\nTest F-7: Serial Port Information\n\n");

err= viPrintf(cm, "DIAG:COMM:SER:OWN?\n"); /* Query serial port
ownership * /
if(err< VI_SUCCESS) err_handler(cm,err);
err= viScanf(cm, "%t", result);
if(err< VI_SUCCESS) err_handler(cm,err);
printf (" -Serial port ownership: %s", result);

err= viPrintf(cm, "SYST:COMM:SER:BAUD?\n"); /* Query baud rate *
/
if(err< VI_SUCCESS) err_handler(cm,err);
err= viScanf(cm, "%t", result);
if(err< VI_SUCCESS) err_handler(cm,err);
printf (" -Transmit/receive baud rate: %s", result);

err= viPrintf(cm, "SYST:COMM:SER:CONT:DTR?\n"); /* Query DTR
mode line * /
if(err< VI_SUCCESS) err_handler(cm,err);
err= viScanf(cm, "%t", result);
if(err< VI_SUCCESS) err_handler(cm,err);
printf (" -Current mode of DTR line: %s", result);

err= viPrintf(cm, "SYST:COMM:SER:CONT:RTS?\n"); /* Query RTS
mode line * /
if(err< VI_SUCCESS) err_handler(cm,err);
err= viScanf(cm, "%t", result);
if(err< VI_SUCCESS) err_handler(cm,err);
printf (" -Current mode of RTS line: %s\n", result);

err= viPrintf(cm, "SYST:COMM:SER:BITS?\n"); /* Query bits
setting * /
if(err< VI_SUCCESS) err_handler(cm,err);
err= viScanf(cm, "%t", result);
if(err< VI_SUCCESS) err_handler(cm,err);
```

```
printf (" -Current bits setting: %s", result);

err= viPrintf(cm, "SYST:COMM:SER:SBIT?\n"); /* Query number of
stop bits * /
if(err< VI_SUCCESS) err_handler(cm,err);
err= viScanf(cm, "%t", result);
if(err< VI_SUCCESS) err_handler(cm,err);
printf (" -Number of stop bits set: %s", result);

err= viPrintf(cm, "SYST:COMM:SER:PACE:THR:STAR?\n");  /* Query
STARt threshold level * /
if(err< VI_SUCCESS) err_handler(cm,err);
err= viScanf(cm, "%t", result);
if(err< VI_SUCCESS) err_handler(cm,err);
printf (" -STARt threshold level: %s", result);

err= viPrintf(cm, "SYST:COMM:SER:PACE:THR:STOP?\n");  /* Query
STOP threshold level * /
if(err< VI_SUCCESS) err_handler(cm,err);
err= viScanf(cm, "%t", result);
if(err< VI_SUCCESS) err_handler(cm,err);
printf (" -STOP threshold level: %s\n", result);

err= viPrintf(cm, "SYST:COMM:SER:PAR:CHEC?\n"); /* Query receive
parity check state * /
if(err< VI_SUCCESS) err_handler(cm,err);
err= viScanf(cm, "%t", result);

if(err< VI_SUCCESS) err_handler(cm,err);
printf (" -Receive parity check state: %s", result);

err= viPrintf(cm, "SYST:COMM:SER:PAR?\n"); /* Query current
parity type checking * /
if(err< VI_SUCCESS) err_handler(cm,err);
err= viScanf(cm, "%t", result);
if(err< VI_SUCCESS) err_handler(cm,err);
printf (" -Current parity type checking: %s", result);

err= viPrintf(cm, "SYST:COMM:SER:TRAN:AUTO?\n"); /* Query
transmit/receive protocol * /
if(err< VI_SUCCESS) err_handler(cm,err);
err= viScanf(cm, "%t", result);
if(err< VI_SUCCESS) err_handler(cm,err);
printf (" -Transmit/receive pacing linkage: %s", result);
```

```
err= viPrintf(cm, "SYST:COMM:SER:PACE:PROT?\n"); /* Query
receive pacing protocol * /
if(err< VI_SUCCESS) err_handler(cm,err);
err= viScanf(cm, "%t", result);
if(err< VI_SUCCESS) err_handler(cm,err);
printf (" -Receive pacing protocol state: %s", result);

err= viPrintf(cm, "SYST:COMM:SER:TRAN:PACE:PROT?\n");/* Query
transmit pacing protocol* /
if(err< VI_SUCCESS) err_handler(cm,err);
err= viScanf(cm, "%t", result);
if(err< VI_SUCCESS) err_handler(cm,err);
printf (" -Transmit pacing protocol state: %s\n\n", result);

fflush(stdin);
printf ("Press ENTER to continue ");
getchar ();

return;
}

/* ----- Error Handling Function -----* /

void err_handler (ViSession cm, ViStatus err)
{
char buf[1024] = { 0} ;

viStatusDesc (cm, err, buf); printf ("\nERROR = %s\n", buf);
return;
}
```

This information is subject to change without notice.
© Keysight Technologies, 2019
Printed in Malaysia
Edition 3, July 2019
E1406-90011
www.keysight.com