# GPIB

## Getting Started with Your GPIB-1284CT and the NI-488.2™ Software for DOS

NATIONAL INSTRUMENTS™

November 1999 Edition
Part Number 370896A-01

**Worldwide Technical Support and Product Information**

www.ni.com

**National Instruments Corporate Headquarters**

11500 North Mopac Expressway  Austin, Texas 78759-3504  USA  Tel: 512 794 0100

**Worldwide Offices**

Australia 03 9879 5166, Austria 0662 45 79 90 0, Belgium 02 757 00 20, Brazil 011 284 5011, Canada (Calgary) 403 274 9391, Canada (Ontario) 905 785 0085, Canada (Québec) 514 694 8521, China 0755 3904939, Denmark 45 76 26 00, Finland 09 725 725 11, France 01 48 14 24 24, Germany 089 741 31 30, Greece 30 1 42 96 427, Hong Kong 2645 3186, India 91805275406, Israel 03 6120092, Italy 02 413091, Japan 03 5472 2970, Korea 02 596 7456, Mexico (D.F.) 5 280 7625, Mexico (Monterrey) 8 357 7695, Netherlands 0348 433466, Norway 32 27 73 00, Poland 48 22 528 94 06, Portugal 351 1 726 9011, Singapore 2265886, Spain 91 640 0085, Sweden 08 587 895 00, Switzerland 056 200 51 51, Taiwan 02 2377 1200, United Kingdom 01635 523545

For further support information, see the *Technical Support Resources* appendix. To comment on the documentation, send e-mail to techpubs@ni.com

# Important Information

## Warranty

The GPIB-1284CT is warranted against defects in materials and workmanship for a period of two years from the date of shipment, as evidenced by receipts or other documentation. National Instruments will, at its option, repair or replace equipment that proves to be defective during the warranty period. This warranty includes parts and labor.

The media on which you receive National Instruments software are warranted not to fail to execute programming instructions, due to defects in materials and workmanship, for a period of 90 days from date of shipment, as evidenced by receipts or other documentation. National Instruments will, at its option, repair or replace software media that do not execute programming instructions if National Instruments receives notice of such defects during the warranty period. National Instruments does not warrant that the operation of the software shall be uninterrupted or error free.

A Return Material Authorization (RMA) number must be obtained from the factory and clearly marked on the outside of the package before any equipment will be accepted for warranty work. National Instruments will pay the shipping costs of returning to the owner parts which are covered by warranty.

National Instruments believes that the information in this document is accurate. The document has been carefully reviewed for technical accuracy. In the event that technical or typographical errors exist, National Instruments reserves the right to make changes to subsequent editions of this document without prior notice to holders of this edition. The reader should consult National Instruments if errors are suspected. In no event shall National Instruments be liable for any damages arising out of or related to this document or the information contained in it.

EXCEPT AS SPECIFIED HEREIN, NATIONAL INSTRUMENTS MAKES NO WARRANTIES, EXPRESS OR IMPLIED, AND SPECIFICALLY DISCLAIMS ANY WARRANTY OF MERCHANTABILITY OR FITNESS FOR A PARTICULAR PURPOSE. CUSTOMER'S RIGHT TO RECOVER DAMAGES CAUSED BY FAULT OR NEGLIGENCE ON THE PART OF NATIONAL INSTRUMENTS SHALL BE LIMITED TO THE AMOUNT THERETOFORE PAID BY THE CUSTOMER. NATIONAL INSTRUMENTS WILL NOT BE LIABLE FOR DAMAGES RESULTING FROM LOSS OF DATA, PROFITS, USE OF PRODUCTS, OR INCIDENTAL OR CONSEQUENTIAL DAMAGES, EVEN IF ADVISED OF THE POSSIBILITY THEREOF. This limitation of the liability of National Instruments will apply regardless of the form of action, whether in contract or tort, including negligence. Any action against National Instruments must be brought within one year after the cause of action accrues. National Instruments shall not be liable for any delay in performance due to causes beyond its reasonable control. The warranty provided herein does not cover damages, defects, malfunctions, or service failures caused by owner's failure to follow the National Instruments installation, operation, or maintenance instructions; owner's modification of the product; owner's abuse, misuse, or negligent acts; and power failure or surges, fire, flood, accident, actions of third parties, or other events outside reasonable control.

## Copyright



## Trademarks

National Instruments™, NI-488™, NI-488.2™, and ni.com™ are trademarks of National Instruments Corporation.

Product and company names mentioned herein are trademarks or trade names of their respective companies.

## WARNING REGARDING USE OF NATIONAL INSTRUMENTS PRODUCTS

(1) NATIONAL INSTRUMENTS PRODUCTS ARE NOT DESIGNED WITH COMPONENTS AND TESTING FOR A LEVEL OF RELIABILITY SUITABLE FOR USE IN OR IN CONNECTION WITH SURGICAL IMPLANTS OR AS CRITICAL COMPONENTS IN ANY LIFE SUPPORT SYSTEMS WHOSE FAILURE TO PERFORM CAN REASONABLY BE EXPECTED TO CAUSE SIGNIFICANT INJURY TO A HUMAN.

(2) IN ANY APPLICATION, INCLUDING THE ABOVE, RELIABILITY OF OPERATION OF THE SOFTWARE PRODUCTS CAN BE IMPAIRED BY ADVERSE FACTORS, INCLUDING BUT NOT LIMITED TO FLUCTUATIONS IN ELECTRICAL POWER SUPPLY, COMPUTER HARDWARE MALFUNCTIONS, COMPUTER OPERATING SYSTEM SOFTWARE FITNESS, FITNESS OF COMPILERS AND DEVELOPMENT SOFTWARE USED TO DEVELOP AN APPLICATION, INSTALLATION ERRORS, SOFTWARE AND HARDWARE COMPATIBILITY PROBLEMS, MALFUNCTIONS OR FAILURES OF ELECTRONIC MONITORING OR CONTROL DEVICES, TRANSIENT FAILURES OF ELECTRONIC SYSTEMS (HARDWARE AND/OR SOFTWARE), UNANTICIPATED USES OR MISUSES, OR ERRORS ON THE PART OF THE USER OR APPLICATIONS DESIGNER (ADVERSE FACTORS SUCH AS THESE ARE HEREAFTER COLLECTIVELY TERMED "SYSTEM FAILURES"). ANY APPLICATION WHERE A SYSTEM FAILURE WOULD CREATE A RISK OF HARM TO PROPERTY OR PERSONS (INCLUDING THE RISK OF BODILY INJURY AND DEATH) SHOULD NOT BE RELIANT SOLELY UPON ONE FORM OF ELECTRONIC SYSTEM DUE TO THE RISK OF SYSTEM FAILURE. TO AVOID DAMAGE, INJURY, OR DEATH, THE USER OR APPLICATION DESIGNER MUST TAKE REASONABLY PRUDENT STEPS TO PROTECT AGAINST SYSTEM FAILURES, INCLUDING BUT NOT LIMITED TO BACK-UP OR SHUT DOWN MECHANISMS. BECAUSE EACH END-USER SYSTEM IS CUSTOMIZED AND DIFFERS FROM NATIONAL INSTRUMENTS' TESTING PLATFORMS AND BECAUSE A USER OR APPLICATION DESIGNER MAY USE NATIONAL INSTRUMENTS PRODUCTS IN COMBINATION WITH OTHER PRODUCTS IN A MANNER NOT EVALUATED OR CONTEMPLATED BY NATIONAL INSTRUMENTS, THE USER OR APPLICATION DESIGNER IS ULTIMATELY RESPONSIBLE FOR VERIFYING AND VALIDATING THE SUITABILITY OF NATIONAL INSTRUMENTS PRODUCTS WHENEVER NATIONAL INSTRUMENTS PRODUCTS ARE INCORPORATED IN A SYSTEM OR APPLICATION, INCLUDING, WITHOUT LIMITATION, THE APPROPRIATE DESIGN, PROCESS AND SAFETY LEVEL OF SUCH SYSTEM OR APPLICATION.

# Compliance

## FCC/Canada Radio Frequency Interference Compliance*

### Determining FCC Class

The Federal Communications Commission (FCC) has rules to protect wireless communications from interference. The FCC places digital electronics into two classes. These classes are known as Class A (for use in industrial-commercial locations only) or Class B (for use in residential or commercial locations). Depending on where it is operated, this product could be subject to restrictions in the FCC rules. (In Canada, the Department of Communications (DOC), of Industry Canada, regulates wireless interference in much the same way.)

Digital electronics emit weak signals during normal operation that can affect radio, television, or other wireless products. By examining the product you purchased, you can determine the FCC Class and therefore which of the two FCC/DOC Warnings apply in the following sections. (Some products may not be labelled at all for FCC, if so the reader should then assume these are Class A devices.)

FCC Class A products only display a simple warning statement of one paragraph in length regarding interference and undesired operation. Most of our products are FCC Class A. The FCC rules have restrictions regarding the locations where FCC Class A products can be operated.

FCC Class B products display either a FCC ID code, starting with the letters **EXN**, or the FCC Class B compliance mark that appears as shown here on the right.


The curious reader can consult the FCC web site `http://www.fcc.gov` for more information.

### FCC/DOC Warnings

This equipment generates and uses radio frequency energy and, if not installed and used in strict accordance with the instructions in this manual and the CE Mark Declaration of Conformity**, may cause interference to radio and television reception. Classification requirements are the same for the Federal Communications Commission (FCC) and the Canadian Department of Communications (DOC).

Changes or modifications not expressly approved by National Instruments could void the user's authority to operate the equipment under the FCC Rules.

### Class A

#### Federal Communications Commission

This equipment has been tested and found to comply with the limits for a Class A digital device, pursuant to part 15 of the FCC Rules. These limits are designed to provide reasonable protection against harmful interference when the equipment is operated in a commercial environment. This equipment generates, uses, and can radiate radio frequency energy and, if not installed and used in accordance with the instruction manual, may cause harmful interference to radio communications. Operation of this equipment in a residential area is likely to cause harmful interference in which case the user will be required to correct the interference at his own expense.

#### Canadian Department of Communications

This Class A digital apparatus meets all requirements of the Canadian Interference-Causing Equipment Regulations.

Cet appareil numérique de la classe A respecte toutes les exigences du Règlement sur le matériel brouilleur du Canada.

### Class B

#### Federal Communications Commission

This equipment has been tested and found to comply with the limits for a Class B digital device, pursuant to part 15 of the FCC Rules. These limits are designed to provide reasonable protection against harmful interference in a residential installation. This equipment generates, uses and can radiate radio frequency energy and, if not installed and used in accordance with the instructions, may cause harmful interference to radio communications. However, there is no guarantee that interference will not occur in a particular installation. If this equipment does cause harmful

interference to radio or television reception, which can be determined by turning the equipment off and on, the user is encouraged to try to correct the interference by one or more of the following measures:

- Reorient or relocate the receiving antenna.
- Increase the separation between the equipment and receiver.
- Connect the equipment into an outlet on a circuit different from that to which the receiver is connected.
- Consult the dealer or an experienced radio/TV technician for help.

### Canadian Department of Communications

This Class B digital apparatus meets all requirements of the Canadian Interference-Causing Equipment Regulations.

Cet appareil numérique de la classe B respecte toutes les exigences du Règlement sur le matériel brouilleur du Canada.

## European Union - Compliance to EEC Directives

Readers in the EU/EEC/EEA must refer to the Manufacturer's Declaration of Conformity (DoC) for information** pertaining to the CE Mark compliance scheme. The Manufacturer includes a DoC for most every hardware product except for those bought for OEMs, if also available from an original manufacturer that also markets in the EU, or where compliance is not required as for electrically benign apparatus or cables.

* Certain exemptions may apply in the USA, see FCC Rules §15.103 **Exempted devices**, and §15.105(c). Also available in sections of CFR 47.

** The CE Mark Declaration of Conformity will contain important supplementary information and instructions for the user or installer.

# Contents

## Chapter 5
## Begin to Use the NI-488.2 Software



## Appendix A
## Specifications

## Appendix B
## Updating Your Firmware

## Appendix C
## Technical Support Resources

## Glossary

## Figure



## Table

# About This Manual

This manual contains instructions for installing and configuring the National Instruments GPIB-1284CT parallel-to-GPIB Controller and NI-488.2 software for DOS. This manual assumes that you are already familiar with DOS.

## Conventions

The following conventions appear in this manual:

This icon denotes a note, which alerts you to important information.

This icon denotes a caution, which advises you of precautions to take to avoid injury, data loss, or a system crash.

This icon denotes a warning, which advises you of precautions to take to avoid being electrically shocked.

**bold**

Bold text denotes items that you must select or click on in the software, such as menu items and dialog box options. Bold text also denotes parameter names.

IEEE 488 and IEEE 488.2

*IEEE 488* and *IEEE 488.2* refer to the ANSI/IEEE Standard 488.1-1987 and ANSI/IEEE Standard 488.2-1987, respectively, which define the GPIB.

*italic*

Italic text denotes variables, emphasis, a cross reference, or an introduction to a key concept. This font also denotes text that is a placeholder for a word or value that you must supply.

`monospace`

Text in this font denotes text or characters that you should enter from the keyboard, sections of code, programming examples, and syntax examples. This font is also used for the proper names of disk drives, paths, directories, programs, subprograms, subroutines, device names, functions, operations, variables, filenames and extensions, and code excerpts.

**`monospace bold`**

Bold text in this font denotes the messages and responses that the computer automatically prints to the screen. This font also emphasizes lines of code that are different from the other examples.

*`monospace italic`*

Italic text in this font denotes text that is a placeholder for a word or value that you must supply.

# Related Documentation

The following documents contain information that you might find helpful as you read this manual:

- ANSI/IEEE Standard 488.1-1987, *IEEE Standard Digital Interface for Programmable Instrumentation*
- ANSI/IEEE Standard 488.2-1992, *IEEE Standard Codes, Formats, Protocols, and Common Commands*
- ANSI/IEEE Standard 1284-1994, *IEEE Standard Signaling Method for a Bidirectional Parallel Peripheral Interface for Personal Computers*
- *Microsoft MS-DOS User's Guide*, Microsoft Corporation

# 1

# Introduction

This chapter lists what you need to get started and optional equipment you can order, and briefly describes the GPIB-1284CT hardware and the NI-488.2 software for DOS.

## What You Need to Get Started

Before you install your GPIB hardware and the NI-488.2 software for DOS, make sure you have all of the following items:

- ❑ MS-DOS 3.3 or higher, or equivalent installed on your computer
- ❑ 3.5 or 5.25 in. *NI-488.2 Software for DOS*, *Distribution Disk for the GPIB-1284CT*, which is included in your kit
- ❑ One of the following boxes, which is included in your kit:
  - GPIB-1284CT AC version (100–120 VAC)
  - GPIB-1284CT AC version (220–240 VAC)
  - GPIB-1284CT DC version
- ❑ If you have the GPIB-1284CT AC version, one of the following power cords:
  - U.S. standard power cord
  - Swiss power cord
  - Australian power cord
  - Universal European power cord
  - North American power cord
  - U.K. power cord
- ❑ If you have the GPIB-1284CT DC version, one of the following:
  - 9 V wall-mount power supply (100–120 VAC)
  - 9 V wall-mount power supply (220–240 VAC)
  - External keyboard connector DC power cable

- ❑ One of the following shielded GPIB cables, which you can purchase from National Instruments:
  - Type X1 single-shielded cables (1, 2, or 4 m)
  - Type X2 double-shielded cables (1, 2, or 4 m)

**Caution** To meet FCC emission limits for this device, you must use a shielded (Type X1 or X2) GPIB cable. If you operate this equipment with a non-shielded cable, it may interfere with radio and television reception.

- ❑ Parallel cables, which you can purchase from National Instruments

# Optional Equipment

For information about ordering the following optional equipment, contact National Instruments:

- Parallel cables:
  - 25-pin D-Sub to 25-pin D-Sub (1 or 2 m)
- GPIB bus extenders:
  - GPIB-130
  - GPIB-140A

# GPIB-1284CT Hardware Overview

The GPIB-1284CT is a high-performance parallel-to-GPIB interface. Using a GPIB-1284CT, any PC AT compatible computer with a parallel port can become a Controller, Talker, or Listener on the GPIB. The GPIB-1284CT has all the logic required to implement the physical and electrical specifications of ANSI/IEEE Standard 488.1-1987 and ANSI/IEEE Standard P1284. The GPIB-1284CT conforms to all versions of the IEEE 488 standard, including ANSI/IEEE Standard 488.2-1992. The TNT4882C Controller chip implements all IEEE 488 Talker/Listener/Controller functionality.

The GPIB-1284CT has two parallel ports: one for connecting to the host computer and another for transparent pass-through connection to other parallel port devices. Communication from the computer through the pass-through port of the GPIB-1284CT to another parallel port device can be unidirectional only. When the GPIB-1284CT is initially powered on, it is in pass-through mode; all parallel port activity from the host computer is routed to the pass-through parallel port. The NI-488.2 driver switches the

GPIB-1284CT into GPIB mode when a device or board is put online. If another application initiates a print through the parallel port to which the GPIB-1284CT is connected, the driver transparently switches the GPIB-1284CT to pass-through mode for the duration of the print.

The parallel-to-GPIB conversion circuitry is implemented in a field-programmable gate array, which you can reconfigure with the `ctupdate` utility. Refer to Appendix B, *Updating Your Firmware*, for more information. As parallel port standards evolve, National Instruments will provide updates to keep your hardware and software up-to-date.

## Top Panel

Figure 1-1 shows the top panel of the GPIB-1284CT.

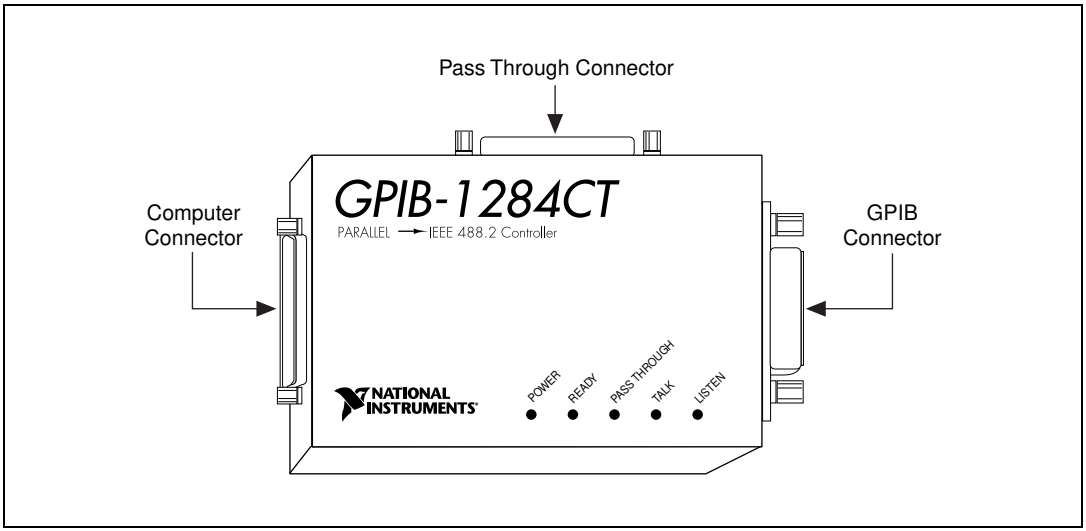


**Figure 1-1.** GPIB-1284CT Top Panel

Table 1-1 describes the LEDs (light-emitting diodes) on the GPIB-1284CT top panel.

**Table 1-1.** GPIB-1284CT Top Panel LEDs

| LED | Description |
|---|---|
| **POWER** | Indicates that power is supplied. |
| **READY** | Indicates that the NI-488.2 software has found the GPIB-1284CT and is ready to communicate with it. |

**Table 1-1.** GPIB-1284CT Top Panel LEDs (Continued)

| LED | Description |
|---|---|
| **PASS THROUGH** | Indicates that the GPIB-1284CT is in pass-through mode. All parallel port activity is transferred to the pass-through parallel port connector. The GPIB-1284CT powers up in this mode. |
| **TALK** | Indicates that the GPIB-1284CT is configured as a GPIB Talker. |
| **LISTEN** | Indicates that the GPIB-1284CT is configured as a GPIB Listener. |

## I/O Connectors

Connect the parallel port labeled COMPUTER on the GPIB-1284CT to a parallel port on your computer using a shielded parallel (printer) cable that is two meters or less in length. You can connect the GPIB-1284CT to a standard AT-style unidirectional parallel port, a PS/2 style bidirectional parallel port, or an Enhanced Parallel Port (EPP). Refer to the documentation that came with your computer to determine if you can configure the parallel port on your computer for different parallel port types. If you need parallel cables, you can order them from National Instruments.

Connect the GPIB connector to your GPIB instruments. If you need single-shielded or double-shielded GPIB cables, you can order them from National Instruments. You can connect the GPIB-1284CT to as many as 14 GPIB instruments. If you need to connect more than 14 instruments, you can order a GPIB extender or expander from National Instruments.

If you have an additional unidirectional parallel port device (for example, a printer) that is accessed by standard printing services, connect it to the parallel port labeled PASS THROUGH on the GPIB-1284CT. The NI-488.2 software handles the multiplexing between the PASS THROUGH port and the GPIB port.

# NI-488.2 Software Overview

The NI-488.2 software for DOS consists of a DOS device driver and utilities that enable a PC AT compatible computer to act as a GPIB Controller with complete communications and bus management support.

The NI-488.2 driver is a memory-resident program that DOS loads whenever you start your system. The NI-488.2 driver supports up to three GPIB-1284CT boxes connected to three separate parallel ports, and requires approximately 50 KB of memory.

The NI-488.2 software includes the following components:

- Device driver
- Hardware and software diagnostic utilities
- Configuration utility
- Interactive control utility
- Software development utilities
- Language interface libraries for BASICA, Microsoft QuickBASIC, Microsoft Professional BASIC/Microsoft Visual Basic for DOS, and Microsoft C
- Example programs that use NI-488 functions and NI-488.2 routines

For a detailed list of files, refer to the *NI-488.2 User Manual for DOS*.

# 2

# Install Your Hardware

This chapter contains instructions for connecting your GPIB-1284CT to your computer.

## Step 1. Verify the Voltage Requirement

Make sure that the voltage marked on your GPIB-1284CT or on the power supply matches the voltage that is supplied in your area.

**Caution** Do *not* operate your GPIB-1284CT at any voltage other than the one marked on your GPIB-1284CT or on the power supply. Doing so could damage the unit. Replacement fuses for the AC version must be the proper type and size. For fuse specifications, refer to Appendix A, *Specifications*.

## Step 2. Connect the Cables

To connect the cables to your GPIB-1284CT, complete the following steps:

1. Connect the parallel cable, as follows:
   a. Make sure that the parallel cable is shielded and 2 m or less in length.
   b. Connect the cable to your GPIB-1284CT 25-pin D-Sub connector labeled **COMPUTER**.
   c. Securely fasten the holding screws.
   d. Connect the other end of the cable to the parallel port on your computer.
2. Connect the GPIB cable, as follows:
   a. Make sure that the GPIB cable is shielded and follows all IEEE 488 cabling restrictions.
   b. Connect the cable to your GPIB-1284CT 24-pin Champ connector labeled **GPIB**.
   c. Tighten the thumb screws.
   d. Connect the other end of the cable to your GPIB device(s).

3. (Optional) Connect an additional unidirectional parallel device, such as a printer, to your GPIB-1284CT, as follows:
   a. Make sure that the parallel cable is shielded.
   b. Connect the parallel port cable to the 25-pin D-Sub connector labeled **PASS THROUGH**.
   c. Securely fasten the holding screws.
   d. Connect the other end of the cable to your parallel device.

# Step 3. Connect the Power Supply

Connect the power supply, as follows:

- **AC Version**—Connect the power cord to the power receptacle on your GPIB-1284CT. Then, plug the power cord into an AC outlet of the correct voltage.
- **DC Version**—You can obtain power from the wall-mount power supply or from an external keyboard connector, which is available on most laptop computers:
  – **Wall-Mount Supply**—Connect the power jack to your GPIB-1284CT. Then, plug the supply into an AC outlet of the correct voltage.
  – **External Keyboard Connector**—Connect the power jack end of the keyboard connector DC power cable to your GPIB-1284CT. Then, plug the other end into the external keyboard connector on your computer.

# Step 4. Switch on the GPIB-1284CT

If you have an AC version, use the rocker switch to power on your GPIB-1284CT. If you have a DC version, use the slide switch to power on your GPIB-1284CT.

The **POWER** LED comes on immediately. The **PASS THROUGH** LED also comes on, indicating that your GPIB-1284CT is in pass-through mode. The **READY** LED does not come on until the NI-488.2 driver successfully finds your GPIB-1284CT.

# 3

# Install and Configure the Software

This chapter describes how to install and configure the NI-488.2 software.

## Install the NI-488.2 Software

After you install your GPIB-1284CT hardware, complete the following steps to install the NI-488.2 software:

1. Insert the NI-488.2 distribution disk into an unused drive.
2. Type the following command:

   `x:\install`

   where *x* is the letter of the drive containing the disk (usually `a` or `b`).

3. Select the type of installation you want.
   - Selecting `Full GPIB Installation` installs all NI-488.2 software files on your hard drive.
   - Selecting `Custom GPIB Installation` lets you select the parts of the NI-488.2 software to install on your hard drive.
   - Selecting `Hardware Diagnostics` executes the hardware diagnostic program `ibdiag`. If the hardware diagnostics fail, refer to Chapter 4, *Verify Your Installation*, for information on `ibdiag`.
   - Selecting `Exit Install` or pressing the <Esc> key at any time causes you to exit the installation program and returns you to the DOS prompt.
4. After the installation is complete, restart your computer.

   To load the NI-488.2 driver for DOS, you must restart your computer. If the installation is successful, the driver displays a banner message on your screen when DOS loads the driver.

After you install the NI-488.2 software, you can run `wibconf` to view or change the NI-488.2 driver configuration. If you installed more than one GPIB-1284CT, or if your single GPIB-1284CT is not connected to `lpt1`, you must configure the NI-488.2 software with `wibconf`. To run `wibconf`,

refer to the *Configure the NI-488.2 Software* section later in this chapter. If you want to attach both a printer and a GPIB-1284CT to the same parallel port, refer to the next section, *Use Pass-Through Printing*.

Otherwise, skip to Chapter 4, *Verify Your Installation*.

# Use Pass-Through Printing

When the GPIB-1284CT is powered on, it is in pass-through mode, as indicated by the **PASS THROUGH** LED. All data sent to the parallel port to which you have connected the GPIB-1284CT passes from the parallel port labeled COMPUTER to the parallel port labeled PASS THROUGH.

When the NI-488.2 software places the GPIB-1284CT online, the GPIB-1284CT is taken out of pass-through mode. If another application tries to print, the NI-488.2 software handles the multiplexing between the GPIB application and the print job. When the GPIB-1284CT is taken offline, it is placed back into pass-through mode.

# Configure the NI-488.2 Software

You can use `wibconf` to view or change the configuration of the NI-488.2 driver. If you installed more than one GPIB-1284CT, or if your single GPIB-1284CT is not connected to `lpt1`, you must configure the NI-488.2 software with `wibconf`.

To run `wibconf`, complete the following steps:

1. Navigate to the directory where the NI-488.2 software is installed, and type the following command:

   ```
   ibconf
   ```

2. Use the cursor keys to select different fields and view corresponding help information.
3. Make any necessary changes.

   Notice that the `Type of parallel port` field in `ibconf` is set to `AUTO` by default. When the field is set to `AUTO`, the NI-488.2 software attempts to determine the type of the corresponding parallel port automatically. If you know the type of your parallel port, set the `Type of parallel port` field to the correct type (`UNIDIR`, `BIDIR`, or `EPP`). All parallel port types support the unidirectional protocol, so it is always safe to select `UNIDIR`, the unidirectional protocol.

**Note** All PS/2 computers have bidirectional parallel ports. If you have a PS/2 computer, set the `Type of parallel port` field in `ibconf` to `BIDIR`.

**Note** The NI-488.2 software is unable to safely detect an EPP parallel port at I/O address 0x3BC. For this reason, if the parallel port is at I/O address 0x3BC and the `Type of parallel port` field is set to `AUTO`, the driver treats the port as a unidirectional port.

4. Exit `ibconf` by pressing <Esc> or the function key <F9>, and save your changes.
5. Restart your computer.

For more information about `ibconf`, refer to the *NI-488.2 User Manual for DOS*.

After you install and configure the software, continue to Chapter 4, *Verify Your Installation*.

# 4

# Verify Your Installation

This chapter describes how to verify your hardware and software installation and troubleshoot problems, and answers some common questions.

## Verify Your Hardware Installation

To verify your hardware installation, run the `ibdiag` utility, as follows:

1. If a parallel cable is connected to the pass-through port, disconnect it.
2. Navigate to the directory where the software is installed (for example, `c:\1284ct`).
3. Type the following command:

   ```
   ibdiag
   ```

If `ibdiag` completes with no errors, your hardware is functioning properly. If `ibdiag` returns an error message, refer to the next section for troubleshooting instructions.

### Troubleshooting ibdiag Error Messages

**Warning** The GPIB-1284CT contains circuitry that operates with hazardous voltages. Refer service requirements to qualified personnel.

If `ibdiag` returns an error message, do the following:

- Verify that the GPIB-1284CT is connected to the parallel port you have selected in `ibdiag`.
- Verify that a parallel cable is not connected to the pass-through parallel port.

- Verify that the correct LEDs are lit. The GPIB-1284CT should power on with the **POWER** and **PASS THROUGH** LEDs lit.

  If the **POWER** LED is not lit, check the following items:

  – Check that the power switch is in the ON position.

  – Check that the power cable is securely plugged into the power outlet.

  – If you have an AC version, check the power cord connection and the fuse.

**Warning** For continued protection against fire, replace the fuse only with the same type and rating of fuse. See Appendix A, *Specifications*, for fuse specifications.

  – If you have a DC version, check the connection to the power supply.

  If the **PASS THROUGH** LED does not come on when the GPIB-1284CT is powered on, contact National Instruments.

- Make sure that when you run `ibdiag`, you enter the correct parallel port information for the parallel port to which the GPIB-1284CT is connected. You must enter the name of the parallel port (for example, `lpt1`), its type (unidirectional, bidirectional, or EPP), and its interrupt level. Refer to the documentation that came with your computer to determine what type of parallel port you have and how it can be configured.

  If you do not know what type of parallel port you have, choose unidirectional to run `ibdiag`. Unidirectional communication works properly on all types of parallel ports. You can use `ibdiag` to determine whether your parallel port is capable of either bidirectional or EPP communication.

  If you do not know the interrupt level of your parallel port, choose `No Interrupt` when you run `ibdiag`. Typically, interrupt level 7 is associated with `lpt1` and interrupt level 5 is associated with `lpt2`. You can use `ibdiag` to determine whether you can use interrupts with your parallel port.

- Check the parallel port cable connection. The cable should be no longer than 2 m, and should be a shielded parallel cable. If you suspect cable problems, you can order a parallel cable from National Instruments. See the *Optional Equipment* section of Chapter 1, *Introduction*, for specific information on parallel cables you can order.

# Verify Your Software Installation

To verify your software installation, run the `ibtest` utility, as follows:

1. Disconnect any GPIB cables.
2. Navigate to the directory where the software is installed (for example, `c:\1284ct`).
3. Type the following command:

   ```
   ibtest
   ```

If `ibtest` completes with no errors, you have installed the NI-488.2 software correctly. If `ibtest` returns an error message, refer to the next section for troubleshooting instructions.

## Troubleshooting ibtest Error Messages

If an error occurs when you run `ibtest`, check the following:

- The GPIB-1284CT should *not* be connected to a GPIB device.
- The GPIB-1284CT must be powered on.
- The **READY** LED should be on. If it is not, the NI-488.2 software has not accessed the GPIB-1284CT. Either the software is not installed or configured properly, or the cable connection between the computer and the GPIB-1284CT is not secure.
- The `config.sys` file on your startup disk should contain the following line:

  `device=`*`drive`*`:\`*`path`*`\gpib.com`

  where *`drive`* is the disk drive where the NI-488.2 software is installed (usually `c`) and *`path`* is the path of the directory in which you have installed the NI-488.2 software (for example, `1284ct`).
- You should have restarted your computer after installing and configuring the NI-488.2 software.
- Verify that the GPIB-1284CT passes `ibdiag` successfully.
- Verify that the NI-488.2 software is configured correctly by running `ibconf`. Specifically, verify that the `Use this GPIB interface`, `Parallel port number`, `Type of parallel port`, and `Interrupt Level` fields are all set properly.

- Verify that the `Type of parallel port` field in `ibconf` is set correctly. Leave this field set to `AUTO` only if you do not know the type of parallel port you have; otherwise, select the correct type. The documentation that came with your computer should specify the type of your parallel port.
- Check the parallel port cable connection. The cable should be no longer than 2 m, and should be a shielded parallel cable. If you suspect cable problems, you can order a parallel cable from National Instruments. See the *Optional Equipment* section of Chapter 1, *Introduction*, for specific information on parallel cables you can order.

If you have performed these steps and `ibtest` still fails, refer to the following sections to check the hardware and software.

**Note** In the following paragraphs, `gpibx` refers to `gpib0`, `gpib1`, `gpib2`, or `gpib3` as appropriate.

## Presence Test of Driver

The `ibtest` program tests for the presence of the NI-488.2 driver and displays the following message if it detects a problem:

```
<<< No driver present for GPIBx. >>>
```

If this message appears, make sure that the GPIB driver is installed. Check that the following line is in your `config.sys` file:

device=*drive*:*path*\gpib.com

where *drive* is the disk drive where the NI-488.2 software is installed (usually `c`) and path is the *path* of the directory in which you have installed the NI-488.2 software (for example, `1284ct`).

## Presence Test of GPIB-1284CT

The following error message appears if the GPIB-1284CT is not installed or if the software is not configured properly:

```
<<< No board present for GPIBx. >>>
```

If this message appears, you could have one of the following situations:

- The `Use this GPIB interface` field in `ibconf` might be set to `No` for `gpibx`. If you want to use the GPIB-1284CT, you must set this field to `Yes`.
- The GPIB-1284CT might not be properly installed. Refer to Chapter 2, *Install Your Hardware*, for detailed instructions.
- The software settings do not match the parallel port hardware settings. You can run `ibconf` to check the current configuration of the software.

### GPIB Cables Connected

The following error message appears if a GPIB cable is connected to the GPIB-1284CT when you run `ibtest`:

```
Call(25) 'ibcmd " "' failed, ibsta (0x134) not what was
expected (0x8130)
```

```
Call(25) 'ibcmd " "' failed, expected ibsta (0x100) to
have the ERR bit set.
```

Disconnect all GPIB cables before trying the test again.

## Common Questions

**Which NI-488.2 software (DOS or Windows) do I need to install?**

If you want to run a GPIB application under DOS, install the NI-488.2 software for DOS. If you want to run a GPIB application in Windows, you must install the NI-488.2 software for Windows.

**Can I have the DOS and Windows drivers for NI-488.2 installed at the same time?**

Yes, there is nothing wrong with installing both. However, it is unsafe to access them both at the same time.

**How can I determine which type of GPIB controller I have installed?**

Run the `GPIBInfo` utility. If you run `GPIBInfo` without specifying any parameters, it returns information about the GPIB controllers currently configured for use in your system. For more information about `GPIBInfo`, refer to the *NI-488.2 User Manual for DOS*.

### How can I determine which version of the NI-488.2 software I have installed?

Run the `GPIBInfo` utility. If you run `GPIBInfo` without specifying any parameters, it returns information about the version of the NI-488.2 software currently installed. For more information about `GPIBInfo`, refer to the *NI-488.2 User Manual for DOS*.

### What do I do if `ibdiag` or `ibtest` fails with an error?

Refer to the troubleshooting sections of this chapter for specific information about what might cause these tests to fail.

### How do I use `ibic`?

You can use `ibic` to practice communication with your instrument, troubleshoot problems, and develop your application program. For instructions, refer to the *NI-488.2 User Manual for DOS*.

### How do I use a GPIB language interface?

For information about using the language interfaces, refer to the *NI-488.2 User Manual for DOS*.

### What information should I have before I call National Instruments?

Before you call National Instruments, make a note of the results of the `ibdiag` and `ibtest` tests and the output from `GPIBInfo`.

# 5

# Begin to Use the NI-488.2 Software

This chapter describes the `ibic` utility and lists some programming considerations.

## Using the ibic Utility

You can use `ibic`, the Interface Bus Interactive Control utility, to enter NI-488 functions and NI-488.2 routines interactively and to see the values returned by the function calls. Without writing an application, you can use `ibic` to do the following:

- Verify GPIB communication with your device quickly and easily.
- Learn the syntax of the functions and routines before writing your application.
- Become familiar with the commands of your device.
- Receive data from your GPIB device.
- Learn new functions and routines before integrating them into your application.

For more information about `ibic`, refer to the *NI-488.2 User Manual for DOS*.

## Programming Considerations

As you begin developing your GPIB application, remember the following points:

- You must include the GPIB header file in your source code.
- You must link the GPIB library with your compiled source code.

Also, notice that the NI-488.2 software includes readme files for most language interfaces, as well as sample programs.

For information about choosing a programming method, developing your application, or compiling and linking, refer to the *NI-488.2 User Manual for DOS*. For detailed information about each NI-488 function and NI-488.2 routine, refer to the *NI-488.2 Function Reference Manual for DOS/Windows*.

# A

# Specifications

This appendix lists the electrical, environmental, and physical characteristics of the GPIB-1284CT, along with recommended operating conditions.

## Electrical Characteristics

### AC Version

Power supply unit

100–120 VAC ±10% ..... 50–60 Hz
220–240 VAC ±10% ..... 50–60 Hz

Current requirement

100–120 VAC ..... 55 mA
220–240 VAC ..... 45 mA

Fuse rating and type

100–120 VAC ..... 300 mA, UL/CSA approved
220–240 VAC ..... 500 mA, IEC approved

### DC Version

DC input ..... +5 to +13 VDC, regulated

Minimum current requirement ..... 700 mA

## Environmental Characteristics

Operating temperature..... 0 to 40 °C

Storage temperature ..... 0 to 70 °C

Relative humidity ..... 10 to 95%, noncondensing

EMI ..... FCC Class A Verified

# Physical Characteristics

## AC Version

Overall case size (dimensions) .....11.8 by 7.75 by 4.42 cm
(4.65 by 3.05 by 1.74 in.)

Case material .....All metal enclosure

Weight .....11.52 oz (327 g)

## DC Version

Overall case size (dimensions) .....11.8 by 7.75 by 2.84 cm
(4.65 by 3.05 by 1.12 in.)

Case material .....All metal enclosure

Weight .....7.68 oz (218 g)

# B

# Updating Your Firmware

This appendix describes how to update your firmware for your GPIB-1284CT.

You can use the `ctupdate` utility to update your firmware (`*.mcs`). As parallel port standards evolve or as the hardware and/or software is enhanced, National Instruments provides updates of the software and the firmware.

**Caution** Do *not* update your firmware when your electrical power is unstable, such as during a weather storm. After you start `ctupdate`, do *not* power off your GPIB-1284CT until the update is complete.

To run the `ctupdate` utility, complete the following steps:

1. Type `ctupdate`, an *`imagefile`*`.mcs` name, and the parallel port number, as shown in the following example:

   ```
   ctupdate 702314b.mcs 1
   ```

   The utility transfers the imagefile into the EEPROM of your GPIB-1284CT. The utility then reads back the contents of the EEPROM to verify that the transfer was successful.

**Caution** Do *not* power off your GPIB-1284CT until the update is complete.

2. If `ctupdate` reports an error, do *not* power off your GPIB-1284CT. Make sure that your GPIB-1284CT is connected to the parallel port that you typed, and run `ctupdate` again. If errors persist, *leave the box powered on*, make a note of the error message, and contact National Instruments.
3. After `ctupdate` completes, power off your GPIB-1284CT and then back on to load the new EEPROM contents.

# C

# Technical Support Resources

This appendix describes the comprehensive resources available to you in the Technical Support section of the National Instruments Web site and provides technical support telephone numbers for you to use if you have trouble connecting to our Web site or if you do not have internet access.

## NI Web Support

To provide you with immediate answers and solutions 24 hours a day, 365 days a year, National Instruments maintains extensive online technical support resources. They are available to you at no cost, are updated daily, and can be found in the Technical Support section of our Web site at `www.ni.com/support`

### Online Problem-Solving and Diagnostic Resources

- **KnowledgeBase**—A searchable database containing thousands of frequently asked questions (FAQs) and their corresponding answers or solutions, including special sections devoted to our newest products. The database is updated daily in response to new customer experiences and feedback.
- **Troubleshooting Wizards**—Step-by-step guides lead you through common problems and answer questions about our entire product line. Wizards include screen shots that illustrate the steps being described and provide detailed information ranging from simple getting started instructions to advanced topics.
- **Product Manuals**—A comprehensive, searchable library of the latest editions of National Instruments hardware and software product manuals.
- **Hardware Reference Database**—A searchable database containing brief hardware descriptions, mechanical drawings, and helpful images of jumper settings and connector pinouts.
- **Application Notes**—A library with more than 100 short papers addressing specific topics such as creating and calling DLLs, developing your own instrument driver software, and porting applications between platforms and operating systems.

## Software-Related Resources

- **Instrument Driver Network**—A library with hundreds of instrument drivers for control of standalone instruments via GPIB, VXI, or serial interfaces. You also can submit a request for a particular instrument driver if it does not already appear in the library.
- **Example Programs Database**—A database with numerous, non-shipping example programs for National Instruments programming environments. You can use them to complement the example programs that are already included with National Instruments products.
- **Software Library**—A library with updates and patches to application software, links to the latest versions of driver software for National Instruments hardware products, and utility routines.

# Worldwide Support

National Instruments has offices located around the globe. Many branch offices maintain a Web site to provide information on local services. You can access these Web sites from `www.ni.com/worldwide`

If you have trouble connecting to our Web site, please contact your local National Instruments office or the source from which you purchased your National Instruments product(s) to obtain support.

For telephone support in the United States, dial 512 795 8248. For telephone support outside the United States, contact your local branch office:

Australia 03 9879 5166, Austria 0662 45 79 90 0, Belgium 02 757 00 20, Brazil 011 284 5011, Canada (Calgary) 403 274 9391, Canada (Ontario) 905 785 0085, Canada (Québec) 514 694 8521, China 0755 3904939, Denmark 45 76 26 00, Finland 09 725 725 11, France 01 48 14 24 24, Germany 089 741 31 30, Greece 30 1 42 96 427 Hong Kong 2645 3186, India 91805275406, Israel 03 6120092, Italy 02 413091, Japan 03 5472 2970, Korea 02 596 7456, Mexico (D.F.) 5 280 7625, Mexico (Monterrey) 8 357 7695, Netherlands 0348 433466, Norway 32 27 73 00, Singapore 2265886, Spain (Barcelona) 93 582 0251, Spain (Madrid) 91 640 0085, Sweden 08 587 895 00, Switzerland 056 200 51 51, Taiwan 02 2377 1200, United Kingdom 01635 523545

# Glossary

| Prefix | Meaning | Value |
|---|---|---|
| m- | milli- | $10^{-3}$ |
| c- | centi- | $10^{-2}$ |
| k- | kilo- | $10^{3}$ |

| | |
|---|---|
| ° | degrees |
| % | percent |
| A | amperes |
| AC | alternating current |
| ANSI | American National Standards Institute |
| BIOS | Basic Input/Output System |
| C | Celsius |
| CSA | Canadian Standards Association |
| DC | direct current |
| DIP | dual inline package |
| EEPROM | electrically erasable programmable read-only memory |
| EMI | electromagnetic interference |
| EPP | Enhanced Parallel Port |
| FCC | Federal Communications Commission |
| g | grams |
| GPIB | General Purpose Interface Bus |
| Hz | hertz |
| ibic | Interface Bus Interactive Control |
| IEC | International Electrotechnical Commission |
| IEEE | Institute for Electrical and Electronic Engineers |

| | |
|---|---|
| in. | inches |
| I/O | Input/Output |
| KB | kilobytes of memory |
| LED | light-emitting diode |
| m | meters |
| oz | ounces |
| PC | personal computer |
| PS/2 | IBM Personal System/2 |
| RAM | random-access memory |
| UL | Underwriters Laboratories |
| V | volts |
| VAC | volts alternating current |
| VDC | volts direct current |