N1090A DCA-M

Optical and Electrical Sampling Oscilloscope

Introduction

High accuracy, low cost solutions for optical and electrical waveform analysis including solutions for < 1 Gb/s through 11.3 Gb/s, very low noise and jitter, and fast sampling rates for high throughput.

The Keysight Technologies, Inc. N1000 and 86100 digital communication analyzer (DCA) family is recognized as the industry standard for verifying optical transmitter compliance to communications standards. For years engineers have trusted the DCA to provide accurate and easy measurement of digital communication waveforms. The Keysight N109X DCA-M family has built on that legacy by using the high-performance elements of both the 86100 oscilloscope mainframe acquisition system and the optical and electrical channel hardware of the 861XX and N104X plug-in modules.

KEYSIGHT

Small Form Factor Ideal for Both Manufacturing and R&D Applications

Unlike the 86100D and N1000A, which use modules to create a waveform analysis system, the N1090A is completely integrated instruments built in a small form factor. Low noise, high-sensitivity calibrated optical reference receivers — compliant to industry standard tolerances — are available for both multimode and single-mode, creating a measurement system with very high dynamic range. Electrical channels are available with 20 GHz bandwidths.

Controlling the N1090A

There are three ways to control the N1090A system

- A PC directly connected to the N1090A with a USB cable
- An 86100D or N1000A mainframe connected to the N1090A with a USB cable. (The mainframe can then be controlled via GPIB or LAN)
- For an automated test system environment, the simplest and preferred method to control the N1090A is to connect the primary test system PC to a low-cost modern PC via LAN. The FlexDCA interface resides on the second PC. The second PC is then connected to the N1090A via USB. This eliminates most issues of compatibility between an existing test system PC and the N1090A hardware and can greatly simplify converting an 86100D system to an N1090A system

Figure 1. N1090A connected to PC

The N1090A user interface and operating system is identical to the modern FlexDCA interface of the 86100D and N1000A. A user-provided PC running N1010A FlexDCA software controls the N1090A over a simple USB 2.0 or 3.0 connection.

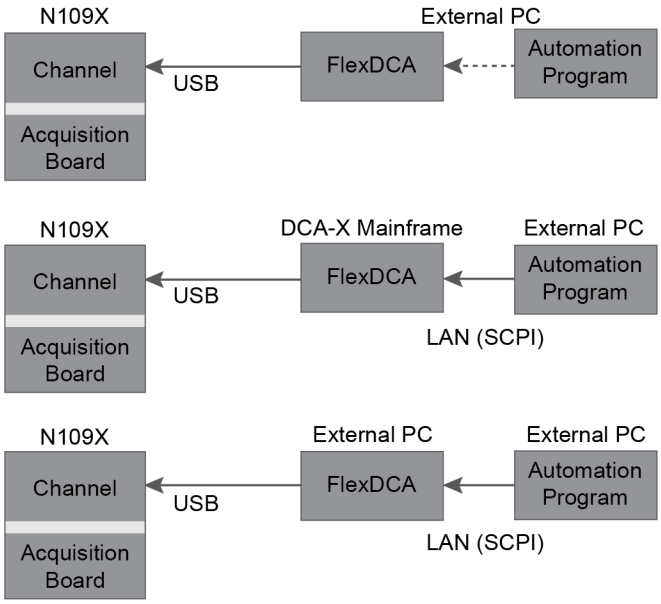

Figure 2. Connection schemes

System setup

The following guidelines are the PC requirements when connected to the DCA-M module and running the FlexDCA interface for a single channel setup:

- Intel I3 processor or better with 4 GB memory
- Windows 10 or 11 (64 bit)

For a parallel test setup (multiple instruments or multiple channels):

- Intel I5 or better with 8 GB memory

The communication API between your system controller and the PC is SCPI over LAN, either VXI-11 or HiSlip. If NI-VISA or IO Libraries are used to communicate with GPIB instruments, the switch to SCPI/LAN is very simple. It is important to note that there is no need to do any USB programming. This is all handled by the FlexDCA interface.

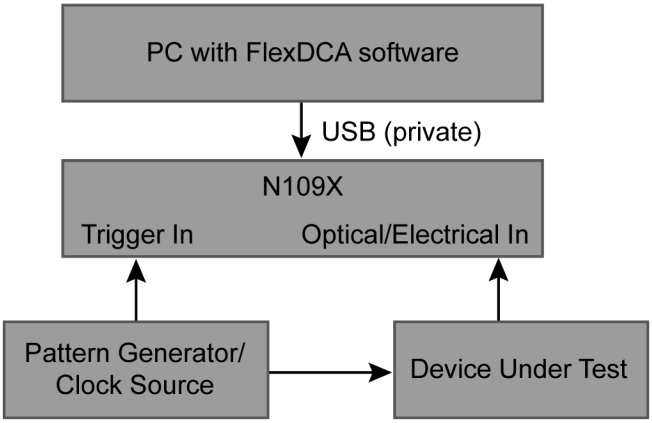

Figure 3. N1090X test setup

The FlexDCA interface is free and can be downloaded at www.keysight.com/find/flexdca_download. Remote programs previously developed using the 86100 or N1000 FlexDCA interface can be leveraged directly to control an automated N109X system. Use FlexDCA SCPI programming tools to simplify conversion of legacy 86100-based automation to FlexDCA compatible code. Measurement results are generally faster with the new N109X due to significantly faster sampling rates.

Similar to the 86100 and N1000, a reference clock, synchronous with the signal being measured, is required to trigger the N109X. Timebase calibration, previously performed at service centers, can now be performed by users, reducing cost of ownership and instrument down time.

N1090A Configurations

Choose from the following reference receiver options to best meet your measurement needs. Select one option. Options cannot be combined. However if test needs change, the N1090A can be returned to a Keysight service center to convert from any of the five reference receiver options to one of the other four options listed. Unfiltered mode is not available in any option.

Model/option number	Description
N1090A-140	Reference receiver filters for 1.244/1.25/1.229 Gb/s
N1090A-160	Reference receiver filters for 2.458/2.488/2.5 Gb/s
N1090A-200	Reference receiver filters for 8.5/9.95/10.3/10.5/10.66/10.71/11.1/11.3 Gb/s
N1090A-204	Reference receiver filters for 8.5/9.95/10.3/10.5 Gb/s
N1090A-EEC	Enable electrical channel
N1090A-PLK	Pattern lock trigger hardware
N1090A-IRC	Impulse response correction[1]
N1090A-C0C	Certificate of Calibration
N1090A-UK6	Commercial calibration certificate with test data
N1090A-1CM	Single instrument rack mount kit
N1090A-1CN	Dual instrument side-by-side rack mount kit

1. Requires option PLK.

Module SIRC Filters

System Impulse Response Correction (SIRC) filters provide channel SIRC measurement and data files to give an ideal channel response. SIRC correction data is unique to a specific DCAM-M serial number and can be applied in FlexDCA's System Impulse Response Correction dialog. The SIRC correction data feature is a digital filter that is used to:

- Improve the response of module reference filters to more closely match an ideal receiver.
- Enable non-standard reference receiver rates or bandwidths.
- Increase the bandwidth of the channel by up to 50%.
- Ensures that an eye diagram will look identical between different modules.

N1090A SIRC filter ranges

Module/Option	Channel	Range[1, 2] Min SIRC Freq.	Range[1, 2] Max SIRC Freq.
N1090A Option 140 or 160	All	50% of filter rate	150% of filter rate
N1090A Option 200, *or* 204	All	4.97 GBd (3.73 GHz)	16.06 GBd (12.05 GHz)

1. Optical NRZ signals typically require a 4 pole Bessel filter at 75% of the data rate; Optical PAM 4 signals typically require a 4 pole Bessel filter at 50% of the data rate.
2. Only available with option IRC and compliance not guaranteed.

N1090A Specifications

Optical channel specifications

Item	Description
Nominal Wavelength Range	750 nm to 1650 nm
Factory calibrated wavelengths (OE conversion gains)	850 nm (± 20 nm) 1310 nm (± 20 nm) 1550 nm (± 20 nm)
Reference receiver filter options (only one option can be installed)	**Description**
N1090A-140	GPON, 1.244 Gb/s Gigabit Ethernet, 1.250 Gb/s
N1090A-160	OC-48/STM-16, 2.488 Gb/s 2 Gb Ethernet, 2.500 Gb/s
N1090A-200	8x Fibre Channel, 8.500 Gb/s OC-192/STM-64, 9.953 Gb/s 10 Gb Ethernet, 10.3125 Gb/s 10x Fibre Channel, 10.51875 Gb/s OC-192/STM-64 FEC, 10.664 Gb/s OC-192/STM-64 FEC, 10.709 Gb/s 10 Gb Ethernet FEC, 11.0957 Gb/s 10x Fibre Channel FEC, 11.317 Gb/s
N1090A-204	8x Fibre Channel, 8.500 Gb/s OC-192/STM-64, 9.953 Gb/s 10 Gb Ethernet FEC, 10.3125 Gb/s 10x Fibre Channel, 10.51875 Gb/s
Measured frequency response data during recertification falls within performance test line limits with allowance for system-to-system measurement uncertainty.	
Sensitivity at 850 nm. (Characteristic - smallest average power for mask test) [1]	**Description**
Option 140	*−17.5 dBm (Characteristic)*
Option 160	*−17.5 dBm (Characteristic)*
Option 200 and 204	*−13.5 dBm (Characteristic)*
Sensitivity at 1310 nm / 1550 nm. (Characteristic - smallest average power for mask test) [1]	**Description**
Option 140	*−18.5 dBm (Characteristic)*
Option 160	*−18.5 dBm (Characteristic)*
Option 200 and 204	*−14.5 dBm (Characteristic)*
RMS Noise at 850 nm [1]	**Description**
Option 140	2.8 µW (Maximum), *1.8 µW (Characteristic)*
Option 160	2.8 µW (Maximum), *1.8 µW (Characteristic)*
Option 200 and 204	4.0 µW (Maximum), *2.5 µW (Characteristic)*
RMS Noise at 1310 nm / 1550 nm [1]	**Description**
Option 140	2.0 µW (Maximum), *1.3 µW (Characteristic)*
Option 160	2.0 µW (Maximum), *1.3 µW (Characteristic)*
Option 200 and 204	2.5 µW (Maximum), *1.4 µW (Characteristic)*

1. This specification applied to N1090A instruments with serial numbers MY/US66060101 and above. N1090A with serial numbers MY63230230 and below that undergo repair are tested and guaranteed to meet this specification.

Electrical channel specifications (Option EEC)

Item	Description
Electrical Channel Bandwidth	*12.4 and 20 GHz (Characteristic)*
Transition Time (10% to 90% calculated from TR = 0.35/BW)	**Description**
12.4 GHz	28.2 ps
20 GHz	17.5 ps
RMS Noise	**Description**
Characteristic	*0.25 mV (12.4 GHz)* *0.5 mV (20 GHz)*
Maximum	0.5 mV (12.4 GHz) 1 mV (20 GHz)
Scale Factor (full height is eight divisions)	**Description**
Minimum	1 mV/division
Maximum	100 mV/division
DC Accuracy (single marker)	**Description**
12.4 GHz	± 0.4% of full scale ± 2 mV ± 1.5% of (reading – channel offset)
20 GHz	± 0.4% of full scale ± 2 mV ± 3% of (reading – channel offset)
DC Offset Range (referenced to center of display graticule)	± 500 mV
Input Dynamic Range (relative to channel offset)	± 400 mV
Maximum Input Signal	± 2 V DC (+16 dBm)
Nominal Impedance	50 Ω
Electrical Input	SMA (female)

N1090A horizontal timebase specifications

Item	Description
Scale Factor	**Full scale is ten divisions**
Minimum	100 fs/div
Maximum	100 µs/div
Sample Delay [1]	< 10 ns
Time Interval Accuracy [2]	1 ps + 0.2% of the measured time interval while the delay settings is less that the absolute minimum delay plus 1 ns
	If the delay setting is greater than the absolute minimum delay plus 1 ns then the accuracy is 5 ps + 0.1% of the measured time interval
Jitter (slew rate ≥2 V/ns)	500 fs rms
Time Interval Resolution [3]	screen diameter / record length or 40 fs, whichever is larger
Display Units	Bits or time
Record length [4]	16 to 131,072 without pattern lock, 1 to 268,435,456 with pattern lock and "Acquire Entire Pattern"
Sample rate	60 kHz

1. Time delay between the front panel clock input and when a sample is taken on the front panel channel input .
2. Dual marker measurement performed at a temperature within ± 5 °C of horizontal calibration temperature.
3. The time interval resolution is the smallest time you can characterize between two points.
4. Maximum number of samples depends on pattern, number of active channels, available memory, pattern lock enabled, and *Acquire Entire Pattern* enabled.

Scale factor specifications (per division)

Item	Description
Minimum	2 µW
Maximum	100 µW
CW Accuracy (single marker, referenced to average power monitor)	**Description**
Single Mode	± 25 µW ± 3%
Multimode	± 25 µW ± 10%
CW Offset Range (referenced two divisions from screen bottom)	+0.2 mW to −0.6 mW
Average Power Monitor	−30 dBm to 0 dBm
Average Power Monitor Accuracy	**Description**
Single Mode	± 5% ± 200 nW ± connector uncertainty
Multimode	*± 10% ± 200 nW ± connector uncertainty (Characteristic)*
Due to variations in mode-filling conditions, the measured power in multimode fiber will vary more than the measured power in single-mode fiber. For users needing the most accurate power measurements, use an optical power meter for multimode power measurements.	
User Calibrated Accuracy (Assumes connector is continually attached)	**Description**
Single Mode	± 3% ± 200 nW ± power meter uncertainty
Multimode	*± 10% ± 200 nW ± power meter uncertainty (Characteristic)*
Maximum Input Power	**Description**
Maximum Non-destruct Average	0.5 mW (−3 dBm)
Maximum Non-destruct Peak	5 mW (+7 dBm)
Input Return Loss	**Description**
1310 nm / 1550 nm	> 24 dB
Fiber Input	62.5/125 µm
Fiber Input Connector	FC/PC

Clock input specifications

Item	Description
Clock Input Non-destruct Voltage	1.4 Vp-p
Clock Input Frequency	455 MHz to 12 GHz (full rate or sub-rate clocks, pattern lock mode on or off)
	100 MHz to 455 MHz (sub-rate clocks only, pattern lock off, provided that the data rate exceeds 455 Mb/s and the clock divide ratio is a power of two)
Clock Input Sensitivity	200 mVp-p
Minimum Clock Slew Rate	0.5 V/ns
Nominal Input Impedance	50 Ω (AC coupled)
Clock Input Connector	2.92 mm (female)

Environmental specifications

Item	Description
Use	For indoor use only
Temperature	**Description**
Operating	10 °C to +40 °C (50 °F to +104 °F)
Non-operating	–40 °C to +70 °C (–40 °F to +158 °F)
Altitude	Up to 4,600 meters (15,000 ft)
Humidity [1]	Type tested at 95%, +40 °C (non-condensing)
Weight (Characteristic)	**6.20 kg (13.68 lb)**
Without front connectors and rear feet	88.26 mm H x 207.40 mm W x 485 mm D (3.48 inch x 8.17 inch x 19.01 inch)
With front connectors and rear feet	103.31 mm H x 219.56 mm W x 517.80 mm D (4.07 inch x 8.64 inch x 20.39 inch)
With front cover and rear feet	110.18 mm H x 219.56 mm W x 550.71 mm D (4.34 inch x 8.64 inch x 21.68 inch)

1. Samples of this product have been type tested in accordance with the Keysight Environmental Test Manual and verified to be robust against the environmental stresses of Storage, Transportation and End-use; those stresses include but are not limited to temperature, humidity, shock, vibration, altitude and power line conditions. Test Methods are aligned with IEC 60068-2 and levels are similar to MIL-PRF-28800F Class 3.

N1090A LINE power specifications

Item	Description
Voltage and/or range	100–120 Vac, 50/60/400 Hz
	220–240 Vac, 50/60 Hz
Power in Watts	290 Watts Maximum
The instrument can operate with mains supply voltage fluctuations up to ± 10% of the nominal voltage.	

Ordering Information — N1090A

The legacy FlexDCA feature-based software options such as 200, 201, etc. have been replaced with the following new FlexDCA Sampling Oscilloscope Software Packages.

Keysight recommends the use of the FlexDCA software PACKAGEs which can be installed on the PC controlling your DCA-M or on the DCA-M (node-locked and device-locked licenses).

Support subscriptions are available for FlexDCA software PACKAGEs which enable both bug fixes and new functionality. The software FEATURE-based options will get no new functionality.

N1010100A research and development package for FlexDCA sampling oscilloscope software

This package is Intended for R&D engineers who want to characterize their design and gain more insights into why a signal deviates from the expected performance.

N1010200A manufacturing package for FlexDCA sampling oscilloscope Software

This package focuses on cost of test in Optical Transceiver manufacturing applications with capabilities like FlexEye. FlexEye is an independent eye acquisition and analysis feature that operates DCA channels as independent single-channel instruments to maximize the throughout and provide more flexibility for your manufacturing design.

N1010300A signal integrity package for FlexDCA sampling oscilloscope software

This package adds powerful tools to measure impedances, transfer characteristics and S-parameter calculations to the basic TDR/TDT measurements.

Confidently Covered by Keysight Services

Prevent delays caused by technical questions, or system downtime due to instrument maintenance and repairs with Keysight Services. Keysight Services are here to support your test needs with expert technical support, instrument repair and calibration, software support, training, alternative acquisition program options, and more.

A KeysightCare agreement provides dedicated, proactive support through a single point of contact for instruments, software, and solutions. KeysightCare covers an extensive group of instruments, application software, and solutions and ensures optimal uptime, faster response, faster access to experts, and faster resolution.

Keysight Services

Offering	Benefits
KeysightCare KEYSIGHTCARE	KeysightCare provides elevated support for Keysight instruments and software, with access to technical support experts that respond within a specified time and ensure committed repair and calibration turnaround times (TAT). KeysightCare offers multiple service agreement tiers, including KeysightCare Assured, Enhanced, and Application Software Support. See the KeysightCare data sheet for details.
KeysightCare Assured	KeysightCare Assured goes beyond basic warranty with repair services that include committed TAT and unlimited access to technical experts.
KeysightCare Enhanced	KeysightCare Enhanced includes all the benefits of KeysightCare Assured plus Keysight's accurate and reliable calibration services, accelerated, and committed TAT, and technical response.
Keysight Support Portal & Knowledge Center	All KeysightCare tiers include access to the Keysight Support Portal where you can manage support and service resources related to your assets such as service requests, and status, or browse the Knowledge Center.
Education Services	Build confidence and gain new skills to make accurate measurements, with flexible Education Services developed by Keysight experts. Including Start-up Assistance.
Alternative acquisition options	
KeysightAccess	Reduce budget challenges with a subscription service enabling you to get the instruments, software, and technical support you want for your test needs.

Recommended Services

Maximize your test system up-time by securing technical support, repair, and calibration services with committed response and turnaround times. 1-year KeysightCare Assured is included in every new instrument purchase. Obtain multi-year KeysightCare upfront to eliminate the need for lengthy and tedious paperwork and yearly requests for maintenance budget. Plus, you benefit from secured service for 2, 3, or 5 years.

Keysight Services

Service	Function
KeysightCare Enhanced[1]	**Includes tech support, warranty and calibration**
R-55B-001-1	KeysightCare Enhanced – Upgrade 1 year
R-55B-001-2	KeysightCare Enhanced – Extend to 2 years
R-55B-001-3	KeysightCare Enhanced – Extend to 3 years (Recommended)
R-55B-001-5	KeysightCare Enhanced – Extend to 5 years (Recommended)
KeysightCare Assured	**Includes tech support and warranty**
R-55A-001-2	KeysightCare Assured – Extend to 3 years
R-55A-001-3	KeysightCare Assured – Extend to 3 years
R-55A-001-5	KeysightCare Assured – Extend to 5 years
Start-Up Assistance	
PS-S40-01 *or* -04	Instrument fundamentals and operations starter
PS-S40-02	Optional – technology and measurement science standard learning

1. Available in select countries. For details, please view the datasheet. R-55B-001-2/3/5 must be ordered with R-55B-001-1.

Keysight enables innovators to push the boundaries of engineering by quickly solving design, emulation, and test challenges to create the best product experiences. Start your innovation journey at www.keysight.com

This information is subject to change without notice. © Keysight Technologies, 2019 – 2026, Published in USA, February 4, 2026, 5992-3655EN