COMPREHENSIVE SERVICES

We offer competitive repair and calibration services, as well as easily accessible documentation and free downloadable resources.

SELL YOUR SURPLUS

We buy new, used, decommissioned, and surplus parts from every NI series. We work out the best solution to suit your individual needs.

- Sell For Cash
- Get Credit
- Receive a Trade-In Deal

OBSOLETE NI HARDWARE IN STOCK & READY TO SHIP

We stock **New, New Surplus, Refurbished,** and **Reconditioned** NI Hardware.

APEX WAVES

Bridging the gap *between the manufacturer and your legacy test system.*

1-800-915-6216

www.apexwaves.com

sales@apexwaves.com

All trademarks, brands, and brand names are the property of their respective owners.

Request a Quote CLICK HERE **PCI-5152**

NOTE TO USERS

Maintain Forced-Air Cooling

このドキュメントには、日本語ページも含まれています。

Inadequate air circulation can cause the temperature inside a PXI, PXI Express, or PC chassis/case to rise above the maximum recommended operating temperature for your device, potentially causing thermal shutdown or damage to the device. Refer to the documentation for your device for more information about thermal shutdown. Refer to your chassis documentation for more information about air circulation paths, fan settings, space allowances, and cleaning procedures.

PXI/PXI Express Devices

Use the following guidelines to maintain optimal forced-air cooling for PXI/PXI Express devices:

☐ National Instruments highly recommends installing slot blockers in unused slots to maximize air flow in the slots populated with devices. Refer to `ni.com/info` and enter the Info Code `pxisb` for information about slot blockers.

☐ Install filler panels over all unused slots after installing your devices. Missing filler panels disrupt the necessary air circulation in the chassis.

☐ Allow plenty of space around the chassis fan intake and exhaust vents. Blocked fan vents impede the air flow needed for cooling. If you remove the chassis feet, allow for adequate clearance below the chassis. Refer to your chassis user manual for further information about fan location, chassis orientation, and clearances.

Often, ambient temperature is a concern for rack-mount deployments. If your PXI system is deployed in a rack, the following guidelines should be considered:

- Place high-power units within the rack above the PXI system(s) where possible.
- Use racks with open sides and/or rear panels.
- Use fan trays within the rack, and at the top and bottom of the rack, to increase overall air flow. This will reduce ambient temperatures within the rack.
- Use other methods that reduce ambient temperatures within the rack.

Note The ambient temperature of a PXI system is defined as the temperature at the chassis fan inlet (air intake).

In addition to ensuring the ambient temperature of your PXI system is within the specifications for all of the system components, it is vital to provide adequate cooling clearances for your chassis so the required chassis air flow is achieved.

Your chassis must be installed so cooling clearances meet the specifications stated in your user manual. A typical example for a PXI chassis with a rear air intake and top/side exhaust, provides for a minimum of 76.2 mm (3 in.) of clearance from the air intake on the rear of the chassis and 44.5 mm (1.75 in.) of clearance above and on the sides of the chassis.

NATIONAL INSTRUMENTS™

The following figure shows an example of a chassis with the required cooling clearances.

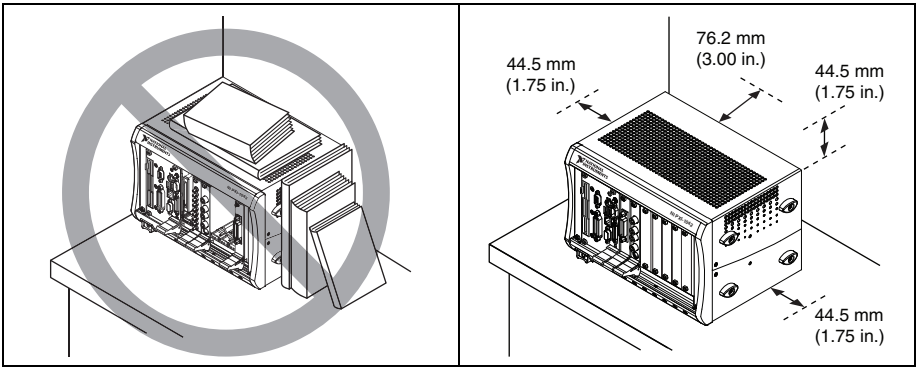

Note The previous diagram shows example dimensions, refer to your chassis user manual for specific chassis clearance dimensions.

- ☐ If your chassis includes fan filters, clean them at least every six months. Depending on the amount of chassis use and the ambient dust levels, filters may require more frequent cleaning. If regular maintenance of dirty or clogged filters is not possible, you can remove foam filters to maintain adequate cooling.
- ☐ Set all chassis fans to **High**, unless directed otherwise by the PXI(e) module user manual. Do *not* disable the fan(s).
- ☐ Ensure the ambient temperature does not exceed the rated ambient temperature specification. Refer to the chassis temperature LED, if available (refer to chassis user manual for LED behavior description), or use a temperature probe to verify temperature. Refer to your chassis user manual for further information about ambient temperature.

PCI/PCI Express Devices

Use the following guidelines to maintain optimal forced-air cooling for PCI/PCI Express devices:

- ☐ Install all filler panels after installing the device.

  Missing filler panels disrupt the necessary air circulation in the chassis.
- ☐ Allow plenty of space around the chassis/case fan intake and exhaust vents.

  Blocking the fan vents impedes the air flow needed for cooling.
- ☐ Maintain proper airflow for devices with onboard fans.
  - – Ensure that the onboard fan is not obstructed.
  - – Leave the slot adjacent to the fan side of the PCI/PCI Express device empty. If you must use the adjacent slot, install a device that allows for the maximum amount of clearance between the fan and the adjacent device (for example, low-profile devices).

- ☐ Maintain proper airflow for devices without onboard fans.
  - Ensure that the PC chassis/case has active cooling that provides airflow across the card cage.
  - Leave the slots adjacent to the PCI/PCI Express device empty. If you must use an adjacent slot, install devices that allow for the maximum amount of clearance between each device (for example, low-profile devices).

The following table shows the difference between PCI/PCI Express devices with and without onboard fans.

PCI/PCI Express Device with Onboard Fan	PCI/PCI Express Device without Onboard Fan
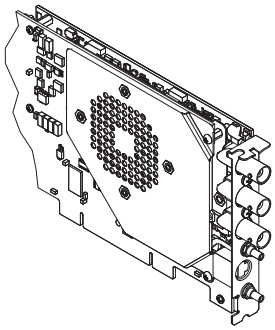	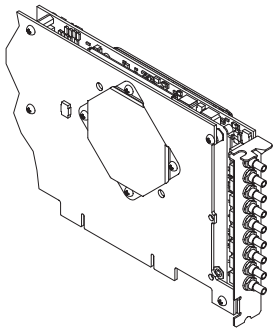

Worldwide Support and Services

The National Instruments website is your complete resource for technical support. At `ni.com/support` you have access to everything from troubleshooting and application development self-help resources to email and phone assistance from NI Application Engineers.

Visit `ni.com/services` for NI Factory Installation Services, repairs, extended warranty, and other services.

Visit `ni.com/register` to register your National Instruments product. Product registration facilitates technical support and ensures that you receive important information updates from NI.

National Instruments corporate headquarters is located at 11500 North Mopac Expressway, Austin, Texas, 78759-3504. National Instruments also has offices located around the world. For telephone support in the United States, create your service request at `ni.com/support` or dial 1 866 ASK MYNI (275 6964). For telephone support outside the United States, visit the Worldwide Offices section of `ni.com/niglobal` to access the branch office websites, which provide up-to-date contact information, support phone numbers, email addresses, and current events.

Refer to the *NI Trademarks and Logo Guidelines* at `ni.com/trademarks` for more information on National Instruments trademarks. Other product and company names mentioned herein are trademarks or trade names of their respective companies. For patents covering National Instruments products/technology, refer to the appropriate location: **Help»Patents** in your software, the `patents.txt` file on your media, or the *National Instruments Patents Notice* at `ni.com/patents`. You can find information about end-user license agreements (EULAs) and third-party legal notices in the readme file for your NI product. Refer to the *Export Compliance Information* at `ni.com/legal/export-compliance` for the National Instruments global trade compliance policy and how to obtain relevant HTS codes, ECCNs, and other import/export data. NI MAKES NO EXPRESS OR IMPLIED WARRANTIES AS TO THE ACCURACY OF THE INFORMATION CONTAINED HEREIN AND SHALL NOT BE LIABLE FOR ANY ERRORS. U.S. Government Customers: The data contained in this manual was developed at private expense and is subject to the applicable limited rights and restricted data rights as set forth in FAR 52.227-14s, DFAR 252.227-7014, and DFAR 252.227-7015.

© 2003–2014 National Instruments. All rights reserved.

373677L May14