PXIe-4150 User Manual

2025-07-23

Contents

PXIe-4150 User Manual 4
PXIe-4150 Overview 5
Components of a PXIe-4150 System 8
Cables and Accessories 10
Programming Options 11
PXIe-4150 Theory of Operation 13
Block Diagram 14
PXIe-4150 Front Panel 16
PXIe-4150 Pinout 18
PXIe-4150 LED Indicators 21
PXIe-4150 Installation and Configuration 24
Unpacking the Kit 24
Kit Contents 25
Installing the Software 25
Installing the PXIe-4150 into a Chassis 26
Installing the Auxiliary 48 V Power Source on the PXIe-4150 27
Selecting an Output Accessory for Your Application 28
Installing the Output Connector Assembly and Backshell Assembly onto the PXIe-4150 28
Installing the Output and AUX I/O Connector on the PXIe-4150 35
Verifying the Installation in MAX 37
What Should I Do if the PXIe-4150 Does Not Appear in MAX? 38
Configuring the PXIe-4150 in Hardware Configuration Utility 39
What Should I Do if the PXIe-4150 Fails the Self-Test? 39
Self-Calibrating the PXIe-4150 in MAX 39
Inhibit Mode 40
Inhibit Mode Selection 41
Using Auxiliary Power with the PXIe-4150 42
Power Budgeting 42
Connecting Signals to the PXIe-4150 44
Making Local Sense Measurements 44
Making Remote Sense Measurements 45

Minimizing Voltage Drop Loss when Cabling 46
PXIe-4150 Operating Guidelines 49
Sourcing and Sinking 49
Output Impedance. 51
Protection 53
Overload Protection (OLP) 54
INHIBIT Pin 55
Load Regulation 56
Inductive Loads 57
Capacitive Loads 57
Transient Response 58
Pulse Loads 59
Reverse Current Loads 59
Ranges 60
Noise 61
Power Measurements 64
Resistance Measurements 64
Sourcing and Measuring Terminology. 66
Sourcing Voltage and Current 68
Initialize a Session 69
Configure the PXIe-4150 for Sourcing 69
Configure the PXIe-4150 for Measuring. 71
Configure Triggers and Events 72
Initiate the PXIe-4150 for Sourcing and Measuring 79
Acquire Measurements 79
Cease Generation 80
Close the Session 82
Cleaning the PXIe-4150 System 84

PXIe-4150 User Manual

The PXIe-4150 User Manual provides detailed descriptions of the product functionality and the step by step processes for use.

Looking for Something Else?

For information not found in the User Manual for your product, such as specifications and API reference, browse ***Related Information***.

Related information:

- PXIe-4150 Specifications
- NI-DCPower Help
- NI-DCPower LabVIEW VI Reference
- NI-DCPower Properties
- NI-DCPower C Function Reference
- NI-DCPower .NET API Overview
- NI-DCPower Python Reference
- NI-DCPower and LabVIEW Compatibility
- Software and Driver Downloads
- Release Notes
- License Setup and Activation
- Dimensional Drawings
- Product Certifications
- Letter of Volatility
- Discussion Forums
- NI Learning Center

PXIe-4150 Overview

The PXIe-4150 is a single-channel programmable power supply featuring enhanced capabilities including programmable compensation using SourceAdapt technology; it is designed for engineers building PXI systems that require voltage or current sourcing and measurement.

Use the PXIe-4150 in applications including manufacturing test, board-level test, and lab characterization with devices such as ICs, power management ICs (PMICs), DC-DC converters, and anywhere a highly configurable programmable power supply is required.

Device Capabilities

The PXIe-4150 is a high-precision programmable power supply that has the following features and capabilities.

- 300 W DC output
- Current Ranges: 10 A, 1 A, 100 mA
- Voltage Ranges: 60 V, 6 V
- Voltage local and remote sense
- Advanced sequences and steps
- 1.8 MSample/s maximum sampling rate and 100 kSample/s maximum update rate
- SourceAdapt technology

Figure 4. PXIe-4150 Quadrant Diagram, 0 °C to 40 °C

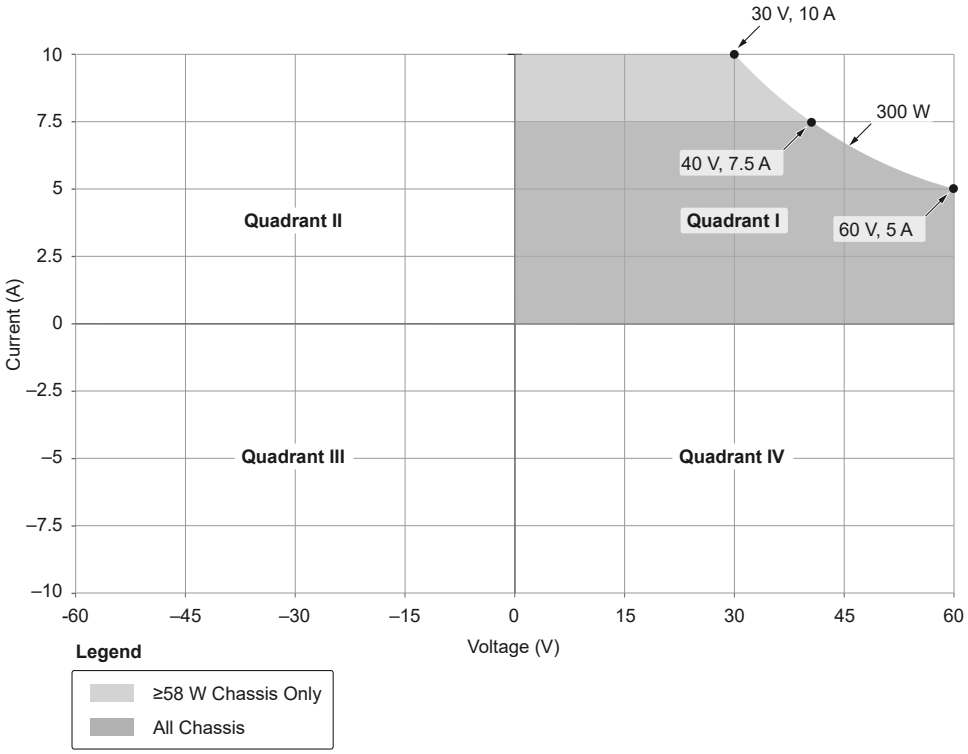

Figure 5. PXIe-4150 Quadrant Diagram, >40 °C

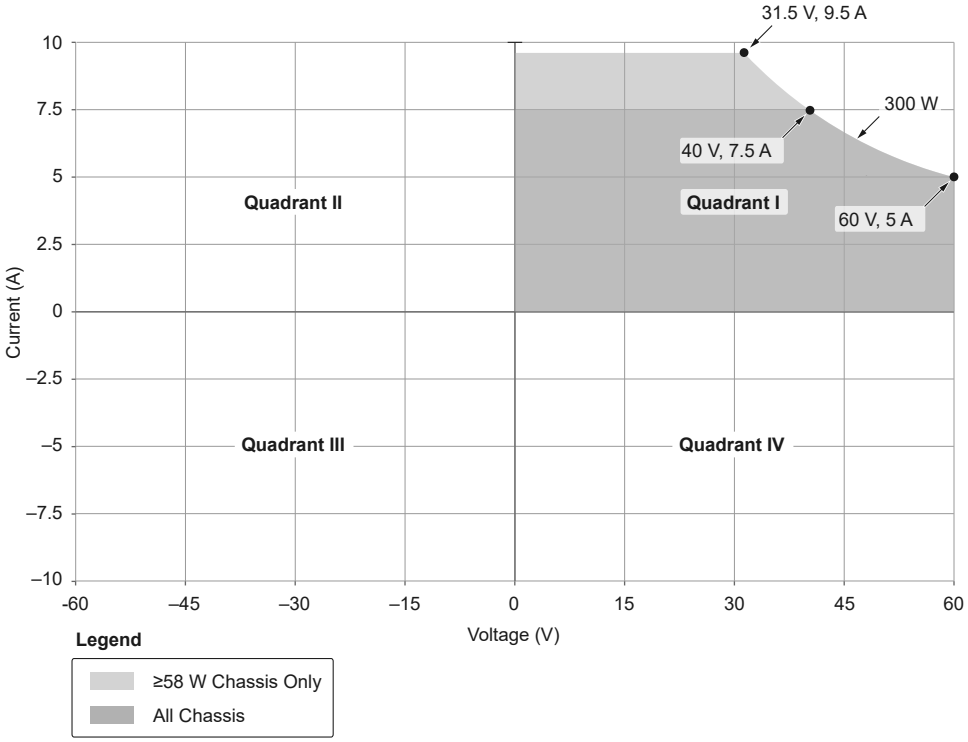

Driver Support

NI recommends that you use the newest version of the driver for your module.

Table 5. Earliest Driver Version Support

Driver Name	Earliest Version Support
NI-DCPower	2024 Q3, Patch 2

Components of a PXIe-4150 System

The PXIe-4150 is designed for use in a system that includes other hardware components, drivers, and software.

> **Notice** A system and the surrounding environment must meet the requirements defined in ***PXIe-4150 Specifications***.

The following list defines the minimum required hardware and software for a system that includes a PXIe-4150.

Table 6. System Components

Component	Description and Recommendations
PXI Chassis 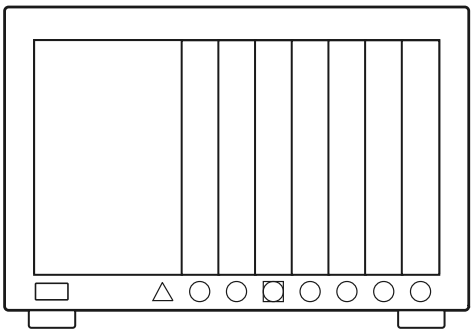	A PXI chassis houses the PXIe-4150 and supplies power for PXIe-4150 functions. **Note** NI recommends installing the PXIe-4150 in a chassis with slot cooling capacity ≥58 W for increased module capability.
PXI Controller or PXI Remote Control Module 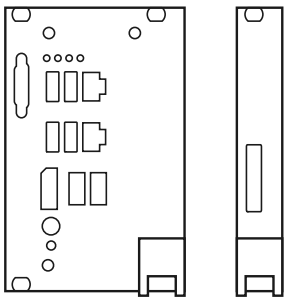	You can install a PXI controller or a PXI remote control (MXI) module depending on your system requirements. These components, installed in the same PXI chassis as the PXIe-4150, interface with the instrument using NI device drivers.

Component	Description and Recommendations
Auxiliary Power Supply 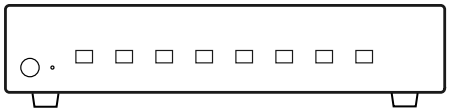	An auxiliary 48 V power source provides output power from the PXI system and accommodates the power demand for applications. Refer to ***Using Auxiliary Power with the PXIe-4150*** for more information.
Cables and Accessories 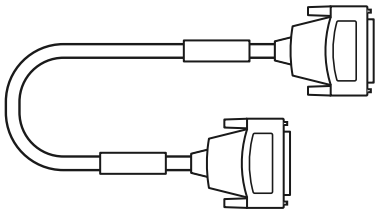	Cables and accessories allow connectivity to/from your instrument for measurements. Refer to ***Cables and Accessories*** for recommended cables and accessories and guidance.
NI-DCPower Driver 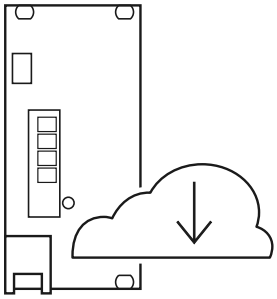	Instrument driver software that provides functions to interact with the PXIe-4150 and execute measurements using the PXIe-4150. **Note** NI recommends using the most current version of NI-DCPower with the PXIe-4150.
NI Applications 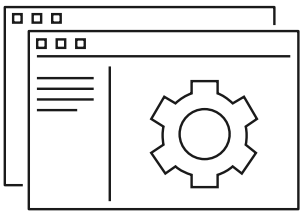	NI-DCPower offers driver support for the following applications: • InstrumentStudio • LabVIEW • LabWindows/CVI • C/C++ • .NET • Python

Related concepts:

- Using Auxiliary Power with the PXIe-4150
- Cables and Accessories
- Programming Options

Cables and Accessories

NI recommends using the following cables and accessories with your module.

Table 7. Cables and Accessories

Accessory/Cable	Description	Part Number
Connector Kit for PXIe-415x and PXIe-405x	Output connector and backshell assembly, ships with the PXIe-4150	788197-01
APS-4157/4158/4159	1-Channel Auxiliary Power Supply, 400 W, 48 V	789776-01
	8-Channel Auxiliary Power Supply, 1200 W, 48 V	788201-01
	8-Channel Auxiliary Power Supply, 2400 W, 48 V	788201-02
Auxiliary Power Cable for APS-415X	1 m	788199-01
	0.5 m	788199-0R5
APS-415x Rack Mount	Rack mount kit for APS-4158/4159 Auxiliary Power Supplies	786340-01
Calibration Connectivity Kit for PXIe-4150/1 Programmable Power Supplies & PXIe-4051 Electronic Load	Calibration accessory for the PXIe-4150/1	789107-01
PXI slot blockers	PXI slot blocker, set of five	199198-01

Additional Cabling and Accessory Guidance

NI recommends installing PXI slot blockers (p/n 199198-01) to fill any empty instrument slots in a PXI chassis. Refer to ***ni.com/r/pxiblocker*** for more information

on installing slot blockers and filler panels.

Related information:

- NI SMU Cable and Accessory Compatibility
- Installing Slot Blockers and Filler Panels

Programming Options

You can generate signals interactively using InstrumentStudio or you can use the NI-DCPower instrument driver to program your device in the supported ADE of your choice.

- **InstrumentStudio**—When you install NI-DCPower on a 64-bit system, you can monitor, control, and record measurements from supported devices using InstrumentStudio. InstrumentStudio is a software-based soft front panel application that allows you to perform interactive measurements on several different device types in a single program.

  InstrumentStudio is automatically installed when you install the NI-DCPower driver on a 64-bit system. You can access InstrumentStudio in any of the following ways:

  - From the Windows start menu, select **National Instruments** » **InstrumentStudio**. This launches InstrumentStudio and runs a soft front panel populated with devices detected on your system.
  - From Measurement & Automation Explorer (MAX), select a device and then click **Soft Front Panel**. This launches InstrumentStudio and runs a soft front panel for the device you selected.
- **NI-DCPower Instrument Driver** —The NI-DCPower API configures and operates the module hardware and performs basic acquisition and measurement functions.
  - LabVIEW—Available on the LabVIEW Functions palette at **Measurement I/O** » **NI-DCPower**. Examples are available from the **Start** menu in the **National Instruments** folder.
  - LabWindows/CVI—Available at **Program Files** » **IVI Foundation** » **IVI** » **Drivers** » **NI-DCPower**. LabWindows/CVI examples are available from the **Start** menu in the **National Instruments** folder.

- C/C++—Available at **Program Files » IVI Foundation » IVI**. Refer to the ***Creating an Application with NI-DCPower in Microsoft Visual C and C++*** topic of the ***NI DC Power Supplies and SMUs Help*** to manually add all required include and library files to your project. NI-DCPower does not ship with installed C/C++ examples.
- Python—For more information about installing and using Python, refer to the ***NI-DCPower Python Documentation***.

PXIe-4150 Theory of Operation

The PXIe-4150 combines a digital control loop architecture with precision electronics to constant voltage (CV) or constant current (CC) sources with built-in measurement of voltage and current output.

One significant advantage of SourceAdapt is the ability to make precise adjustments to the control loop to customize the transient response to any load, so you can achieve an ideal transient response with minimum rise times and no overshoots or oscillations.

The PXIe-4150 can operate in either CV mode or CC mode.

- In ***CV*** mode, the device acts as a precision voltage source that holds the voltage across the selected voltage sense points constant with respect to load changes as long as load current is below the programmed current limit.
- In ***CC*** mode, the device acts as a precision current source that holds the current across the load constant with respect to load changes as long as load voltage is below the programmed voltage limit.

A measurement circuit on the PXIe-4150 can simultaneously read the voltage and current values using two integrating analog-to-digital converters. Voltage is measured differentially between the HI and LO terminals (local sense) or between the Sense HI and Sense LO terminals (remote sense) based on the programmed voltage sense location. Remote sense is used to compensate for voltage drop that results from resistance in cables, connectors and switches. Current is measured using shunt resistors in series with the LO terminal.

There are several protection mechanisms built into the PXIe-4150 that guard against common faults.

The PXIe-4150 continuously monitors voltage between HI and LO or HI Sense and LO Sense and protects against overvoltage faults. If an excessive voltage is detected, the overvoltage protection (OVP) circuit opens the Output Disconnect switch to protect the PXIe-4150 from excessive over-voltage.

In the event the Sense terminals are left disconnected during remote sense operation, the 100 kΩ open-sense protection resistors provide a voltage feedback path to prevent the output voltage from saturating to a large voltage level.

The output terminals of the PXIe-4150 are electrically isolated from chassis ground through a 150 V DC, Category I isolation barrier. This allows any channel terminal to float ±150 V DC with respect to chassis ground.

The PXIe-4150 includes flexible source and measurement units that enable multiple programming modes and timing options:

- **Single Point Source Mode**—Use for software-timed source or measurement operation.
- **Sequence Source Mode**—Use for basic hardware-timed operation where the user specifies a set of setpoint steps and source delays between each step while other parameters are held constant.
- **Advanced Sequencing Mode**—Use for hardware-timed operation where full control of all the supported parameters is available for each step.

You can use hardware triggers in all modes to control operation of the source and measure units with other channels or devices in the system. The measurement engine operation can operate in waveform acquisition mode and can be decoupled from the sequence engine. Refer to ***Sourcing Voltage and Current*** for more information about triggerable events in each programming mode.

Related concepts:

- Sourcing Voltage and Current

Block Diagram

The following diagram illustrates the design of the PXIe-4150.

PXIe-4150 Block Diagram

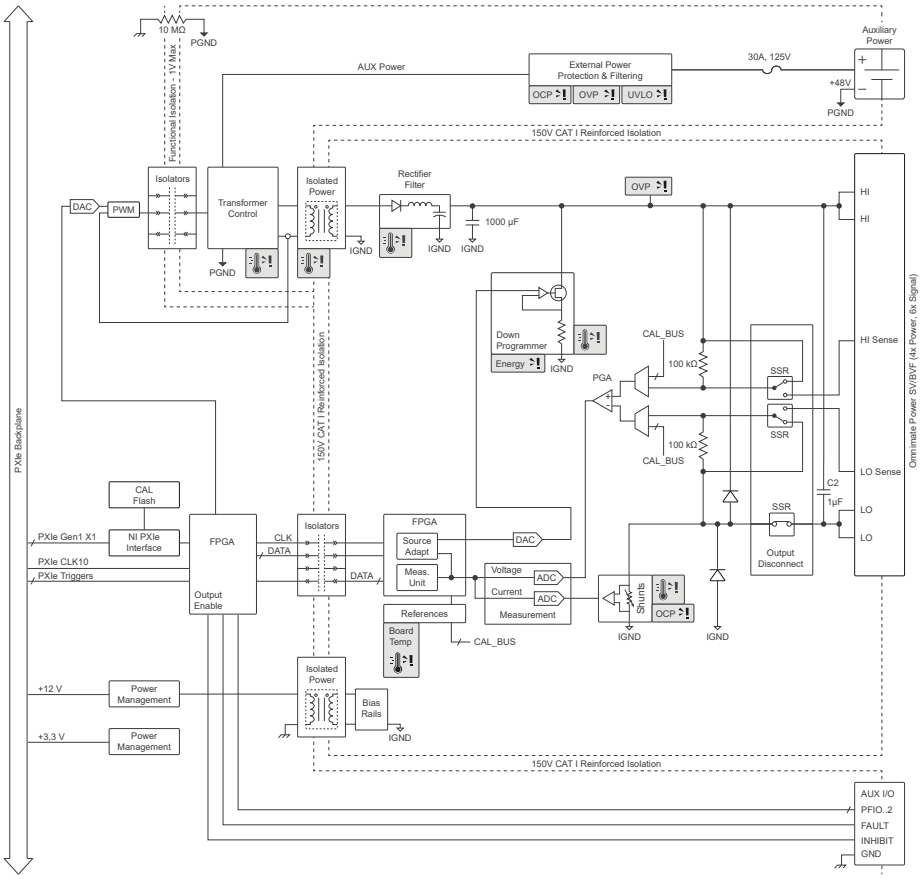

Legend

Error Monitor | Chassis / Non Isolated GND | Isolated GND | Aux Power GND | Reported Temperature Sensor

PXIe-4150 Front Panel

Figure 6. PXIe-4150 Front Panel

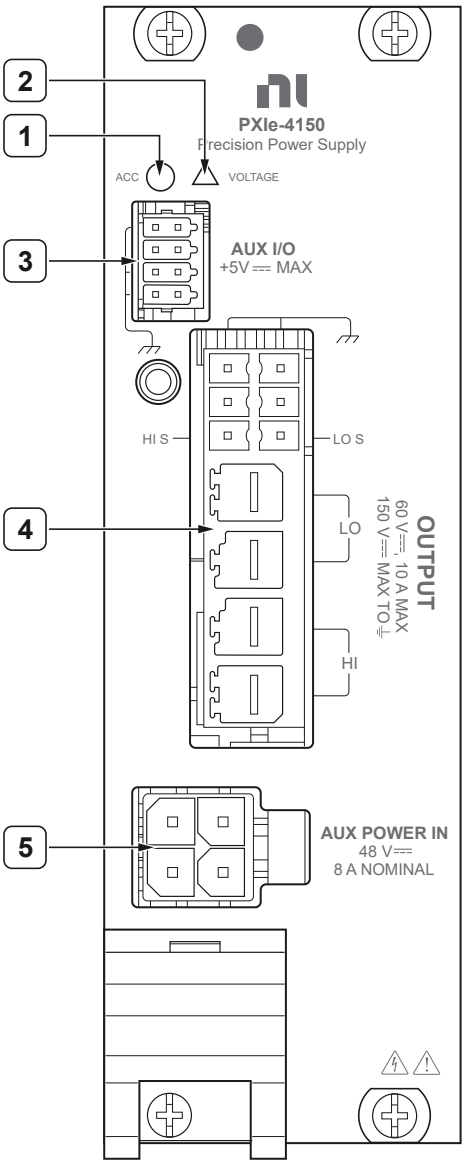

Table 8. Front Panel Descriptions

Front Panel Area		Description
1	Access LED	Indicates module power and access status.
2	Voltage LED	Indicates the module output channel state.
3	AUX I/O Connector	PFI trigger I/O and Fault status output connections.
4	Output I/O Connector	Primary output connection for output source and voltage

Front Panel Area		Description
		sense.
5	AUX Power In Connector	Auxiliary power connector.

Note For more information on LED indicators, refer to ***PXIe-4150 LED Indicators***. For more information on pins, refer to the ***PXIe-4150 Pinout***.

Related reference:

- PXIe-4150 LED Indicators
- PXIe-4150 Pinout

PXIe-4150 Pinout

The following figures display the terminals on the PXIe-4150 connector.

Output Connector

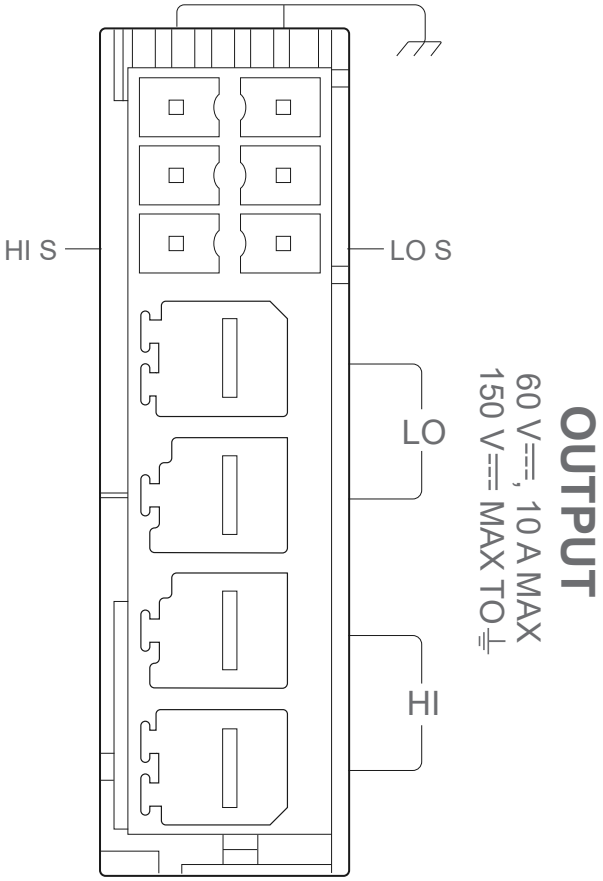

Table 9. Output Connector Pin Descriptions

Pin	Description
HI terminal	HI force terminal connected to channel power stage (generates and/or dissipates power). Positive polarity is defined as voltage measured on HI > LO.
LO terminal	LO force terminal connected to channel power stage (generates and/or dissipates power). Positive polarity is defined as voltage measured on HI > LO.

Pin	Description
HI S terminal	Voltage remote sense input terminals. Used to compensate for I x R voltage drops in cable leads, connectors, and switches.
LO S terminal	
GND ( ) terminals	Tied to chassis ground through module front panel. Use for connections to cable shields. Do not use for grounding the LO force terminal due to pin current rating.

AUX I/O Connector

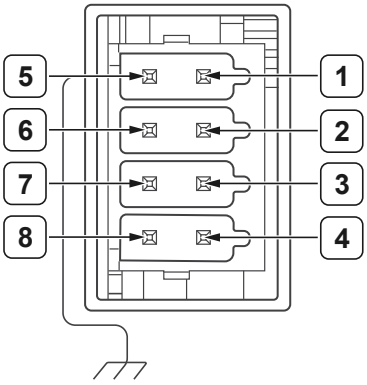

Table 10. AUX I/O Connector Pin Descriptions

Pin		Descriptions
1	PFI 0	Programmable Function Interface for digital timing and triggering.
2	PFI 1	
3	FAULT	Device fault status output.
4	INHIBIT	Forces the PXIe-4150 output to an inhibited state when not shorted to ground. You can short this pin to ground using the pre-installed jumper to enable normal operation.
5	GND	Ground reference for AUX I/O.
6	PFI 2	Programmable Function Interface for digital timing and triggering.
7	GND	Ground reference for AUX I/O.
8	GND	

AUX Power In Connector

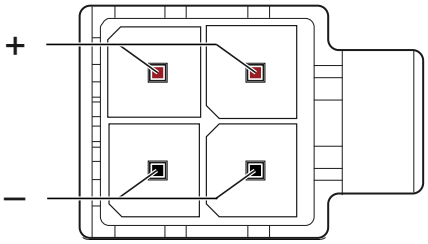

Table 11. AUX Power In Pin Descriptions

Signal	Descriptions
+	Positive Auxiliary Power Input
-	Negative Auxiliary Power Input

Related concepts:

- INHIBIT Pin

Related tasks:

- Installing the Auxiliary 48 V Power Source on the PXIe-4150

PXIe-4150 LED Indicators

The PXIe-4150 features an Access LED and Voltage LED.

Access LED

The Access LED, located on the module front panel, indicates module power and access.

The following table lists the Access LED states.

Table 12. Access LED Indicator Status

Status Indicator	Device State
(Off)	Not Powered
Green	Powered
Amber	Device is being accessed

Why Is the Access LED Off When the Chassis Is On?

The LEDs may not light until the module has been configured in Hardware Configuration Utility or MAX. Before proceeding, verify that the PXIe-4150 appears in Hardware Configuration Utility or MAX.

If the Access LED fails to light after you power on the chassis, a problem may exist with the chassis power rails, a hardware module, or the LED.

> **Notice** Apply external signals only while the PXIe-4150 is powered on. Applying external signals while the module is powered off may cause damage.

1. Disconnect any signals from the module front panel.
2. Power off the chassis.
3. Remove the module from the chassis and inspect it for damage.

> **Notice** Do not reinstall a damaged module.

4. Install the module in a different, supported slot within the same PXI chassis.
5. Power on the chassis.

> **Note** If you are using a PC with a device for PXI remote control system, power on the chassis before powering on the computer.

6. Verify that the module appears in Hardware Configuration Utility or MAX.
7. Reset the module in Hardware Configuration Utility or MAX and perform a self-test.

Voltage LED

The Voltage LED on the module front panel indicates the output channel state.

The following table lists the Voltage LED states.

Table 13. LED Voltage Status Indicator

Status Indicator	Output Channel State
(Off)	The device output is disconnected from the voltage generation source through output disconnect relays.
Green	The device output is connected to the voltage generation source and <42.4 V DC is present.
Amber	The device output is connected to the voltage generation source and ≥42.4 V DC is present. High voltage may be generated by the device itself or an external device.
Red	The device has a fault or is in error due to the voltage generated or measured by the device. Refer to the driver software for possible sources. The device will not operate until the error is cleared and/or the device is reset. High voltage may be present on the device.
Blinking Green	The device output is in an inhibited state because the INHIBIT pin is not shorted to ground. You must short the INHIBIT pin to ground to restore normal operation. **Note** If ≥42.4 V DC is present, the LED shines solid amber regardless of the INHIBIT pin state.

Related concepts:

- INHIBIT Pin

PXIe-4150 Installation and Configuration

Complete the following steps to install the PXIe-4150 into a chassis and prepare it for use.

1. Unpacking the Kit
2. Installing the Software
3. Installing the PXIe-4150 into a Chassis
4. Installing the Auxiliary 48 V Power Source on the PXIe-4150
5. Selecting an Output Accessory for Your Application
6. Verifying the Installation in MAX
7. Configuring the PXIe-4150 in Hardware Configuration Utility
   NI recommends using Hardware Configuration Utility to perform initial hardware configuration.
8. What Should I Do if the PXIe-4150 Fails the Self-Test?
9. Self-Calibrating the PXIe-4150 in MAX
10. Inhibit Mode

Unpacking the Kit

Notice To prevent electrostatic discharge (ESD) from damaging the device, ground yourself using a grounding strap or by holding a grounded object, such as your computer chassis.

1. Touch the antistatic package to a metal part of the computer chassis.
2. Remove the device from the package and inspect the device for loose components or any other sign of damage.

   Notice Never touch the exposed pins of connectors.

   Note Do not install a device if it appears damaged in any way.

3. Unpack any other items and documentation from the kit.

Note Store the device in the antistatic package when the device is not in use.

Kit Contents

Refer to the following figure to identify the contents of the PXIe-4150 kit.

Figure 7. PXIe-4150 Kit Contents

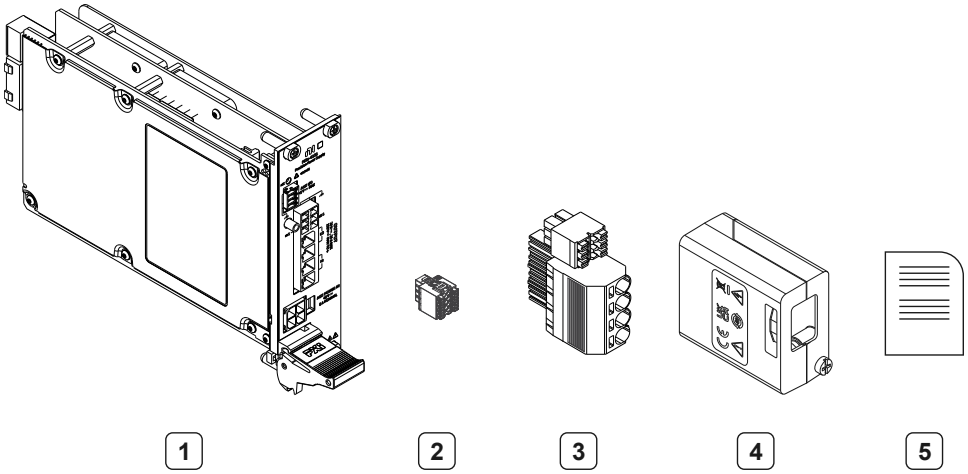

1. PXIe-4150 Module
2. AUX I/O Connector
3. OUTPUT Connector
4. Backshell Assembly
5. Documentation

Installing the Software

You must be an Administrator to install NI software on your computer.

1. Install an ADE, such as LabVIEW or LabWindows™/CVI™.
2. Download the driver software installer from ni.com/downloads.
   Package Manager downloads with the driver software to handle the installation. Refer to the Package Manager Manual for more information about installing, removing, and upgrading NI software using Package Manager.
3. Follow the instructions in the installation prompts.

   Note Windows users may see access and security messages during

> installation. Accept the prompts to complete the installation.

4. When the installer completes, select **Restart** in the dialog box that prompts you to restart, shut down, or restart later.

Installing the PXIe-4150 into a Chassis

> **Notice** To prevent damage to the PXIe-4150 caused by ESD or contamination, handle the module using the edges or the metal bracket.

1. Ensure the AC power source is connected to the chassis before installing the module.
   The AC power cord grounds the chassis and protects it from electrical damage while you install the module.
2. Power off the chassis.
3. Inspect the slot pins on the chassis backplane for any bends or damage prior to installation. Do not install a module if the backplane is damaged.
4. Position the chassis so that inlet and outlet vents are not obstructed.
   For more information about optimal chassis positioning, refer to the chassis documentation.
5. Remove the black plastic covers from all the captive screws on the module front panel.
6. Identify a supported slot in the chassis. The PXIe-4150 module can be placed in PXI Express hybrid peripheral slots (●H), PXI Express system timing slots (▣), or PXI Express peripheral slots (●).
7. Touch any metal part of the chassis to discharge static electricity.
8. Ensure that the ejector handle is in the downward (unlatched) position.

Figure 8. Module Installation

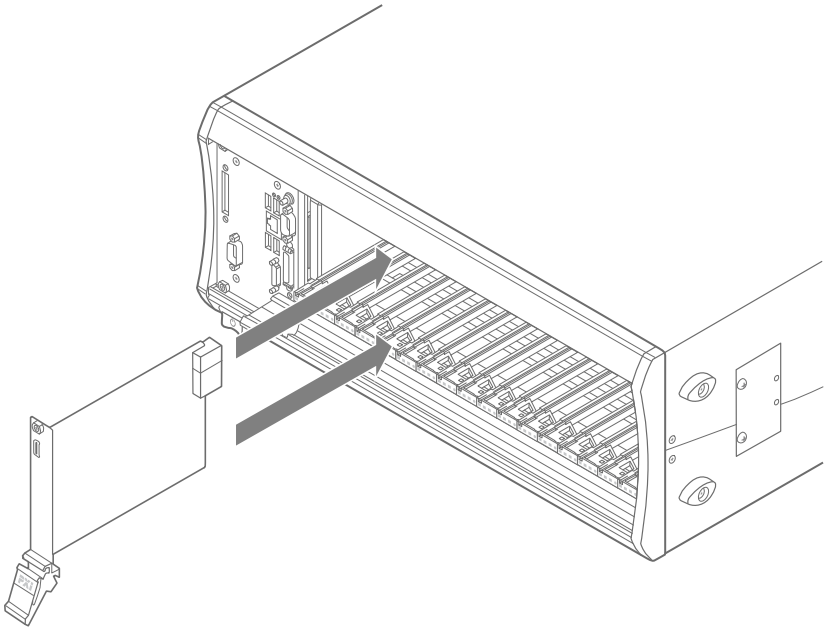

9. Place the module edges into the module guides at the top and bottom of the chassis. Slide the module into the slot until it is fully inserted.
10. Latch the module in place by pulling up on the ejector handle.
11. Secure the module front panel to the chassis using the front-panel mounting screws.

> **Note** Tightening the top and bottom mounting screws increases mechanical stability and also electrically connects the front panel to the chassis, which can improve the signal quality and electromagnetic performance.

12. Cover all empty slots using either filler panels (standard or EMC) or slot blockers with filler panels, depending on your application.

> **Note** For more information about installing slot blockers and filler panels, go to ni.com/r/pxiblocker.

Installing the Auxiliary 48 V Power Source on the PXIe-4150

Complete the following steps to install the auxiliary 48 V power source on the PXIe-4150 and prepare it for use.

1. Connect the power source to the auxiliary power input connector on the PXIe-4150 front panel using a 6-pos to 4-pos cable rated for ≥60 V/≥15 A. Refer to the AUX I/O Connector pinout in the PXIe-4150 Pinouts topic for more information.
2. Tighten the screws to hold the auxiliary 48 V power source in place.

> **Note** An auxiliary 48 V power source is required to operate the PXIe-4150. NI recommends using a power source that is greater than 9 A. The auxiliary power source provided by NI uses sufficient wire gauge to maintain voltage requirements for the device. If you use a third-party auxiliary power source, you must use the appropriate wire gauge to ensure that it can provide the required device current without dropping below the minimum voltage at the auxiliary power input connector

Related concepts:

- Using Auxiliary Power with the PXIe-4150

Related reference:

- PXIe-4150 Pinout

Selecting an Output Accessory for Your Application

The PXIe-4150 offers two output accessories that can be attached to the front panel connector:

- **AUX I/O Connector**—This input connector ships with the PXIe-4150.
- **Output Connector**—This output connector ships with the PXIe-4150.

Installing the Output Connector Assembly and Backshell Assembly onto the PXIe-4150

PXIe-4150 Output Connector Preparation

> **Note** NI recommends a 0.6 x 3.5 screwdriver blade (blade standard DIN 5264).

1. Open the clamping unit by pressing the screwdriver into the appropriate opening until the spring is completely opened.

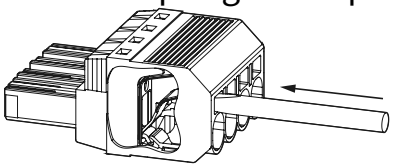

2. Connect the conductor by plugging in the conductor into the clamping unit up to the end stop.

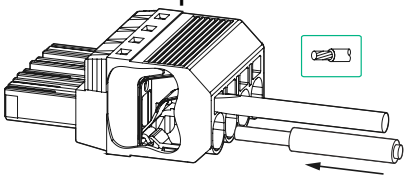

3. Close the clamping unit by removing the screwdriver from the opening.

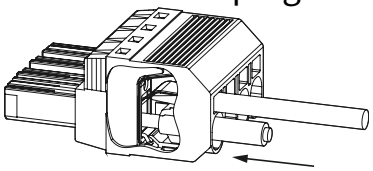

4. Ensure the conductor is inserted up to the end stop by pulling gently on the conductors.

HI Sense, LO Sense, and Shield GND Connections (Flexible/Stranded Conductors)

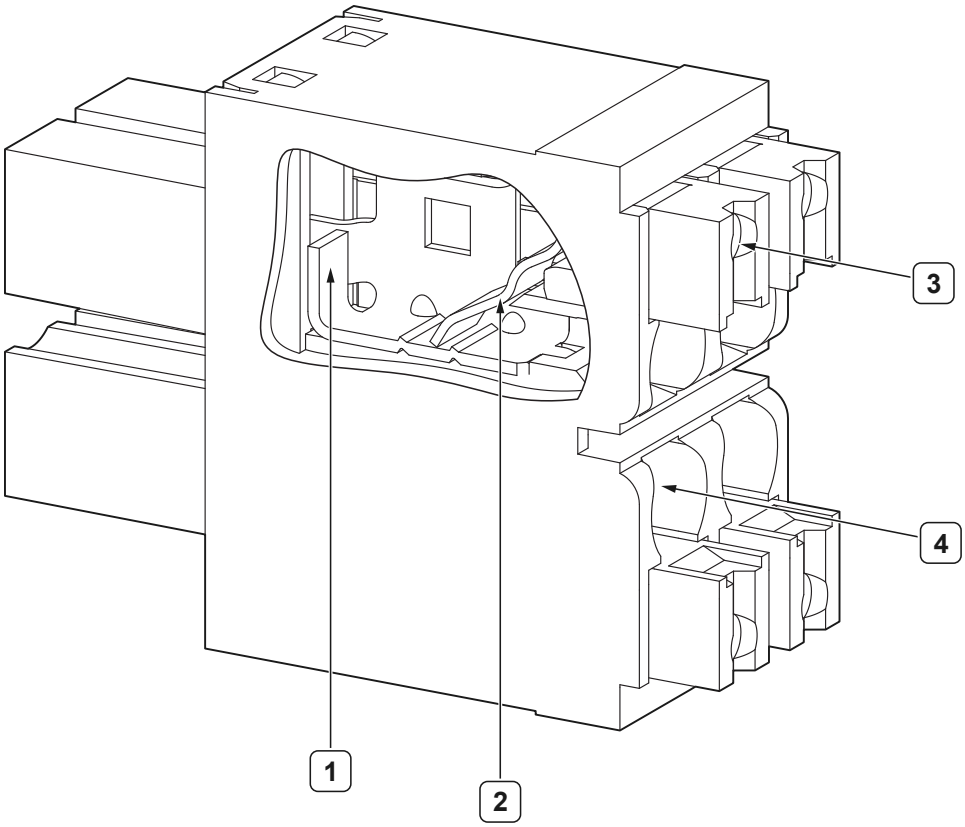

Part	Name
1	End stop
2	Spring clamp
3	Push-button (slider/pusher)
4	Conductor entry

Note NI recommends a 0.4 x 2.5 screwdriver blade (blade standard DIN 5264).

1. Open the contact point by pressing the push-button (slider/pusher).

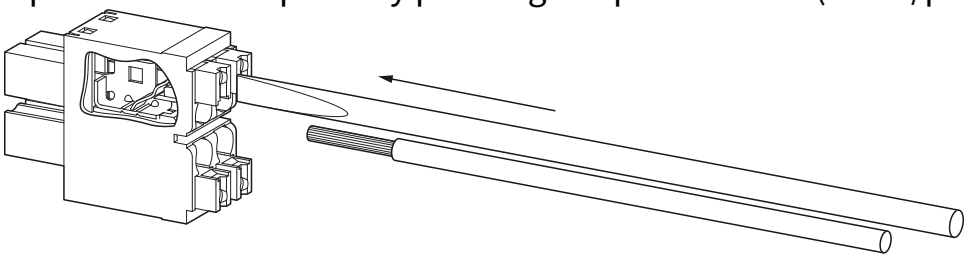

2. Insert the stranded conductors without the crimped-on wire-end ferrules.

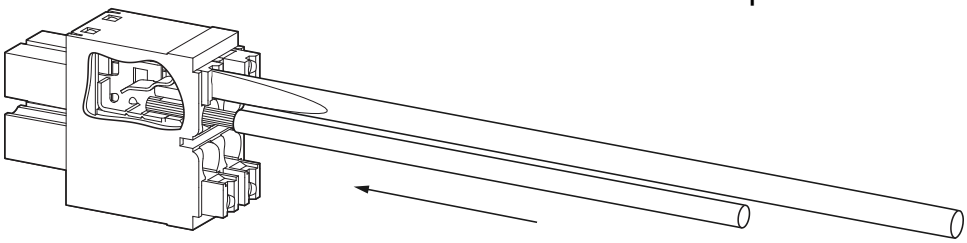

3. Remove the tool from the push-button (slider/pusher).

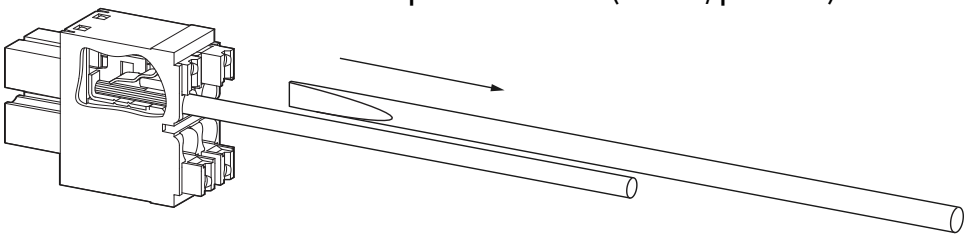

4. Verify that the conductor cannot be pulled out.

HI Sense, LO Sense, and Shield GND Connections (Solid Conductors)

1. Plug a stripped solid conductor into the contact point up to the end stop.

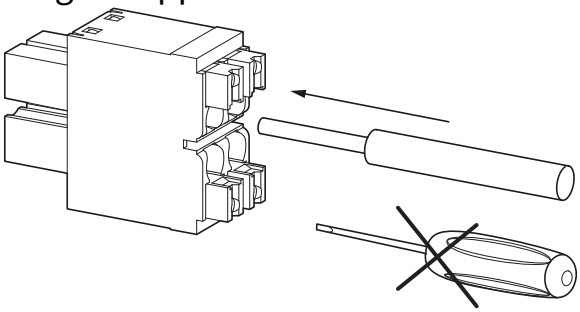

2. Verify that the conductor cannot be pulled out.

HI Sense, LO Sense, and Shield GND Connections (Conductors with Wire-end Ferrules)

1. Plug a stranded conductor with a crimped-on wire-end ferrules, with or without plastic collars, into the contact point up to the end stop.

> **Note** When plugging-in, an initial resistance (spring clamp) has to be overcome.

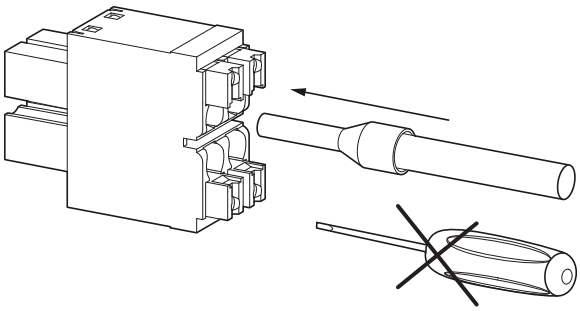

2. Verify that the conductor cannot be pulled out.

HI and LO Connections (Solid Conductors / Conductors with Wire-end Ferrules)

1. Plug in the conductor into the clamping unit up to the end stop.

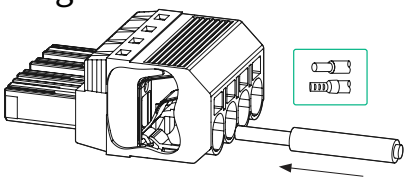

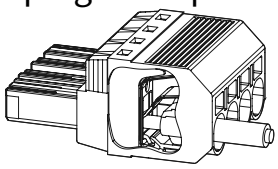

2. Ensure the conductor is inserted up to the end stop by pulling gently on the conductors.

Backshell Assembly Preparation

Prepare the output connector and cable to ensure proper grounding and install the output connector assembly onto the PXIe-4051.

1. Insert a HI, LO, Hi Sense, LO Sense, and Drain Wire cable into the appropriate terminals.

> **Note** For more information on proper wiring, refer to the device user manual.

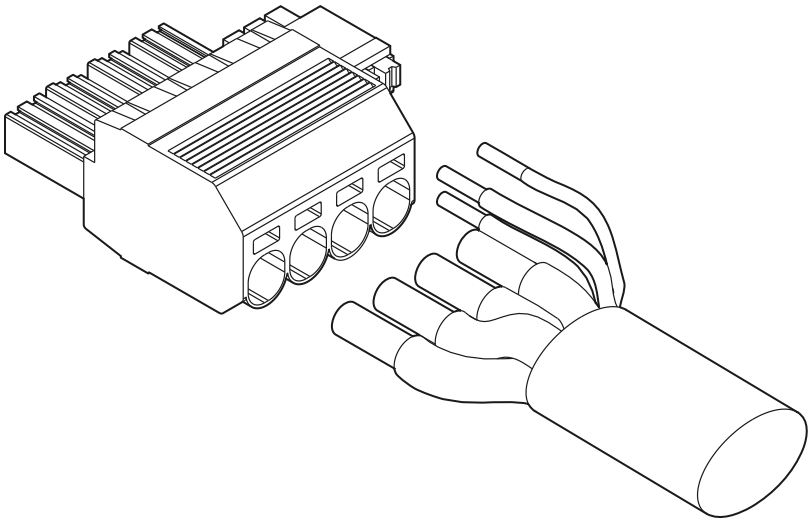

2. Open the backshell assembly by removing the cover screw.

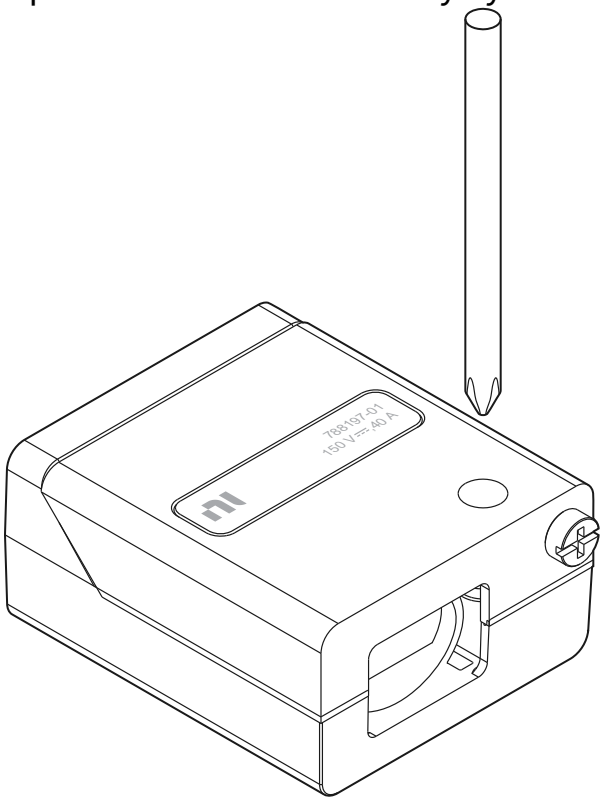

3. Remove the backshell top cover and insert a cable tie to the backshell bottom cover.

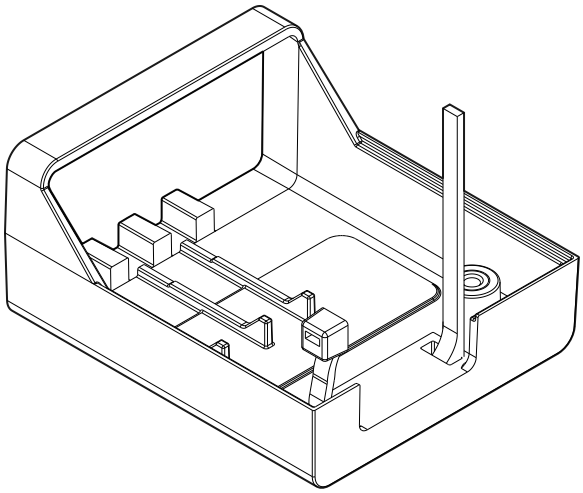

4. Place the assembled output plug into the backshell.

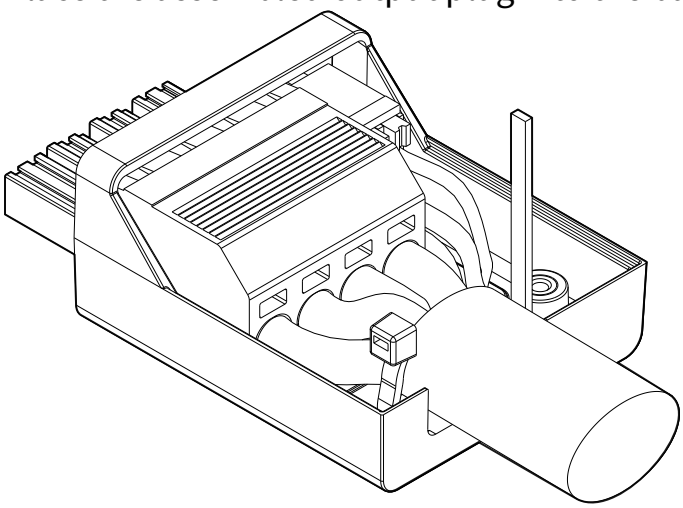

5. Tighten the cable tie.

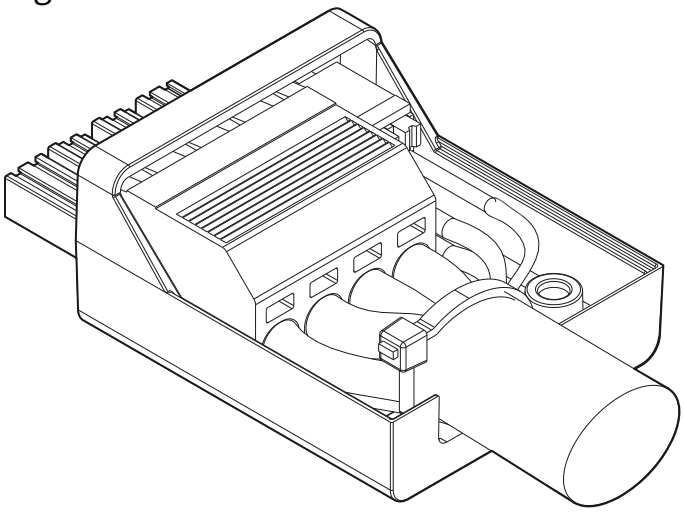

6. Reinstall the top cover and tighten the captive top-cover screws to a torque of 0.3

N · m (2.7 lb. · in.).

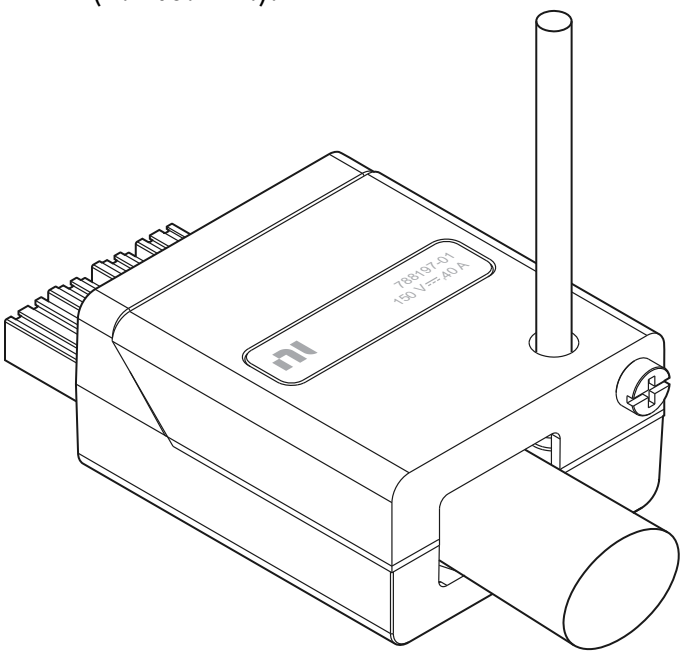

7. Insert the backshell assembly into the connector on the front panel.
8. Fasten the backshell to the device by tightening the jackscrew on the output connector assembly to a torque of 0.3 N · m (2.7 lb. · in.).

Installing the Output and AUX I/O Connector on the PXIe-4150

Complete the following steps to install the output connector assembly with a module and prepare signal connections.

1. Ensure the AC power source is connected to the chassis.

> **Note** The AC power cord grounds the chassis and protects it from electrical damage.

2. Power off the chassis.
3. Touch any metal part of the chassis to discharge static electricity.
4. Slide the accessory plug into the corresponding jack on the front panel of the module until it is fully inserted.

Figure 10. Output and AUX I/O Connector Installation with a PXIe-4150

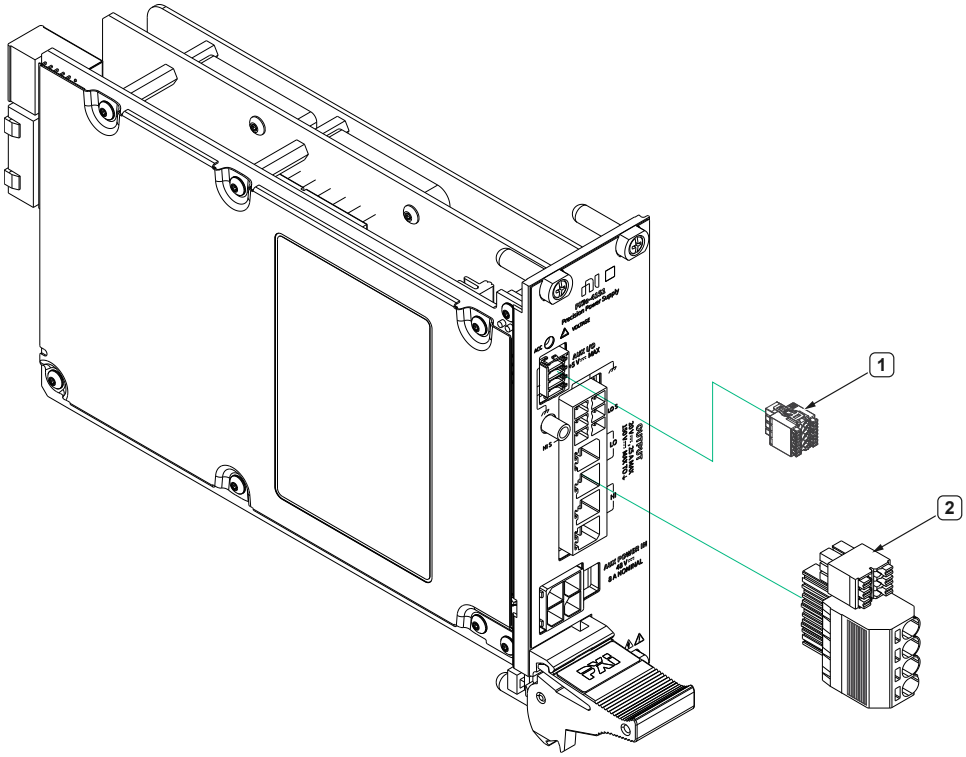

1. AUX I/O Connector
2. OUTPUT Connector

Figure 11. Output Connector Front Panel

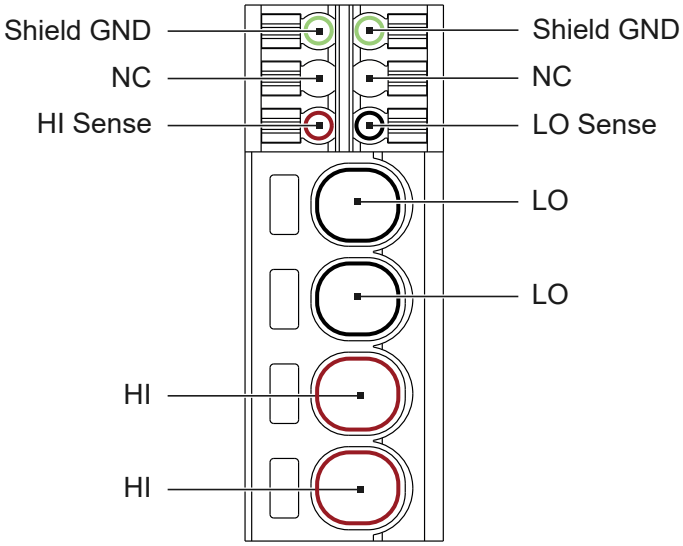

Signal Name	Description
HI	HI force terminal connected to channel power stage (generates and/or dissipates power).

Signal Name	Description
	Positive polarity is defined as voltage measured on HI > LO.
LO	LO force terminal connected to channel power stage (generates and/or dissipates power). Positive polarity is defined as voltage measured on HI > LO.
HI Sense	Voltage remote sense input terminals. Used to compensate for I x R voltage drops in cable leads, connectors, and switches.
LO Sense	
Shield GND	Chassis grounding.

AUX I/O Connector Front Panel

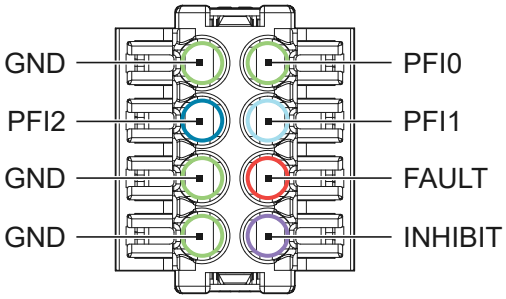

Signal Name	Description
GND	Ground reference for AUX I/O.
PFI <0 , 1 , 2>	Programmable Function Interface for digital timing and triggering.
FAULT	Device fault status output.
INHIBIT	Forces the PXIe-4150 output to an inhibited state when not shorted to ground. You can short this pin to ground using the pre-installed jumper to enable normal operation.

Verifying the Installation in MAX

Use Measurement & Automation Explorer (MAX) to configure your NI hardware. MAX informs other programs about which NI hardware products are in the system and how

they are configured. MAX is automatically installed with NI-DCPower.

> **Note** The PXIe-4150 appears in MAX as `NI PXIe-4150`.

1. Launch MAX.
2. In the configuration tree, expand **Devices and Interfaces** to see the list of installed NI hardware.
   Installed modules appear under the name of their associated chassis.
3. Expand your **Chassis** tree item.
   MAX lists all modules installed in the chassis. Your default names may vary.

   > **Note** If you do not see your module listed, press <F5> to refresh the list of installed modules. If the module is still not listed, power off the system, ensure the module is correctly installed, and restart.

4. Record the identifier MAX assigns to the hardware. Use this identifier when programming the PXIe-4150.
5. Self-test the hardware by selecting the item in the configuration tree and clicking **Self-Test** in the MAX toolbar.
   MAX self-test performs a basic verification of hardware resources.

What Should I Do if the PXIe-4150 Does Not Appear in MAX?

1. In the MAX configuration tree, expand **Devices and Interfaces**.
2. Expand the **Chassis** tree to see the list of installed hardware, and press <F5> to refresh the list.
3. If the module is still not listed, power off the system, ensure that all hardware is correctly installed, and restart the system.
4. Navigate to the Device Manager by right-clicking the Start button, and selecting **Device Manager**.
5. Verify the PXIe-4150 appears in the Device Manager.
   a. Under an NI entry, confirm that a PXIe-4150 entry appears.

   > **Note** If you are using a PC with a device for PXI remote control system, under **System Devices**, also confirm that no error conditions appear for the **PCI-to-PCI Bridge**.

b. If error conditions appear, reinstall NI-DCPower.

Configuring the PXIe-4150 in Hardware Configuration Utility

NI recommends using Hardware Configuration Utility to perform initial hardware configuration.

1. Open Hardware Configuration Utility.
   The PXIe-4150 should appear in the system pane automatically.
2. Record the name Hardware Configuration Utility assigns to the PXIe-4150 or, if desired, provide a custom name to the PXIe-4150.
   Use this name when programming the PXIe-4150.
3. Validate that your instrument is installed correctly:
   a. Select the PXIe-4150 module in the system pane and expand the **Troubleshooting** area of the configuration pane.
   b. Click **Self-test**.
   Hardware Configuration Utility reports when the hardware setup is validated.

What Should I Do if the PXIe-4150 Fails the Self-Test?

1. Reset the PXIe-4150 through Hardware Configuration Utility or MAX and then perform the self-test again.
2. Confirm that 48 V auxiliary power is connected to the PXIe-4150 and powered on, reset the PXIe-4150, and then perform the self-test again.
3. Restart the system, and then perform the self-test again.
4. Power off the chassis.
5. Reinstall the failed module in a different slot.
6. Power on the chassis.
7. Perform the self-test again.

Self-Calibrating the PXIe-4150 in MAX

Self-calibration adjusts the PXIe-4150 for variations in the module environment. The PXIe-4150 modules are externally calibrated at the factory. However, you should

perform a complete self-calibration after you install the module.

> **Note** The only supported values for the `Self Calibration Persistence` property and the `NIDCPOWER_ATTR_SELF_CALIBRATION_PERSISTENCE` attribute are **Write to EEPROM** and `NIDCPOWER_ATTR_VAL_WRITE_TO_EEPROM`, respectively. This setting saves the calibration data to the onboard EEPROM, so the corrections survive power cycling and device resetting. Because EEPROM has a limited number of write cycles, NI recommends that you save your self-calibration data to EEPROM no more than once per day.

1. Install the PXIe-4150 and let it warm up for the recommended warm-up time listed in the ***PXIe-4150 Specifications***.

   > **Note** Warm up begins when the PXI chassis has been powered on and the operating system has completely loaded.

2. Self-calibrate the PXIe-4150 by clicking the **Self-Calibrate** button in MAX or calling `niDCPower Cal Self Calibrate` VI (`niDCPower_CalSelfCalibrate`).

   > **Note** Low energy transients can appear at the output terminals of your PXIe-4150 during certain situations, such as power-up, power-down, device driver loading, and self-calibration.

Inhibit Mode

The APS-4158/4159 supports operation in two inhibit modes. Default mode is used when normal power inhibit button functionality is desired. In Default mode, when a system controller is installed in slot 1 of the chassis, the user can press the power inhibit button to power on the chassis.

> **Note** In Default mode, you can also power on the chassis without a system controller installed in slot 1. To power on the chassis from standby, press and

hold the power inhibit button for 4 seconds. To power off the chassis, again press and hold the power inhibit button for 4 seconds.

Manual mode is used when you would like to manually control the inhibit state of the module. In Manual mode, driving the Remote Inhibit signal high or floating it will cause the module to be powered on. Driving the Remote Inhibit signal low or shorting it to ground will cause main power to be inhibited.

Note The Timing and Synchronization upgrade is required for access to the Remote Inhibit signal. Without this upgrade, a module in Manual mode will always be powered on when AC power is connected.

Inhibit Mode Selection

You can select the chassis Inhibit Mode using Measurement & Automation Explorer (MAX). Refer to the ***Inhibit Mode Configuration in MAX*** section for more information.

You also can select the chassis Inhibit Mode on the PXIe-4150 chassis using a DIP switch on the backplane. Refer to the ***DIP Switches*** section for more information about DIP switch settings. Refer to Front View of the PXIe-1095 for the switch location.

Note The DIP switch must be in the Default position for software configuration in MAX to work. If the DIP switch is in the Manual position, the Inhibit Mode will be Manual regardless of the software setting.

Using Auxiliary Power with the PXIe-4150

To achieve the optimum power output from the PXI system and accommodate the power demand for applications, you must use an auxiliary 48 V power source with the PXIe-4150. This section provides information on determining the power needs and using auxiliary power for your applications.

Refer to the following topics for more information on auxiliary power requirements with the PXIe-4150.

Related tasks:

- Installing the Auxiliary 48 V Power Source on the PXIe-4150

Related information:

- APS-4158/4159 User Manual
- APS-4158/4159 Specifications

Power Budgeting

Use these guidelines to determine which auxiliary power supply your system requires.

The number of PXIe-4150 modules in your system determines the type of auxiliary power source your application requires. For a system with only up to two PXIe-4150 modules, NI recommends the APS-4157 to supply auxiliary power. For systems with three or more PXIe-4150 modules, NI recommends the APS-4158/4159 for a more compact and streamlined auxiliary power solution. You may also use a 48 V auxiliary power supply with equivalent specifications

The PXIe-4150 power stage is also comprised of several elements that you must consider when determining the total power requirements for your application:

- ***Delivered Power***—Power delivered to the DUT.
- ***Bias Power***—Base level power draw needed to run the power stage. For the PXIe-4150, ***Bias Power*** = 30 W.

- ***Power Losses***—Losses incurred by the power stage.
- ***Transient Power***—Slewing between setpoints with large capacitive loads requires extra energy to charge up the capacitors. For the PXIe-4150, ***Transient Power*** = 30 W.

The sum of all these power stage elements gives us the power requirements for the PXIe-4150 module.

Power.Required = ***Bias Power*** + ***Transient Power*** + ***Delivered Power*** / ***Efficiency***

where

- ***Power.Required*** is the power required from the auxiliary power supply for your application.
- ***Efficiency*** is the ratio of power delivered versus power consumed from the AUX power supply. For the For the PXIe-4150, ***Efficiency*** = 85%.

For example, if a system has three PXIe-4150 modules with a maximum use case of 20 V/7 A per module:

- ***Power.Required*** = 30 W + 30 W + (20 V * 7 A) / 0.85 = 225 W
- ***Power.System*** = 225 W * 3 = 775 W

With these calculations, this system requires an APS-4158/4159 or equivalent auxiliary power supply.

Connecting Signals to the PXIe-4150

Refer to the following topics for guidance about PXIe-4150 signal connections.

- Use the + and - terminals for local sense measurements.
- Use the +, -, Sense +, and Sense - terminals for remote sense measurements.

Making Local Sense Measurements

Local sense measurements use a single set of leads for output and voltage measurement.

Figure 12. Connecting Signals for Local Sense Measurement

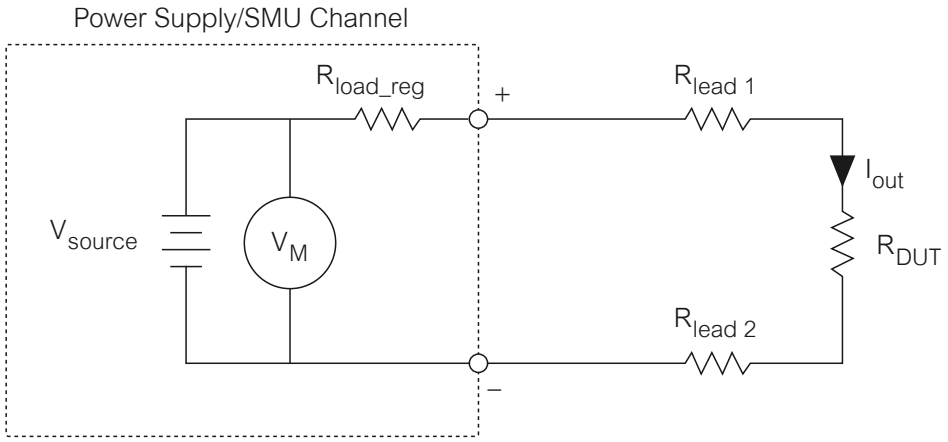

When the PXIe-4150 is operating in Constant Voltage mode, local sense forces the requested voltage at the output terminals of the module. The actual voltage at the DUT terminals is lower than the requested output because of the output lead resistance error.

The error in the DUT voltage measurement is due to the output current, the output resistance of the source (specified as voltage load regulation), and the resistance of the leads used to connect the power supply to the load. This error can be calculated using the following equation:

Local Sense Error (Volts) = $I_{out}(R_{lead1} + R_{lead2} + R_{out.source})$

The output resistance of the source typically includes the effective resistance of protection circuitry in series with the sourcing path, and is usually negligible in comparison to external resistance. However, for high-current applications, you may notice the resistance of the protection circuitry. Use remote sense measurements for high-current applications.

Making Remote Sense Measurements

Remote source measurements, sometimes referred to as 4-wire sense, require 4-wire connections to the DUT (and 4-wire switches if a switching system is used to expand the channel count). In a remote sense configuration, one set of leads carries the output current, while another set of leads measures voltage directly at the DUT terminals.

Figure 13. Connecting for a Remote Sense Measurement

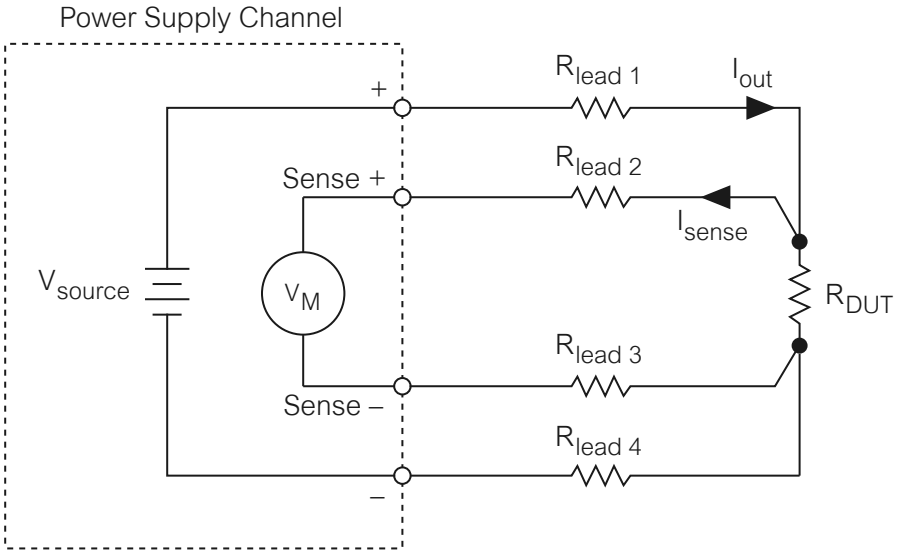

Tip Using remote sense enables more accurate voltage output and measurements when the output lead voltage drop is significant.

Although the current flowing in the output leads can be several amps or more, depending on the instrument, a very small amount of current flows through the sense leads. This results in a much smaller voltage drop error for measurements versus the local sense error. When using remote sense in the DC Voltage output function, the output voltage is forced at the end of the sense leads instead of the output terminals. When using remote sense in the DC Current output function, the voltage limit is measured at the end of the sense leads instead of at the output terminals. Using

remote sense results in a voltage at the DUT terminals that is more accurate than what can be achieved using local sense. Ideally, the sense leads should be connected as close to the DUT terminals as possible.

When using remote sense, remember that the magnitude of the voltage drop across the higher current output leads is usually limited to one or two volts per lead, depending on the power supply. When attempting to force a voltage using the DC Voltage output function, dropping more voltage across the output leads than the specified maximum in remote sense mode may result in a voltage at the load that is less than the requested level.

> **Notice** When attempting to force a current using the DC Current output function while using either local or remote sense, excessive line drop may force the power supply into Constant Voltage mode before the requested current level can be reached.

Configuring a channel for remote sense operation without connecting the sense leads to the DUT can result in measurements that do not meet the published specifications. If a channel is configured for remote sense and the remote sense leads are left open, the channel may source a voltage higher than the voltage level or voltage limit.

Refer to the ***PXIe-4150 Specifications*** for more information about remote sense support and the maximum output lead voltage drop allowed.

The PXIe-4150 features internal open-sense protection through a 100 kΩ resistor between the force (+/-) and sense (Sense +/-) lines. This protection provides a secondary measurement path to maintain the instrument output in regulation if remote sense becomes disconnected.

Minimizing Voltage Drop Loss when Cabling

Voltage drop loss is introduced by the cabling wires that connect the module (SMU, power supply, or electronic load) to the DUT.

The voltage drop due to I*R loss is determined by the resistance of the cabling wire (a property of the wire gauge and length) and the amount of current flowing through the

wire. Modules with remote sense capabilities can compensate for voltage drop by measuring the voltage across the load terminals with a second set of leads that do not carry a significant current.

To minimize voltage drop caused by cabling:

- Keep each wire pair as short as possible
- Use the thickest wire gauge appropriate for your application. NI recommends 18 AWG or lower.

To reduce noise picked up by the cables that connect the module to a load, twist each wire pair. Refer to the following table to determine the wire gauge appropriate for your application.

Caution Use wire that is thick enough to avoid overheating if the output current from the module or DUT were to short circuit.

Table 15. Typical Wire Gauge Resistance

AWG Rating	mΩ/m (mΩ/ft)
10	3.3 (1.0)
12	5.2 (1.6)
14	8.3 (2.5)
16	13.2 (4.0)
18	21.0 (6.4)
20	33.5 (10.2)
22	52.8 (16.1)
24	84.3 (25.7)
26	133.9 (40.8)
28	212.9 (64.9)

Calculating Voltage Drop

When cabling a module to the DUT, be sure to account for voltage drop in your

application. Remote voltage sense is the recommended method to compensate for the effects of force lead voltage drop. A negative simulated output resistance can be applied on modules that support the programmable output resistance feature. On modules that do not support these features programming a higher voltage level/limit may be a viable mechanism for compensating for lead voltage drop in some use cases.

Use the amount of current flowing through the cabling wires and the resistance of the wires to calculate the total voltage drop for each load, as shown in the following example:

Operating within the recommended current rating, determine the maximum voltage drop across a 1 m, 16 AWG wire carrying 1 A:

$V = \boldsymbol{I} \times \boldsymbol{R}$

$V = 1\ A \times (13.2\ m\Omega/m \times 1\ m)$

$V = 13.2\ mV$

PXIe-4150 Operating Guidelines

Refer to the following sections for information about PXIe-4150 features and guidelines for operating the PXIe-4150.

Sourcing and Sinking

The terms sourcing and sinking describe power flow into and out of a device, respectively. The PXIe-4150 is capable of only sourcing power and not sinking power.

Devices that are sourcing power are delivering power into a load, while devices that are sinking power behave like a load, absorbing power that is being driven into them and providing a return path for current.

A battery is one example of a device that is capable of both sourcing and sinking power. During the charging process, the battery acts as a power sink by drawing current from the charging circuit. After it has been removed from the charger and installed into an electronic device, the battery begins to act as a source that delivers power to a load.

The following quadrant diagram graphically represents whether a particular channel is sourcing or sinking power. Quadrants consist of the various combinations of positive and negative currents and voltages. Quadrants I and III represent sourcing power, while Quadrants II and IV represent sinking power. The PXIe-4150 operates only in the Quadrant I region.

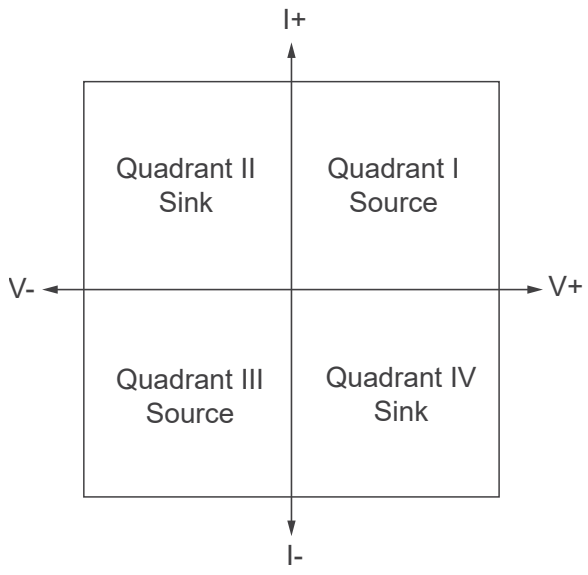

For example, when you have a positive voltage and current flowing out of the positive terminal (that is, a positive current), the output operation falls within Quadrant I and is sourcing power. When you have a positive voltage and a current flowing into the positive terminal (that is, a negative current), the output operation falls within Quadrant IV, and is sinking power.

A single-quadrant channel on a power supply can operate only in one quadrant. For example, while the PXI-4110 has multiple channels capable of sourcing power in either Quadrant I or Quadrant III, individually, each channel on the PXI-4110 can operate only within one quadrant (channels 0 and 1 operate only within Quadrant I, and channel 2 operates only within Quadrant III). Thus, all channels on the PXI-4110 are single-quadrant supplies.

Devices that are capable of sourcing power in both Quadrant I and III are sometimes referred to as bipolar because they can generate both positive and negative voltages and currents. Bipolar output channels may or may not have current sinking capabilities (Quadrants II and IV).

An output channel on a four-quadrant power supply or SMU can both source and sink power with a positive or negative voltage and current. For example, a PXI-413x SMU is capable of both sourcing power in Quadrant I or Quadrant III and sinking power in Quadrant II or Quadrant IV. Thus, PXI-413x SMUs are bipolar, four-quadrant devices.

Refer to the ***PXIe-4150 Specifications*** for more information about the sourcing capability of your device, as well as detailed power limits.

Output Impedance

NI power supplies and SMUs include output amplifiers that drive their outputs through series resistors. The resistors enable the measurement and control of output current. The value of the resistor is larger for low-current ranges and smaller for high-current ranges.

Depending on whether the device is in constant voltage mode or in constant current mode, feedback can make the output behave like a true voltage or current source at DC. At higher frequencies, there is no feedback, and the output behaves like a voltage source in series with the selected output resistor.

In constant current mode, the controller forces the output current, as determined by the voltage across the sense resistor, to match the setpoint, regardless of the actual output voltage. The slew rate of the instrument to a new setpoint will be limited by output capacitance in constant current mode.

In constant voltage mode, the controller forces the output voltage to match the setpoint, even when there is a voltage drop across the resistor. The slew rate of the instrument to a new setpoint will be limited by output inductance in constant voltage mode.

Output Capacitance

- **Virtual Capacitance**—Represents a capacitance synthesized by the action of a control loop on a resistor rather than from an actual capacitor. A true current source has an output impedance of infinity. Because of the finite bandwidth of the control loop, the output behaves like a true current source only at DC. At higher frequencies, the output impedance approaches the value of the series resistance. The output behaves like a current source in parallel with a capacitor. The value of the virtual capacitance increases as the output current decreases in percent of full-scale range.
- **Real Capacitance**—Capacitance added by components and interconnections in the device. Generally, this real capacitance is smaller than the virtual capacitance caused by the operation of the control loop, especially in high current ranges. However, some devices include large values of real output capacitance to improve performance for certain use cases.

Output Inductance

- **Virtual Inductance**—Represents an inductance synthesized by the action of a control loop on a resistor rather than from an actual inductor. A true voltage source has an output impedance of zero. Because of the finite bandwidth of the control loop, the output behaves like a true voltage source only at DC. At higher frequencies, the output impedance approaches the value of the series resistance. In general, the output behaves like a voltage source in series with a parallel combination of the series resistance and an inductor.
- **Real Inductance**—Inductance added by components and interconnections in the device. Generally, this real inductance is smaller than the virtual inductance caused by the operation of the control loop, especially in low current ranges.

Decreasing Output Capacitance

Output capacitance has an effect on the output slew rate. You can decrease output capacitance and increase the speed of the PXIe-4150.

Decreasing Virtual Output Capacitance

Virtual output capacitance can significantly limit output slew rate. For example, consider the PXIe-4150 stepping from 1 V to 2 V in the 1 A range with a 20 mA compliance limit. Even in the absence of a load, the 20 mA compliance current charging the virtual capacitance limits the output slew rate. You can adjust the settings of NI-DCPower to decrease the effect of virtual output capacitance.

You can decrease output capacitance by increasing the compliance limit. In that case, the real output capacitance does not decrease, but the current available to charge it increases. Increasing the compliance limit to full-scale value of the current range in the preceding example effectively removes the output-current-related slew rate limit.

Decreasing Real Output Capacitance

Real output capacitance can limit slew rate. To decrease output capacitance, you can use shorter length cabling to reduce the actual capacitance of the load.

When slew rate is limited by the current available to charge a real output capacitance, changing ranges or GBW settings has no effect. Changing ranges or GBW settings

affects only the virtual output capacitance.

Using NI-DCPower to Decrease the Impact of Output Capacitance

You can increase the compliance limit in NI-DCPower to decrease the impact of output capacitance. The real output capacitance does not decrease, but the current available to charge it increases. Increasing the compliance limit to 100 mA in the preceding example effectively removes the output-current-related slew rate limit.

> **Note** The current ADC does not measure the current that charges the virtual output capacitance. Therefore, when the output slew rate is limited by the available charging current, that current may not be measured by the current measurement circuitry.

Decreasing Output Inductance

Cable inductance has an effect on the output current slew rate. You can decrease cabling inductance and increase the speed of the PXIe-4150.

You can perform any of the following actions to decrease output inductance:

- Use shorter length cabling.
- Reduce the loop area between the + and - terminals.

Protection

The output channels and the auxiliary power input of the PXIe-4150 are protected against overcurrent, overvoltage, inverse voltage, and over-temperature conditions.

Output Channel Protection

The output channel on the PXIe-4150 is overcurrent-protected. In the event of an overcurrent condition, the channel enters current compliance mode. The channel has cycle-by-cycle current limiting and additional over-current protection on the external power input that protects the channel in the event of a current compliance mode failure. In the event that an inverse voltage is applied to the channel, a reverse protection diode prevents damage to the channel. A thermal overload circuit protects

this diode by engaging the output disconnect feature in the event of an inverse voltage with large current capability.

> **Caution** Each output channel of the PXIe-4150 can withstand the application of an external voltage up to 10 V beyond the rated output level. Applying an external voltage greater than 10 V beyond the rated output level can damage the output channel.

In the event of an over-temperature condition (that is, the enclosure or component temperatures exceed safe operating limits), the thermal shutdown circuits on the PXIe-4150 disable the output channel that indicated the failure condition, disable all other channels, disable external power, and disconnect the outputs. When disabled, an output channel can only be reset programmatically after the failure condition is cleared.

Auxiliary Input Protection

The auxiliary power input of the PXIe-4150 can accept voltages up to 52.8 V. Applying a voltage above 52.8 V disables the auxiliary power input.

This device is overvoltage protected >52.8 V. Refer to the ***PXIe-4150 Specifications*** for more information about overvoltage protection for this device.

In the event of an overcurrent (>30 A) or an inverse voltage condition, the auxiliary power input fuse may blow to protect the PXIe-4150 and the load.

Overload Protection (OLP)

The PXIe-4150 is protected against overcurrent (OCP) conditions and overvoltage (OVP) conditions.

> **Note** Refer to NI-DCPower Overload Protection Error (OLP) Codes for more information about these NI-DCPower errors.

Overcurrent Protection (OCP)

Overcurrent Protection (OCP) engages protection circuitry when the maximum specified current has been surpassed. This feature disables the output of the affected channel and disconnects the channel circuitry from the output connector pins. By internally disconnecting the output, it protects both the PXIe-4150 and the device under test (DUT).

To clear an OCP condition, first identify and fix the cause of the error and then reset the channel or device in MAX or use the niDCPower Reset Device VI or the `niDCPower_ResetDevice` function.

Do not apply voltages at the output that exceed the ratings of the PXIe-4150. Refer to the ***PXIe-4150 Specifications*** for information about voltage ratings.

Overvoltage Protection (OVP)

Overvoltage Protection (OVP) is a feature that prevents excessive voltage from being applied to a device under test (DUT) connected to a power supply. When voltage output exceeds a certain limit, the device output shuts down and NI-DCPower generates an error.

To clear an OVP error condition, first identify and fix the cause of the error and then use the niDCPower Reset VI or the `niDCPower_Reset` function.

INHIBIT Pin

The INHIBIT input pin forces the PXIe-4150 output to an inhibited state if not shorted to ground. This inhibited state forces the PXIe-4150 to source 0 V, with a current limit of 1% of the configured device current range.

Disconnecting the PXIe-4150 INHIBIT pin has no effect on the programming state of the device. If you disconnect the INHIBIT pin while the PXIe-4150 is running, the device will continue running and can respond to triggers, generate events, and take measurements. Measurements taken while the PXIe-4150 is inhibited will return a warning as well as the measurement.

You must short the INHIBIT pin to ground to restore normal PXIe-4150 operation and

restore the device to its most recent configuration. If you short the INHIBIT pin to ground while a sequence is running, the PXIe-4150 returns to the configuration corresponding to the active sequence step. For example, if your device is sourcing a single point while inhibited, shorting the INHIBIT pin returns the PXIe-4150 to that setpoint, while the PXIe-4150 will jump to the active sequence step if you are sourcing a sequence.

You can determine if your PXIe-4150 is inhibited using the following indicators:

- The PXIe-4150 voltage LED blinks green when the device is inhibited.
- NI-DCPower measurement functions return warnings if you take a measurement while the device is inhibited.
- Device self-tests return driver errors if executed while the device is inhibited.
- The `niDCPower_QueryOutputState` function returns `VI_TRUE` if you pass `NIDCPOWER_VAL_OUTPUT_INHIBITED` as the `outputState` parameter.

> **Note** The INHIBIT pin is disabled during self-calibration and external calibration. Disconnecting the INHIBIT pin has no effect on the device when performing self-calibration or external calibration.

Related information:

- Programming States

Load Regulation

Load regulation is a measure of the ability of an output channel to remain constant given changes in the load.

Depending on the control mode enabled on the output channel, the load regulation specification can be expressed in one of two ways:

- In constant voltage mode, variations in output current result in changes in the output voltage. This variation is expressed as a percentage of output voltage range per amp of current change, or as a change in voltage per amp of current change, and is synonymous with a series resistance.
  - When Sense - is connected to -, and Sense + is connected to + at the terminal

block, the load regulation specification defines how close the output series resistance is to 0 Ω—the series resistance of an ideal voltage source. Many supplies have protection circuitry at the output that slightly increases the output series resistance.

- In constant current mode, variations in load voltage result in changes to the output current. This variation is typically expressed as a percentage of output current range per volt of output change, and is synonymous with a resistance in parallel with the output channel terminals. In constant current mode, the load regulation specification defines how close the output shunt resistance is to infinity—the parallel resistance of an ideal current source. In fact, when load regulation is specified in constant current mode, parallel resistance is expressed as 1/***load regulation***.

Inductive Loads

In constant voltage mode, most inductive loads remain stable. However, when operating in constant current mode in higher current ranges, increasing output capacitance may help improve stability.

Capacitive Loads

Generally, a power supply remains stable when driving a capacitive load. Occasionally, certain capacitive loads can cause ringing in the transient response of the instrument. The instrument may temporarily move into constant current mode or unregulated mode when the output voltage is reprogrammed while capacitive loads are present.

The slew rate is the maximum rate of change of the output voltage as a function of time. When driving a capacitor, the slew rate is limited to the output current limit divided by the total load capacitance, as expressed in the following equation:

$$(\Delta \boldsymbol{V}/\Delta \boldsymbol{t}) = (\boldsymbol{I}/\boldsymbol{C})$$

where $\Delta \boldsymbol{V}$ is the change in the output voltage

$\Delta \boldsymbol{t}$ is the change in time

I is the current limit

C is the total capacitance across the load

Series resistance and lead inductance from cabling can affect the stability of the device. In some situations, you may need to increase the capacitive load or locally bypass the circuit or system being powered to stabilize the power supply.

Transient Response

In reference to power supplies and SMUs, transient response describes how a supply responds to a sudden change in load.

Changes in load current, such as a current pulse, can cause large voltage transients. The transient response specifies how long it takes before the transients recover. The following figure shows how the transient behavior is typically specified. The transient response time specifies how quickly the supply can recover to within a certain voltage (Δ***V***) when a specific change in load (Δ***I***) occurs. Some power supplies also specify a maximum transient voltage dip under the same load conditions.

Figure 14. Transient Response

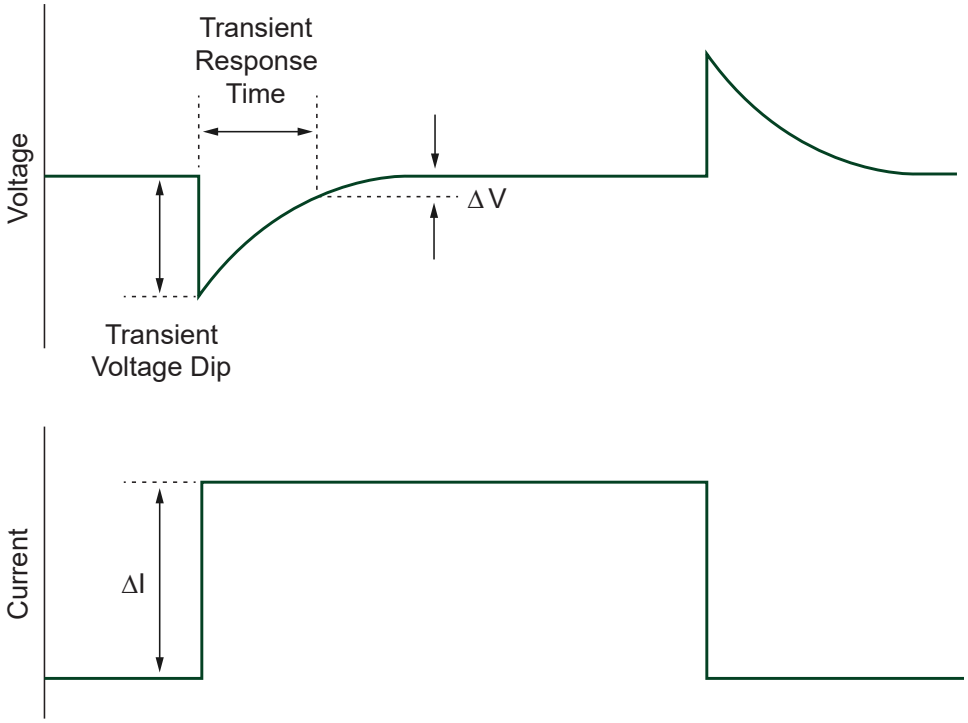

There is a trade-off between transient response and the stability of the supply under a wide variety of loads. To achieve the fastest transient response, an instrument should have a high gain-bandwidth (GBW) product, but the higher GBW is, the more likely it is that the instrument will become unstable with certain loads. Thus, most instruments compromise performance to achieve stability under most conditions. Other instruments allow a degree of customization to enable optimization of performance under different circumstances.

Pulse Loads

Load current can vary between a minimum and a maximum value in some applications. In the case of a varying load, or pulse load, the constant current circuit of the power supply limits the output current.

Occasionally, a peak current may come close to exceeding the current limit and cause the power supply to temporarily move into constant current mode or unregulated mode.

To remain within the power supply output specifications with pulsed loads, use niDCPower Configure Current Limit to configure the current limit to a value greater than the expected peak current of the load.

In extreme situations, you may be able to parallel-connect multiple power supply channels to provide higher peak currents.

Reverse Current Loads

Occasionally, an active load may pass a reverse current to the power supply.

To avoid reverse current loads, use a bleed-off load to preload the output of the device. Ideally, a bleed-off load should draw the same amount of current from the device that an active load may pass to the power supply.

> **Caution** Power supplies not designed for four-quadrant operation may become damaged if reverse currents are applied to their output terminals. Reverse currents can cause the device to move into an unregulated mode

and can damage the instrument. Refer to the ***PXIe-4150 Specifications*** for more information about channel capabilities.

Note The sum of the bleed-off load current and the current supplied to the load must be less than the maximum current of the instrument.

Ranges

Programmable power supplies use one or more ranges for voltage and current input, as well as one or more ranges for voltage and current measurement.

Use the highest resolution (smallest) range possible for a particular application to get maximum input and measurement accuracy. Refer to the ***PXIe-4150 Specifications*** for more information about what ranges are available for a particular channel on your device.

Note The measurement range is implicitly selected based on the configured output range. Thus, you cannot change the measurement range independently of the output range. The selected measurement range is large enough to measure any voltage or current within the configured output range.

Ranges are typically described as the maximum possible value from zero that the range can output or measure (not including the overrange). For example, in the 20 mA current level range, the current level can be configured up to 20 mA.

- When niDCPower Configure Output Function is set to DC Voltage, the voltage level range and current limit range are in use.
- When niDCPower Configure Output Function is set to DC Current, the current level range and voltage limit range are in use.

Overranging

If niDCPower Overranging Enabled is set to TRUE, the valid values for the programmed output (voltage level, voltage limit, current level, and current limit) may be extended

beyond their normal operating range on channels that support this feature.

Enabling overranging for a particular channel extends voltage and current output capabilities from 100% to 105% for the output range. Overranging is applicable to output ranges only and does not apply to measurement ranges. Measurements in any given range may be made up to 105% of the range by default without enabling overranging.

Noise

Noise is unwanted signals present on the output channels that can affect devices connected to the output channels.

Noise can be characterized as normal-mode noise or common-mode noise. Regardless of its characterization, noise is meaningful only when it is specified with an associated bandwidth.

- **Common-mode noise**—Noise present between the Output common - terminal and the chassis or earth ground. In this sense, the equivalent circuit is a current noise source connected across these two terminals. When you connect an impedance between the output common/ground and chassis or earth ground, a noise current can flow in the impedance, resulting in an unexpected offset or other undesirable error.
- **Normal-mode noise**—Noise present between the + terminal and the common - terminal, appearing either in series (constant voltage mode) or parallel (constant current mode) with the output of the device. Normal-mode noise can be expressed as voltage noise or current noise, depending on the control mode of the output channel.

  AC-to-DC rectification causes ripple, a type of periodic normal-mode noise.

Verifying Output Noise Specifications

Exercise care when verifying the noise specifications of an output device, such as a power supply. When verifying the specified wideband noise of a device, the effects of ground loops, unnecessarily long probe ground leads, and electrically noisy environments can combine and skew your measurements.

Observe the following recommendations when verifying the output noise specifications of a power supply:

- Connect the probe directly to the terminals of the power supply. Do not use long leads, loose wires, or unshielded cables.
- Limit the probe ground lead to 2.54 cm (1 in.) at most. Connect this lead directly to the output common/ground terminal of the appropriate channel.
- Set the bandwidth of the measurement device to the bandwidth of interest.
- Exercise caution when making measurements in a modern laboratory environment—with computers, electronic ballasts, switching power supplies, and so on—to avoid measuring the environment noise instead of the device noise.

AC and DC Noise Rejection

You can manipulate the aperture time of measurements made with SMUs and power supplies to reject specific AC noise frequencies in DC voltage and current measurements.

Each measurement that an NI-DCPower instrument returns is an average of one or more higher-speed samples. All instruments return a multiple of 50 Hz and/or 60 Hz to enable rejection of power line noise.

You can reject AC noise by adjusting the measurement aperture time to be a multiple of the AC noise period.

You can reject the frequency of noise by adjusting the aperture time to be a multiple of an AC noise frequency with $\boldsymbol{Period} = 1/\boldsymbol{f}$.

Normal DC Measurement Noise Rejection

The PXIe-4150 only supports normal DC measurement noise rejection. With normal noise rejection, the instrument assigns equal weight to each sample. This setting mimics the behavior of most traditional power supplies and SMUs.

The following figure shows normal weighting, with aperture times on the x-axis and relative weighting on the y-axis.

Figure 15. Normal Noise Rejection

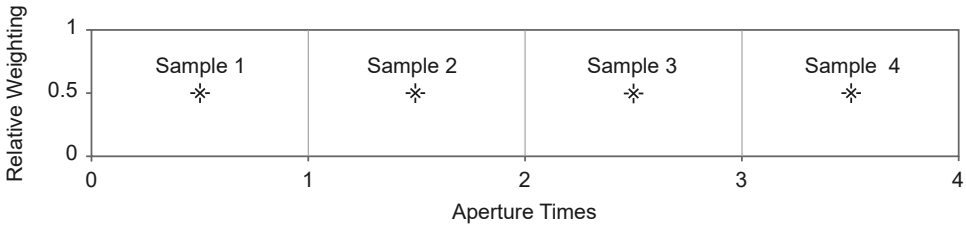

The following figure shows the resulting noise rejection as a function of frequency, with multiples of 1 / ***Aperture Time*** on the x-axis and magnitude response, in dB, on the y-axis.

Figure 16. Normal Noise Rejection by Frequency

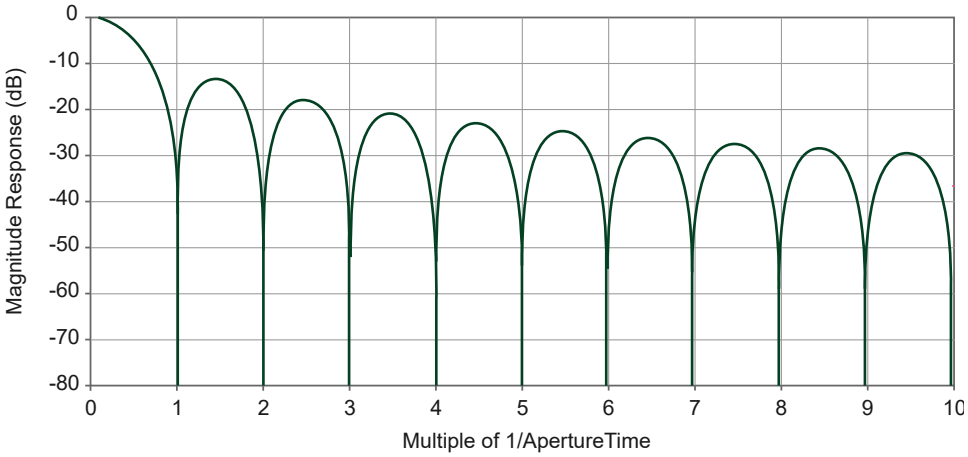

The best frequency rejection is available only near integer multiples of 1 / ***Aperture Time***. You can achieve the fastest possible readings along with good power-line noise rejection by setting the aperture to one power-line cycle (PLC) and noise rejection to Normal.

Rejecting AC Noise in DC Measurements with Aperture Time

Directly adjusting the aperture time of your measurements allows you to reject specific AC noise frequencies in your DC measurements with NI-DCPower.

Complete the following steps to reject AC noise frequencies by adjusting the aperture time of your measurements.

1. Based on the aperture time unit you intend to use, calculate the aperture time required to reject the frequency f (Hz) you need to reject.

- Aperture time units: ***Aperture Time*** = 1 / f seconds
- Aperture time units: power line cycles (PLC)

Power Line Frequency	Target Aperture Time (PLC)
60 Hz	***Aperture Time*** = 60 Hz / f
50 Hz	***Aperture Time*** = 50 Hz / f

> **Note** Each NI-DCPower instrument supports discrete aperture times: an instrument-specific minimum value and integer multiples of that value. When you set an unsupported aperture time, NI-DCPower coerces the value to the nearest longer supported value for your instrument.

2. Configure the aperture time you calculated.
   a. Set the aperture time and the appropriate units with Configure Aperture Time.
   b. If using power line cycle units, provide the frequency of the AC power line for your system to Configure Power Line Frequency.

Power Measurements

Each channel of the PXIe-4150 has two synchronized ADCs that measure voltage and current. You can use NI-DCPower to measure power flowing to or from the PXIe-4150.

You can use the following VIs and functions to measure both current and voltage for both channels of the PXIe-4150.

- niDCPower Measure Multiple VI or `niDCPower_MeasureMultiple` function
- niDCPower Fetch Multiple VI or `niDCPower_FetchMultiple` function

Power can be computed as the product of the voltage and the current. If the power measurement is positive, the PXIe-4150 is sourcing power. If the power measurement is negative, the PXIe-4150 is sinking power.

Resistance Measurements

NI power supplies and SMUs can make resistance measurements because they can

both generate and measure test voltages and currents. Because they can operate as precision current sources at high current levels, these devices are well suited to measure low resistance values.

To measure a resistance with an NI power supply or SMU, select a test current that creates a voltage drop within module capabilities. After the channel output is enabled and settled, use the niDCPower Measure Multiple VI or the `niDCPower_MeasureMultiple` function to measure the actual current being delivered to the resistor as well as the measured voltage across the resistor. To determine the accuracy of a resistance measurement, the accuracy specifications of both current and voltage measurements for the power supply or SMU should be taken into account. For channels with remote sense capabilities, enabling this feature results in a more accurate voltage measurement at the resistor terminals.

Compensation for Offset Voltages

When measuring low-value resistances, thermal voltages may introduce significant offsets into the resistance measurement path. If an offset voltage exists in series with the resistance to be measured, as in the following figure, taking a second measurement at a different current output setpoint allows the offset to be accounted for in the resistance calculation.

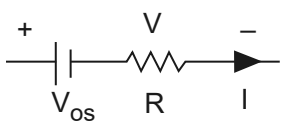

The two test currents, I_1 and I_2, create voltage drops of V_1 and V_2, respectively. Thus, the following two equations can be derived:

- $V_1 = I_1R + V_{OS}$
- $V_2 = I_2R + V_{OS}$

Rearranging these two equations allows you to calculate the unknown resistance, R, without measuring V_{OS}. Assuming the currents I_1 and I_2 are different, the following equation can be derived:

$$R = (V_2 - V_1) / (I_2 - I_1)$$

For the best signal-to-noise performance, test currents of opposite polarity should be used (for example, +100 mA and -100 mA). If currents of opposite polarity are not feasible, the next best solution is to use test currents that are as far apart as possible. For example, if your first current is 1 A, you could choose a second test current of 10 mA.

Sourcing and Measuring Terminology

Refer to the following terms when learning more about the features and usage of the PXIe-4150:

- **Aperture Time**—The period during which an ADC reads the voltage or current on a power supply or SMU. Aperture time can be specified in seconds (s) or power line cycles (PLCs). Measurement resolution, measurement speed, and frequency rejection are all functions of aperture time.

  > **Tip** Select longer aperture times to improve measurement resolution; select shorter aperture times to increase the measurement speed.

- **Compliance**—For power supplies and SMUs, a channel is operating in compliance when it cannot reach the requested output level because the programmed limit has been reached.
- **Line Regulation**—A measure of the ability of the power supply or SMU to maintain the output level given changes in the input line voltage. Line regulation is expressed as percent of change in the output level relative to the change in the input line voltage.

  For NI DC power supplies and SMUs, the line regulation specification only applies to devices with an auxiliary power input.

- **Load Regulation**—A measure of the ability of an output channel to remain constant given changes in the load. Load regulation expression depends on the control mode enabled on the output channel.
- **Resolution**—The smallest change in the voltage or current measurement that can be detected by hardware. It is usually specified in absolute units, like µV or nA.
  - Measurement resolution is typically limited by the ADC used for the measurement, but may also be limited by other factors, such as noise.

- Output resolution is typically limited by the finite number of steps that are available in the device DAC circuit, but may also be limited by other factors, such as noise.

Refer to the ***PXIe-4150 Specifications*** for measurement resolution and output resolution information.

- **Sensitivity**—Sensitivity is the smallest unit of a given parameter that can be meaningfully detected with an instrument under specified conditions. This unit is generally equal to the measurement resolution in the smallest range of a power supply or SMU.
- **Settling Time**—Settling time specifies the time required for an output channel to stabilize to within a specified percentage of its final value. This value is typically included in the device specifications.

Sourcing Voltage and Current

The PXIe-4150 can perform operations to source and measure voltage and current. In order to perform these operations, use the NI-DCPower driver to configure software settings and execute operations.

Refer to the following table for an overview of common source and measure operations as well as the software setting combinations that enable the PXIe-4150 to perform each operation.

Table 16. Software Settings for PXIe-4150 Source and Measure Operations

PXIe-4150 Operation	Software Settings	
	Output Function	**Source Mode**
Source voltage	DC Voltage	Single Point or Sequence
Measure current or voltage		
Source current	DC Current	
Measure voltage or current		

Complete the following general steps to source current or voltage.

1. Initialize a Session
   Use the NI-DCPower driver to initialize a session with the PXIe-4150.
2. Configure the PXIe-4150 for Sourcing
   Use the NI-DCPower driver with the PXIe-4150 to control the output the instrument generates. Depending on the output function and source mode, you can configure the appropriate output levels and limits.
3. Configure the PXIe-4150 for Measuring
   Once you configure channels and they are in the Running state, the PXIe-4150 can take measurements.
4. Configure Triggers and Events
   You can use triggers and events to coordinate the operation of multiple channels and instruments.
5. Initiate the PXIe-4150 for Sourcing and Measuring
   Initiate the channels of the PXIe-4150 to apply a configuration and start generating.

6. Acquire Measurements
   The applied channel configuration determines how the PXIe-4150 acquires measurements.
7. Cease Generation
   NI-DCPower includes different options for stopping generation on PXIe-4150 channels and returning the channels to a known state.
8. Close the Session
   Use the NI-DCPower driver to close a session with the PXIe-4150.

Initialize a Session

Use the NI-DCPower driver to initialize a session with the PXIe-4150.

Use the niDCPower Initialize With Independent Channels VI or the niDCPower_InitializeWithIndependentChannels function to initialize a session.

For any application you write, you must open a session to establish communication with the PXIe-4150 or specified channel(s) by initializing.

Initializing returns an instrument handle with the session configured to a known state. Initialization can take a significant amount of time compared to other NI-DCPower VIs and functions, so you should not include it in a loop when repeatedly acquiring data. Ideally, your program should call Initialize With Independent Channels one time. If the reset parameter is set to TRUE, device channels are reset to the default state, which may include resetting relays.

Configure the PXIe-4150 for Sourcing

Use the NI-DCPower driver with the PXIe-4150 to control the output the instrument generates. Depending on the output function and source mode, you can configure the appropriate output levels and limits.

Complete the following steps to define an output type, choose a source mode, and set the output levels and limits relevant to those selections.

1. Use the Configure Output Function function to set the output type you want to generate: DC Voltage or DC Current.

- Select an output type:

Option	Description
DC Voltage	A channel attempts to generate the desired output voltage level, as long as the output current is below the current limit.
DC Current	A channel attempts to generate the desired output current level, as long as the output voltage is below the voltage limit.

2. Configure the source mode with the Configure Source Mode With Channels function.
   The source mode controls how the channel generates output levels.
3. Depending on your output function and source mode, set the relevant levels and limits with the following functions and/or properties.
   - DC output functions:

Output Function	Source Mode		Level Control	Limit Control
DC Voltage	Single Point		`voltage level` input to Configure Voltage Level	`current limit` input to Configure Current Limit
	Sequence	Simple sequence	`values` input to Set Sequence	`current limit` input to Configure Current Limit
		Advanced sequence	Voltage Level property	Current Limit property
DC Current	Single Point		`current level` input to Configure Current Level	`voltage limit` input to Configure Voltage Limit
	Sequence	Simple sequence	`values` input to Set Sequence	`voltage limit` input to Configure Voltage Limit

Output Function	Source Mode		Level Control	Limit Control
		Advanced sequence	Current Level property	Voltage Limit property

4. Further define the parameters of the channel output.
   The NI-DCPower API includes numerous functions and properties to exert finer control over the output. For example, among other aspects, you can specify output ranges, set asymmetric compliance limits with respect to zero, control the on and off time of pulses, or take advantage of triggering.

Configure the PXIe-4150 for Measuring

Once you configure channels and they are in the Running state, the PXIe-4150 can take measurements.

Use the **niDCPower Measure** property or the **NIDCPOWER_ATTR_MEASURE_WHEN** attribute to configure how NI-DCPower takes measurements.

The following table lists the settings for the **niDCPower Measure** property or the **NIDCPOWER_ATTR_MEASURE_WHEN** attribute.

Measure When	Details
On Demand	Acquire measurements on demand using the niDCPower Measure VI and the niDCPower_Measure function to measure either the voltage or the current on a single channel. Or use the niDCPower Measure Multiple VI and the niDCPower_MeasureMultiple function to measure both the voltage and the current on multiple channels. When you call these VIs and functions, the PXIe-4150 takes a measurement and returns it.
Automatically after Source Complete	The PXIe-4150 acquires a measurement after every source operation and stores it in a buffer on the device. You can use the niDCPower Fetch Multiple VI and the niDCPower_FetchMultiple function to retrieve measurements from the buffer.
On Measure Trigger	The PXIe-4150 acquires a measurement when it receives a Measure trigger and stores it in a buffer on the device. You can use the niDCPower Fetch Multiple VI and the niDCPower_FetchMultiple function to retrieve measurements from the buffer.

Configure Triggers and Events

You can use triggers and events to coordinate the operation of multiple channels and instruments.

Triggers

A ***trigger*** is an input signal received by an instrument or instrument channel that causes the instrument or channel to perform an action. Triggers are routed to ***input terminals*** to coordinate actions.

An ***input terminal*** is a physical trigger line, such as a PXI trigger line, or an output terminal on another instrument or channel, where an instrument or channel awaits a digital edge trigger signal.

For purposes of programming instruments with NI APIs, triggers comprise two parts:

- The action, represented with the name of the trigger, that you want the instrument or channel to take.
- The signal condition you want to serve as the stimulus for that action (for example, a rising or falling digital edge on a signal, or a software-generated edge you configure).

Triggers can be internal (software-generated) or external. You can export external triggers and use them with events to synchronize hardware operation with external circuitry or other instruments.

Most NI-DCPower instruments accept external triggers routed between the instruments using PXI trigger lines. Events assigned to a PXI trigger line can coordinate actions across channels and across instruments.

Events

An ***event*** is a signal generated by an instrument or instrument channel that indicates a specific operation was completed or a specific state was reached. Events can be routed to ***output terminals*** to coordinate the action of multiple channels or multiple instruments.

For purposes of programming instruments with NI APIs, you can control three aspects of the pulse that represents each discrete event type:

- Polarity
- Width
- Destination

Event output terminals enable you to route an event signal pulse to external devices. You can modify the polarity and duration of the pulse that is generated when an event occurs to be compatible with trigger inputs of external devices.

You typically configure events for a specific hardware condition and then export those events for use in the test program or export them to a PXI trigger line to cause an action in another instrument configured to wait for a trigger on the same PXI trigger line.

NI-DCPower Named Trigger Types

Named trigger types in NI-DCPower define the action you want an instrument or instrument channel to take upon detecting a specific signal condition.

The following named triggers are available for NI-DCPower instruments:

- **Start**—In Sequence source mode, a channel waits for a ***Start*** trigger upon entering the Running state; receiving the Start trigger causes a channel to begin source and measure operations.

  A channel does not perform any source or measure operations until it receives this trigger.

  This trigger is not used in Single Point source mode.

- **Source**—Receiving a ***Source*** trigger causes a channel to modify the source configuration.

  This trigger is available only when sourcing DC voltage or DC current.

- **Measure**—Receiving a ***Measure*** trigger, if Measure When is set to On Measure

Trigger, causes a channel to take a measurement.

A channel ignores this trigger if a measurement is already in progress or if Measure When is set to a different value.

- **Sequence Advance**—In Sequence source mode, a channel waits for the ***Sequence Advance*** trigger once an iteration of a sequence completes; receiving a Sequence Advance trigger causes the channel to begin the next iteration of the sequence.

  Sequence Loop Count must be set to a value greater than one for a sequence to iterate, and thus for this trigger to occur.

  This trigger is not used in Single Point source mode.

- **Pulse**—Receiving a ***Pulse*** trigger causes a channel to transition from the pulse bias level to the pulse level.

  This trigger is available only when sourcing pulse voltage or pulse current.

Trigger Signal Conditions

NI-DCPower includes three possible signal conditions that can serve as the stimulus for an action an instrument or channel can take: digital edge, software edge, and none (disabled).

Digital Edge

A channel performs an operation corresponding to a trigger when the channel detects a rising edge or a falling edge on a physical trigger line. Digital edge triggering is ideal for synchronizing channels.

You can configure each named trigger in NI-DCPower to operate based on a digital edge.

Figure 17. Digital Edge Trigger

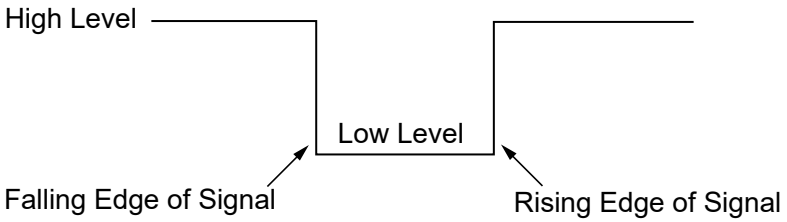

The channels may be on the same or different physical instruments. If they are on different physical instruments, NI-DCPower routes the signal over the PXI backplane trigger lines.

To configure a digital edge trigger, you must specify the input terminal that should be connected to the trigger. The input terminal can be a physical trigger line or an output terminal from another instrument or channel. If you specify an output terminal from another instrument, NI-DCPower automatically finds a route (if one is available) from that terminal to the input terminal via a physical PXI backplane trigger line.

Software Edge

When configured for software edge triggering, channels wait to receive a trigger signal sent when you call Send Software Edge Trigger.

You can configure each named trigger in NI-DCPower to operate based on a software edge trigger.

None (Disabled)

When a trigger is configured as "none" (disabled), channels do not wait for any specific signal condition to occur before performing the action that corresponds to that trigger.

For example, if the Source trigger type is set to "none," a channel does not need to receive a Source trigger to begin a source operation.

Event Types

You can route events on most NI-DCPower instruments. NI-DCPower includes specific events you can use in tandem with triggers to coordinate actions across channels of an instrument and across instruments.

- **Source Complete**—Generated by a channel when a sourcing operation, plus any configured source delay, is completed.

  In Single Point source mode, this event is generated whenever the source configuration is modified plus the associated source delay.

  In Sequence source mode, this event is generated after each step of the sequence plus the associated source delay for the step.

  The amount of configurable delay you can add depends on your instrument.

- **Sequence Iteration Complete**—Generated in Sequence source mode once all steps in a single iteration of a sequence are completed.

  One event is generated per iteration of the sequence. For example, if the sequence is configured to loop ten times on a channel, the channel generates ten events.

- **Sequence Engine Done**—Generated in Sequence source mode once all iterations of a sequence are completed.
- **Measure Complete**—Generated when a measurement, plus any configured measure delay, is completed.

  The amount of configurable measure delay you can add depends on your instrument.

- **Ready for Pulse Trigger**—Generated in Sequence source mode for any step after the first step of a sequence iteration once the pulse off time elapses to indicate the channel is waiting to receive a Pulse trigger before the channel will apply the pulse level.
- **Pulse Complete**—Generated once a pulsing operation, plus any configured source delay, is completed.

  In Single Point source mode, this event is generated whenever the source configuration is modified plus the associated pulse bias delay.

  In Sequence source mode, this event is generated after each step of the sequence plus the associated pulse bias delay for the step.

NI-DCPower Event Signal Configurations

Each event type in NI-DCPower has its own set of three properties that you can use to configure the polarity, width, and destination of the event pulse signal.

- **Pulse polarity**—Whether the generated event pulse is a rising edge (positive pulse) or a falling edge (negative pulse)
- **Pulse width**—The duration of the event pulse
- **Output terminal**—The physical trigger line or input terminal on another instrument or channel to which the event is routed

Valid Pulse Widths for Events on the PXI Platform

PXI instruments have an allowable range of pulse widths you can configure for events.

You set the pulse width in terms of the duration, in seconds, the pulse should last. Pulse width applies only to events that are connected to external physical trigger lines, such as the PXI trigger lines. The PXIe instrument event pulse width range is [250 ns, 1.6 µs].

This range is defined by the ***PXI Express Specification***.

NI-DCPower Synchronization Methods

Synchronization allows you to coordinate the action of multiple NI instruments. There are multiple approaches to synchronizing NI instruments; the accuracy (trigger delay and jitter) of the synchronization depends on the approach you take and the system and instruments in use.

NI-DCPower supports the following synchronization methods.

- **Software-Based Synchronization**—Sends a software command from a host computer to an instrument. Not deterministic on general-purpose operating systems such as Windows.

  Accuracy: tens of milliseconds

- **Time-Based Synchronization**—Uses a time-based protocol such as GPS, 1588, or

IRIG-B to coordinate events. Can be used over large distances (>10 m). Remote chassis that include a PXI synchronization module can be programmed to generate triggers on the backplane at a specific time.

Accuracy: <100 ns + NI-DCPower instrument trigger delay and jitter

- **Signal-Based Synchronization**—Uses trigger signals to coordinate operations. Comprises the following:
  - PXI Trigger Routing—Sends a trigger signal, which corresponds to an event, from one instrument to another through the routes available in a PXI chassis (for PXIe/PXI instruments). The closer the signal paths between instruments are in length, the better the synchronization accuracy.

    Accuracy: tens of nanoseconds + NI-DCPower instrument trigger delay and jitter

  - External Triggering—Sends a signal external to a PXI chassis or, for other instrument form factors, to an instrument through I/O lines. The closer the signal paths between instruments are in length, the better the synchronization accuracy. Time locking improves determinism.

    > **Note** Most NI-DCPower instruments cannot receive external digital triggers via their front panels. However, for NI-DCPower instruments that support triggering, you can send an external trigger to the instrument through another instrument installed in your chassis that does accept external triggers. You can route these trigger signals through the trigger lines on the chassis backplane.

Refer to the ***PXIe-4150 Specifications*** for the trigger delay and jitter of your instrument.

Multichannel Synchronization and Signal Routing in NI-DCPower

You can synchronize multiple channels with NI-DCPower by routing signals—events and triggers—from one channel to another, including channels that span multiple physical instruments.

You can export (***route***) the trigger and event signals to one of the physical PXI backplane trigger lines using Export Signal With Channels.

> **Tip** You can use Wait For Event With Channels to make a channel wait to take an action until a specific event is generated.

Instead of explicitly exporting signals to physical trigger lines, NI-DCPower can automatically create routes for you. To have NI-DCPower automatically create routes, set the digital edge input terminal of one channel to be the event from another channel.

Example: Synchronizing Measure and Source Operations

To make `PXI1Slot3/0` wait for the measurement of `PXI1Slot3/1` to complete before `PXI1Slot3/0` changes the source configuration, route the Measure Complete event of `PXI1Slot3/1` to the Source trigger of `PXI1Slot3/0`.

To do this, configure the Source trigger of `PXI1Slot3/0` to anticipate a digital edge and set the input terminal to `/PXI1Slot3/Engine1/MeasureCompleteEvent`.

Initiate the PXIe-4150 for Sourcing and Measuring

Initiate the channels of the PXIe-4150 to apply a configuration and start generating.

Use the niDCPower Initiate With Channels VI or the niDCPower_InitiateWithChannels function to apply the configuration and start generating voltage or current.

Acquire Measurements

The applied channel configuration determines how the PXIe-4150 acquires measurements.

Measuring and Querying

Use the following functions to acquire measurements in Single Point source mode:

1. Measure with the niDCPower Measure Multiple VI or the niDCPower_MeasureMultiple function.
2. Call the niDCPower Query in Compliance VI or the niDCPower_QueryInCompliance function to query the output state.

Fetching

The PXIe-4150 automatically acquires measurements when you configure the following VIs or functions:

- niDCPower Create Advanced Sequence With Channels VI or the niDCPower_CreateAdvancedSequenceWithChannels function
- niDCPower Set Sequence VI or the niDCPower_SetSequence function
- niDCPower Configure Output Function VI set to Pulse Voltage or Pulse Current or the niDCPower_ConfigureOutputFunction function set to NIDCPOWER_VAL_PULSE_CURRENT or NIDCPOWER_VAL_PULSE_VOLTAGE

These measurements are automatically acquired by coercing the niDCPower Measure When property to Automatically After Source Complete or the NIDCPOWER_ATTR_MEASURE_WHEN attribute to NIDCPOWER_VAL_AUTOMATICALLY_AFTER_SOURCE_COMPLETE. To fetch these measurements, call the niDCPower Fetch Multiple VI or the niDCPower_FetchMultiple function. NI-DCPower returns the measurement values in an array.

> **Note** If you want the measure unit to operate independently of the source unit in this context, set the niDCPower Measure When property or the NIDCPOWER_ATTR_MEASURE_WHEN attribute to a value other than Automatically After Source Complete or NIDCPOWER_VAL_AUTOMATICALLY_AFTER_SOURCE_COMPLETE.

Cease Generation

NI-DCPower includes different options for stopping generation on PXIe-4150 channels and returning the channels to a known state.

Option	How To	Description
Disabling the output	Set the Output Enabled property to `False`	Generates 0 V on a channel. ±2% of the current limit range presently configured for the channel remains on the channel.
Disconnecting the output	Set the Output Connected property to `False`	Disconnects a physical relay on a channel that completely interrupts generation on the channel.

Note To avoid excessive relay wear, do not set Output Connected to `True` with a non-zero voltage connected to the output.

Related concepts:

- INHIBIT Pin

Disabling the Output

The output of a channel is enabled by default when the channel enters the Running state. However, you can programmatically enable and disable the output channel(s) of the PXIe-4150.

When you disable the output of the PXIe-4150, the instrument is configured to output a DC voltage at 0 V with current limits at ±2% of the presently configured current limit range in, unless otherwise noted, a low-impedance state.

When you enable a previously disabled channel, levels and limits are applied to the channel depending on the output function as follows:

- **Voltage output functions**—The programmed voltage level and current limit are applied to the channel(s)
- **Current output functions**—The programmed current level and voltage limit are applied to the channel(s)

You can use the Configure Output Enabled function to toggle the output of an instrument.

Tip To ensure the output is disabled on the hardware, after using the Configure Output Enabled function or Output Enabled property, use the Wait For Event With Channels function. This function waits for the Source Complete event before calling the Abort With Channels function to transition the session out of the Running state.

Disconnecting the Output

You can open an internal relay in order to completely disconnect the Output HI and Output LO and/or Sense terminals from the output connector of a channel.

For example, you might disconnect the output if a battery is connected to an output terminal in order to prevent the battery from discharging.

Notice Only disconnect the output when it is necessary for your application. Excessive connecting and disconnecting of the output can cause premature wear on the relay.

Disconnecting the output always affects the Output HI and Output LO terminals. When remote sense is enabled, disconnecting the output also affects the Sense HI and Sense LO terminals.

- **Programming the output relay directly**—Use the Output Connected property to control the state of the output relay.
- **Output disconnected indirectly**—The output relay is disconnected when you call the Reset Device function or the Disable function.
- **Power-up behavior**—The instrument powers up with the output disconnected.
- **Output connected by default in certain states**—The output is automatically connected when a channel, depending on the instrument, enters a running state.

Close the Session

Use the NI-DCPower driver to close a session with the PXIe-4150.

Use the niDCPower Close VI or the niDCPower_close function to close a session.

Closing a session is essential for freeing resources, including deallocating memory, destroying threads, and freeing operating system resources. You should close every session that you initialize, even if an error occurs during the program. When debugging your application, it is common to abort execution before you close. While aborting the execution should not cause problems, NI does not recommend doing so.

When you close a session, the channels continue to operate in their last configured state. If you close a session while the output channels are enabled and actively sourcing or sinking power, the channels continue to source or sink power until they are disabled or reset.

Cleaning the PXIe-4150 System

NI recommends the following to clean and maintain your instrument's system:

- Clean the fan filters on the chassis regularly to prevent fan blockage and to ensure efficient air circulation. Cleaning frequency depends on the amount of use and the operating environment. For specific information about cleaning procedures and other recommended maintenance, refer to the chassis user documentation.
- Clean the hardware with a soft, nonmetallic brush. Make sure that the hardware is completely dry and free from contaminants before returning it to service.

© 2025 National Instruments Corporation.