Keysight U2500A Series USB Simultaneous Sampling Multifunction Data Acquisition Devices

KEYSIGHT TECHNOLOGIES

Service Guide

Notices

Copyright Notice

© Keysight Technologies 2007 - 2017

No part of this manual may be reproduced in any form or by any means (including electronic storage and retrieval or translation into a foreign language) without prior agreement and written consent from Keysight Technologies as governed by United States and international copyright laws.

Manual Part Number

U2541-90013

Edition

Edition 9, July 1, 2017

Printed in:

Printed in Malaysia

Published by:

Keysight Technologies
Bayan Lepas Free Industrial Zone,
11900 Penang, Malaysia

Technology Licenses

The hardware and/or software described in this document are furnished under a license and may be used or copied only in accordance with the terms of such license.

Declaration of Conformity

Declarations of Conformity for this product and for other Keysight products may be downloaded from the Web. Go to http://www.keysight.com/go/conformity. You can then search by product number to find the latest Declaration of Conformity.

U.S. Government Rights

The Software is "commercial computer software," as defined by Federal Acquisition Regulation ("FAR") 2.101. Pursuant to FAR 12.212 and 27.405-3 and Department of Defense FAR Supplement ("DFARS") 227.7202, the U.S. government acquires commercial computer software under the same terms by which the software is customarily provided to the public. Accordingly, Keysight provides the Software to U.S. government customers under its standard commercial license, which is embodied in its End User License Agreement (EULA), a copy of which can be found at http://www.keysight.com/find/sweula. The license set forth in the EULA represents the exclusive authority by which the U.S. government may use, modify, distribute, or disclose the Software. The EULA and the license set forth therein, does not require or permit, among other things, that Keysight: (1) Furnish technical information related to commercial computer software or commercial computer software documentation that is not customarily provided to the public; or (2) Relinquish to, or otherwise provide, the government rights in excess of these rights customarily provided to the public to use, modify, reproduce, release, perform, display, or disclose commercial computer software or commercial computer software documentation. No additional government requirements beyond those set forth in the EULA shall apply, except to the extent that those terms, rights, or licenses are explicitly required from all providers of commercial computer software pursuant to the FAR and the DFARS and are set forth specifically in writing elsewhere in the EULA. Keysight shall be under no obligation to update, revise or otherwise modify the Software. With respect to any technical data as defined by FAR 2.101, pursuant to FAR 12.211 and 27.404.2 and DFARS 227.7102, the U.S. government acquires no greater than Limited Rights as defined in FAR 27.401 or DFAR 227.7103-5 (c), as applicable in any technical data.

Warranty

THE MATERIAL CONTAINED IN THIS DOCUMENT IS PROVIDED "AS IS," AND IS SUBJECT TO BEING CHANGED, WITHOUT NOTICE, IN FUTURE EDITIONS. FURTHER, TO THE MAXIMUM EXTENT PERMITTED BY APPLICABLE LAW, KEYSIGHT DISCLAIMS ALL WARRANTIES, EITHER EXPRESS OR IMPLIED, WITH REGARD TO THIS MANUAL AND ANY INFORMATION CONTAINED HEREIN, INCLUDING BUT NOT LIMITED TO THE IMPLIED WARRANTIES OF MERCHANTABILITY AND FITNESS FOR A PARTICULAR PURPOSE. KEYSIGHT SHALL NOT BE LIABLE FOR ERRORS OR FOR INCIDENTAL OR CONSEQUENTIAL DAMAGES IN CONNECTION WITH THE FURNISHING, USE, OR PERFORMANCE OF THIS DOCUMENT OR OF ANY INFORMATION CONTAINED HEREIN. SHOULD KEYSIGHT AND THE USER HAVE A SEPARATE WRITTEN AGREEMENT WITH WARRANTY TERMS COVERING THE MATERIAL IN THIS DOCUMENT THAT CONFLICT WITH THESE TERMS, THE WARRANTY TERMS IN THE SEPARATE AGREEMENT SHALL CONTROL.

Safety Information

CAUTION

A CAUTION notice denotes a hazard. It calls attention to an operating procedure, practice, or the like that, if not correctly performed or adhered to, could result in damage to the product or loss of important data. Do not proceed beyond a CAUTION notice until the indicated conditions are fully understood and met.

WARNING

A WARNING notice denotes a hazard. It calls attention to an operating procedure, practice, or the like that, if not correctly performed or adhered to, could result in personal injury or death. Do not proceed beyond a WARNING notice until the indicated conditions are fully understood and met.

Safety Symbols

The following symbols indicate that precautions must be taken to maintain safe operation of the instrument.

⎓	Direct current (DC)	I	On (mains supply)
∼	Alternating current (AC)	O	Off (mains supply)
≂	Both direct and alternating current	⧈	Equipment protected throughout by double insulation or reinforced insulation
3∼	Three-phase alternating current	⚠	Caution, risk of electric shock
⏚	Earth (ground) terminal	♨	Caution, hot surface
⏚	Protective earth (ground) terminal	⚠	Caution, risk of danger (refer to this manual for specific Warning or Caution information)
⏚	Frame or chassis (ground) terminal	▬	In position of a bi-stable push control
⏚	Equipotentiality	▭	Out position of a bi-stable push control

Safety Information

The following general safety precautions must be observed during all phases of this instrument. Failure to comply with these precautions or with specific warnings elsewhere in this manual violates safety standards of design, manufacture, and intended use of the instrument. Keysight Technologies assumes no liability for the customer's failure to comply with these requirements.

WARNING

- Do not use the device if it is damaged. Before you use the device, inspect the case. Look for cracks or missing plastic. Do not operate the device around explosive gas, vapor or dust.
- Do not apply more than the rated voltage (as marked on the device) between terminals, or between terminal and external ground.
- Always use the device with the cables provided.
- Observe all markings on the device before connecting to the device.
- Turn off the device and application system power before connecting to the I/O terminals.
- When servicing the device, use only specified replacement parts.
- Do not operate the device with the removable cover removed or loosened.
- Do not connect any cables and terminal block prior to performing self-test process.
- Use only the power adapter supplied by the manufacturer to avoid any unexpected hazards.

CAUTION

- Do not load the output terminals above the specified current limits. Applying excessive voltage or overloading the device will cause irreversible damage to the circuitry.
- Applying excessive voltage or overloading the input terminal will damage the device permanently.
- If the device is used in a manner not specified by the manufacturer, the protection provided by the device may be impaired.
- Always use dry cloth to clean the device. Do not use ethyl alcohol or any other volatile liquid to clean the device.
- Do not permit any blockage of the ventilation holes of the device.

Regulatory Markings

CE ISM 1-A	The CE mark is a registered trademark of the European Community. This CE mark shows that the product complies with all the relevant European Legal Directives.	c UL us LISTED	The UL Mark is a registered trademark of Underwriters Laboratories Inc. UL listing mark with the indicators “C” and “US” indicates the product compliance with both Canadian and U.S. requirements.
ICES/NMB-001	ICES/NMB-001 indicates that this ISM device complies with the Canadian ICES-001. Cet appareil ISM est conforme a la norme NMB-001 du Canada.		The RCM mark is a registered trademark of the Australian Communications and Media Authority.
C US	The CSA mark is a registered trademark of the Canadian Standards Association.		

Waste Electrical and Electronic Equipment (WEEE) Directive 2002/96/EC

This instrument complies with the WEEE Directive (2002/96/EC) marking requirement. This affixed product label indicates that you must not discard this electrical or electronic product in domestic household waste.

Product category:

With reference to the equipment types in the WEEE directive Annex 1, this instrument is classified as a “Monitoring and Control Instrument” product.

The affixed product label is as shown below.

Do not dispose in domestic household waste.

To return this unwanted instrument, contact your nearest Keysight Service Center, or visit http://about.keysight.com/en/companyinfo/environment/takeback.shtml for more information.

Sales and Technical Support

To contact Keysight for sales and technical support, refer to the support links on the following Keysight websites:

- www.keysight.com/find/U2500A
  (product-specific information and support, software and documentation updates)
- www.keysight.com/find/assist
  (worldwide contact information for repair and service)

THIS PAGE HAS BEEN INTENTIONALLY LEFT BLANK.

Table of Contents

Safety Symbols 3
Safety Information 4
Regulatory Markings 6
Waste Electrical and Electronic Equipment (WEEE) Directive 2002/96/EC 7
Product category: 7
Sales and Technical Support 7

1 Characteristics and Specifications

2 Calibration
Introduction 18
Types Of Signal Sources 19
Ground-referenced signal sources 19
Floating signal sources 19
Input Configurations 20
Differential Input Mode 20
Hardware Connection 22
Self-Calibration 26
Calibration and Performance Verification Procedure 31
Adjustment Procedures 32
Calibration Procedure 34
Step1: On-board 5V calibration 34
Step2: Self calibration 35
Step3: DAQ configuration and verification test 36
Performance Verification Steps 38
Analog input 38
Analog output 44
A/D Data Conversion 48

3 Dismantle Procedures
General Disassemble 54
Mechanical disassemble 54
Replacement Parts 58

4 Troubleshooting and Self-Test Procedures
Troubleshooting 62
Self-Test Procedures 63

A Appendix A Connector Pins Configuration
Introduction 66
Connector Pins Configuration for U2531A/U2541A/U2542A 67
55-pin Connector (J1) Pins Configuration 69

List of Figures

Figure 2-1 Ground-referenced source and differential input mode 20
Figure 2-2 Floating source and differential input 21
Figure 2-3 The analog input and calibrator connection 23
Figure 2-4 The analog input and calibrator connection 23
Figure 2-5 The analog output and DMM connection 25
Figure 2-6 The analog output and DMM connection 25
Figure 2-7 Launch the Interactive IO in Keysight Connection Expert 27
Figure 2-8 Interactive IO dialog box 28
Figure 2-9 Self Calibration Form dialog box in Keysight Measurement Manager 29
Figure 2-10 Self Calibration Form dialog box in Keysight Measurement Manager with a device being selected 30
Figure 2-11 Self Calibration Form dialog box in Keysight Measurement Manaer showing the status and resultof the self-calibration process 30
Figure 2-12 5 V calibration steps 32
Figure 2-13 On-board 5 V calibration steps 34
Figure 2-14 Self calibration steps and SCPI commands 35
Figure 2-15 DAQ settings and test steps for analog input 36
Figure 2-16 DAQ setting and test steps for analog output 37
Figure 2-17 Calibrator output hardware connection 38
Figure 2-18 Analog output channel A0201 with DMM 1 44
Figure 2-19 Analog output channel for A0202 for DMM 2 45
Figure A-1 Connector in vertical view 66
Figure A-2 Connector in horizontal view 66
Figure A-3 Pins configuration for U2531A/U2541A/U2542A 67
Figure A-4 Connector (J1) 55-pin 69

THIS PAGE HAS BEEN INTENTIONALLY LEFT BLANK.

List of Tables

Table 2-1 Step-by-step descriptions for 5 V calibration flow chart 33
Table 2-2 Offset error for U2541A/U2542A 40
Table 2-3 Offset error for U2531A 40
Table 2-4 Gain error for U2541A/U2542A 42
Table 2-5 Gain error for U2531A 43
Table 2-6 Offset error for U2541A/U2542A 46
Table 2-7 Offset error for U2531A 46
Table 2-8 Gain error for U2541/U2542A. 47
Table 2-9 Gain error for U2531A 47
Table A-1 Pins legend for U2531A/U2541A/U2542A 68
Table A-2 U2500A series J1 connector pin assignment 69
Table A-3 U2500A series J1 connector legend 70

THIS PAGE HAS BEEN INTENTIONALLY LEFT BLANK.

1 Characteristics and Specifications

For the characteristics and specifications of the U2500A Series USB Simultaneous Sampling Multifunction Data Acquisition Devices, refer to the datasheet at http://literature.cdn.keysight.com/litweb/pdf/5991-0651EN.pdf.

THIS PAGE HAS BEEN INTENTIONALLY LEFT BLANK.

2 Calibration

Introduction 18
Types Of Signal Sources 19
Input Configurations 20
Hardware Connection 22
Self-Calibration 26
Calibration and Performance Verification Procedure 31
Adjustment Procedures 32
Calibration Procedure 34
Performance Verification Steps 38
A/D Data Conversion 48

This chapter provides the descriptions for the equipments that are required for the calibration procedure and the hardware connections for analog input and analog output. The self-calibration procedure, performance verification procdure, and adjustment procedure are also included.

Introduction

Prior to checking the performace of the instrument, ensure that you have all the equipments listed in the following to perform the verification procedure for analog input and analog output.

Equipment checklist:

- ✔ Keysight U2500A Series USB Multifunction DAQ devices
- ✔ Keysight Digital Multimeter (DMM) 33401A/33410A
- ✔ Fluke Calibrator 5220A/5702A
- ✔ Computer with Keysight IO Libraries Suites installed
- ✔ U2901A Terminal Block
- ✔ USB Mini-B Cable
- ✔ U2901A SCSI Cable

Follow the following steps to ensure the instrument gives accurate analog input readings and analog outputs.

1. Perform the self-calibration procedure. See “Self-Calibration”.
2. Perform the performance verification procedure. See “Calibration and Performance Verification Procedure”, “Analog input connection” for information on analog input connection and “Analog output connection” for information on analog output connection.
3. If the instrument gives accurate readings or accurate outputs, adjustment procedure is not necessary. If the instrument does not give accurate readings or accurate outputs, perform the adjustment procedure. See “Adjustment Procedures”.
4. After perform the adjustment procedure, repeat the self-calibration procedure and then perform the verification procedure.
5. If the instrument still does not give accurate readings or accurate outputs, repeat step 3 and step 4.

Types Of Signal Sources

Ground-referenced signal sources

A ground-referenced signal source is defined as a signal source that is connected in some way to the building's grounding system. This means that the signal source is connected to a common ground point with respect to the U2300A series DAQ (assume the host PC which is connected with DAQ is in the same power ground).

Floating signal sources

A floating signal source is a signal that is not connected to the building's grounding system. It is also a device with an isolated output. Example of floating signal sources are optical isolator output, transformer output, and thermocouple.

Input Configurations

Differential Input Mode

The differential input mode provides two inputs that respond to the difference of the signal voltage. The analog input of the U2300A series DAQ has its own reference ground or signal return path. The differential mode can be used for the common-mode noise rejection if the signal source is ground-referenced. The following figure shows the connection of ground-referenced signal sources under differential input mode.

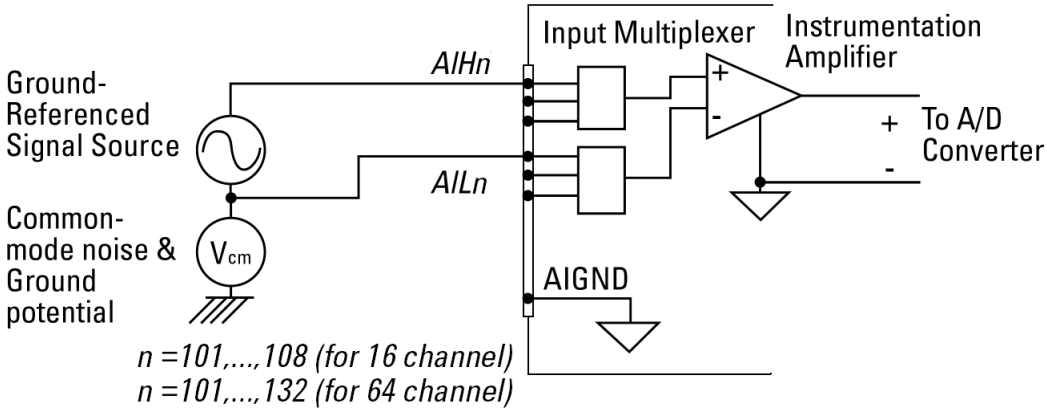

Figure 2-1 Ground-referenced source and differential input mode

The following figure illustrates the connection of a floating signal source to the U2300A series DAQ in differential input mode. For floating signal sources, additional resistor is needed at each channel to provide a bias return path. The resistor value is equivalent to about 100 times the source impedance. If the source impedance is less than 100 W, you can connect the negative polarity of the signal directly to AI_GND, as well as the negative input of the Instrumentation Amplifier. The noise couples in differential input mode are less compared to the single-ended mode.

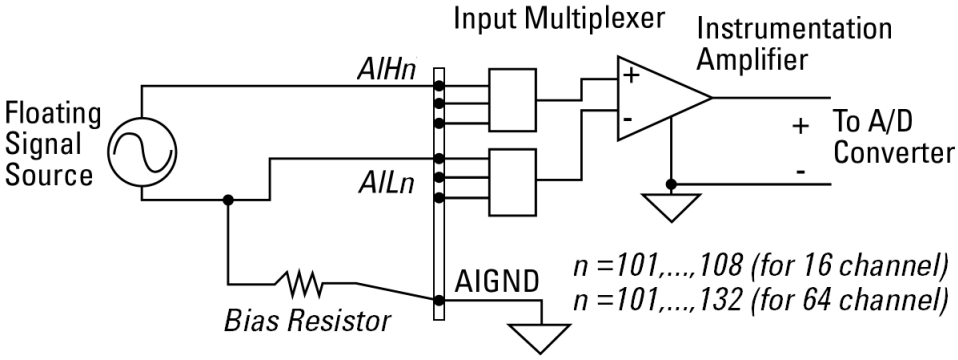

Figure 2-2 Floating source and differential input

NOTE

- Keysight U2300A series DAQ is designed with high input impedance. Please ensure that all the connection are connected properly before acquiring any data. Failing to do so may cause data fluctuation or erroneous readings.
- Unused pins at multiplexing DAQ inputs can be treated as floating source with infinite output impedance. Therefore, necessary grounding system is required in user application system.

Hardware Connection

The connection to verify the analog input readings and analog outputs are different. To verify the analog input readings, see "Analog input connection" for descriptions on the way to connect the instruments. To verify the analog outputs, see "Analog output connection" for descriptions on hardware setup.

Analog input connection

The equipments required for analog input connection are the DAQ device, fluke calibrator, terminal block, USB mini-B cable, and SCSI cable. Follow the step-by-step instruction below for analog input connection.

1 Connect the DAQ device to a PC with a USB mini-B cable and connect the DAQ device to a U2901A terminal block using the U2901A SCSI cable.

NOTE

- **Ensure that the PC has the DAQ device's driver and the Keysight IO Libraries 14.2 or higher installed. Note that the Keysight Measurement Manager software comes with the standard purchase of the U2500A series DAQ devices.**
- **If you do not have the DAQ device's driver and the Keysight IO Libraries 14.2 or higher installed, refer to the *Keysight U2500A Series Data Acquisition Devices and Keysight Measurement Manager Quick Start Guide*, for more information on the installation.**

2 Short all the DAQ device's analog input channels. Refer to ""Appendix A Connector Pins Configuration" on page 65" for the pins assignment.

3 Connect the DAQ device's analog input channels to the AIH channel calibrator output.

4 Connect the DAQ device's analog input AIL channel to the calibrator ground. See Figure 2-3. Note that the analog inputs shown in the figure uses U2531A as an example.

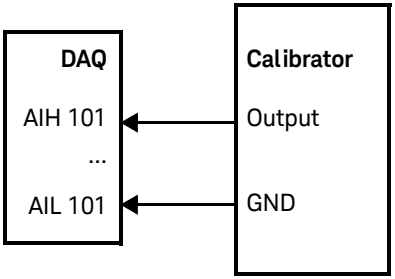

Figure 2-3 The analog input and calibrator connection

Setup diagram

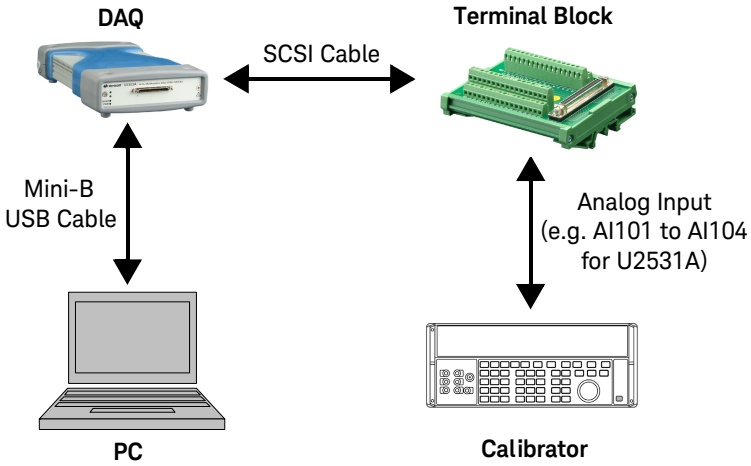

Figure 2-4 The analog input and calibrator connection

Analog output connection

The equipments required for analog output connection are the DAQ device, DMM, terminal block, USB mini-B cable, and SCSI cable. Follow the step-by-step instructions below for analog output connection.

1 Connect the DAQ device to a PC with a USB mini-B cable and connect the DAQ device to a U2901A terminal block using the U2901A SCSI cable.

NOTE

- **Ensure that the PC has the DAQ device's driver and the Keysight IO Libraries 14.2 or higher installed. Note that the Keysight Measurement Manager software comes with the standard purchase of the U2500A series DAQ devices.**
- **If you do not have the DAQ device's driver and the Keysight IO Libraries 14.2 or higher installed, refer to the *Keysight U2500A Series Data Acquisition Devices and Keysight Measurement Manager Quick Start Guide*, for more information on the installation.**

2 Connect a wire at each pin you would like to test on the U2901A terminal block. (Refer to "Appendix A Connector Pins Configuration" for the pins assignment)

3 Connect the DAQ device's analog output channel 1 (AO201) to the DMM input.

4 Connect the DAQ device's analog output ground (AO_GND) to DMM GND.

5 Repeat step 3 and step 4 for analog output channel 2 (AO202).

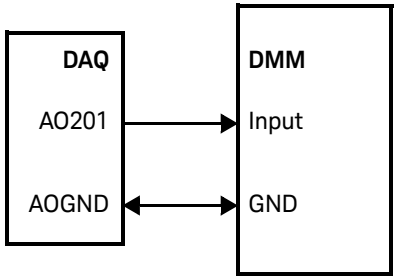

Figure 2-5 The analog output and DMM connection

Setup diagram

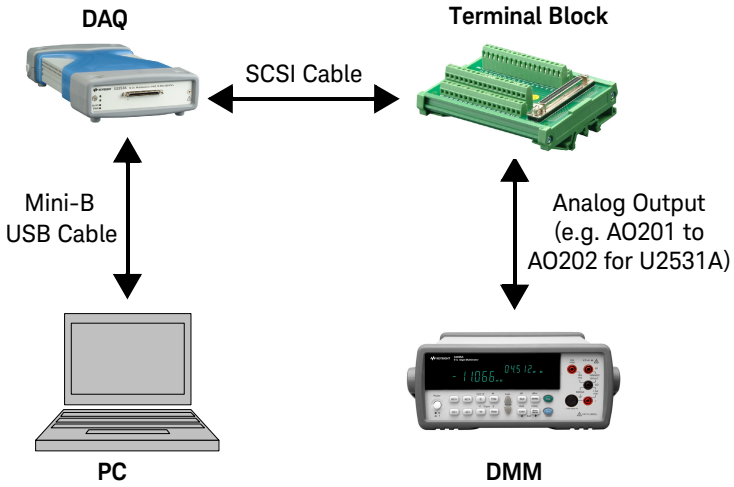

Figure 2-6 The analog output and DMM connection

Self-Calibration

Self-calibration can be operated using the following SCPI command via the Keysight Connection Expert.

```
CALibration:BEGin
```

In calibration mode, the command will initiate a voltage adjustment in sequence for the specified Digital Analog Converter (DAC) channel. This sequence sets a zero and gain adjustment constant for each DAC output.

The function of DAQ device will not carry on until the self-calibration has completed. You can query the status of the self-calibration performed using the following SCPI command.

```
*OPC?
```

Two ways of performing the self-calibration will be introduced in this section. The first option is to use the Keysight Connection Expert to send the SCPI commands and the second option is to use the Keysight Measurement Manager application software.

Option 1: Self-calibration with Keysight Connection Expert

WARNING

- **Unplug all cables that are connected to the DAQ device before performing self-calibration.**
- **Any cables connected to the DAQ device may cause the failure of the self-calibration process.**

1. Power on the DAQ and disconnect all connections from DAQ device. Warm it up for 30 minutes to ensure that it is operating in a stable condition.
2. Go to **Start > All Programs > Keysight IO Libraries Suite > Keysight Connection Expert** to launch the Keysight Connection Expert.

3 Connect the DAQ device to the PC with mini-B type USB cable. The connected DAQ device will be visible in the **Instrument I/O on this PC** panel as illustrated in Figure 2-7.

4 Select the DAQ device that you wish to send the SCPI commands to and then click the **Interactive IO** icon on the toolbar to launch the Keysight Interactive IO. See Figure 2-7.

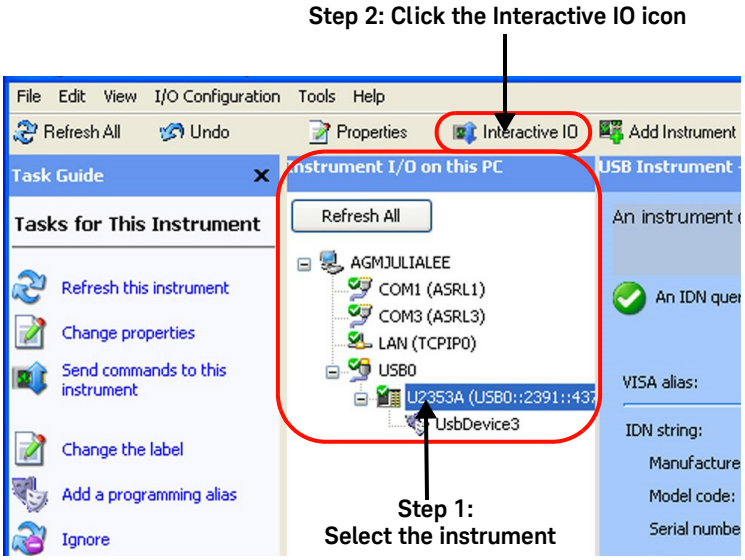

Figure 2-7 Launch the Interactive IO in Keysight Connection Expert

5 The **Keysight Interactive IO** dialog box will appear as shown in Figure 2-8. Click **Send & Read** to send the "`*IDN?`" default command. This instrument's response should appear in the **Instrument Session History** panel.

6 Successful communication between the Keysight Connection Expert and the connected hardware will be shown in the **Instrument Session History** panel. The users may now send other SCPI commands to the instrument.

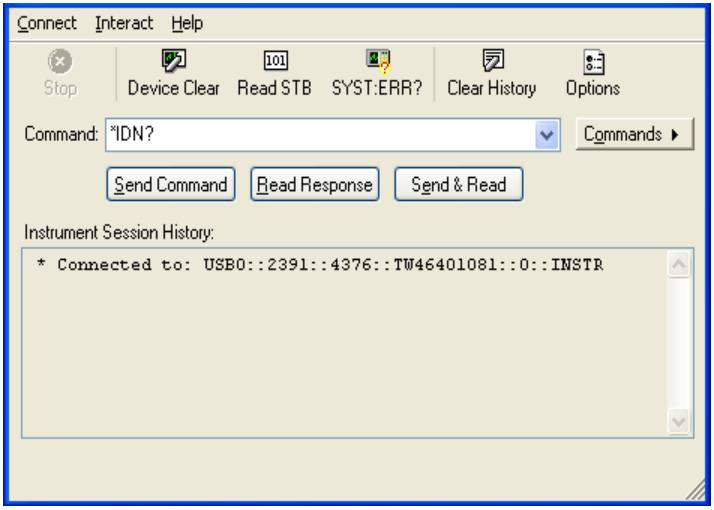

Figure 2-8 Interactive IO dialog box

7 Ensure that the DAQ device has been warmed up for 30 minutes. Send the SCPI commands "`*RST`" and "`*CLS`" to clear the register in DAQ device.

8 Send "`CAL:BEG`" to start the self-calibration process. This process may take a few minutes to complete.

9 Send "`*OPC?`" to check the operation complete status.

10 If "`*OPC?`" returns 1, send "`SYST:ERR?`" to check if any system error has occurred during the self-calibration process. If there is no system error, the self-calibration process is done. Otherwise, the self-calibration process is failed.

Option 2: Self-calibration with Keysight Measurement Manager

WARNING

- Unplug all cables that are connected to the DAQ device before performing self-calibration.
- Any cables connected to the DAQ device may cause the failure of the self-calibration process.

1. Power on the DAQ device and disconnect all connections from it. Warm it up for 30 minutes to ensure that it is operating in a stable condition.
2. Connect the DAQ device to the PC with mini-B type USB cable. Launch the Keysight Measurement Manager and select the DAQ device you wish to do the self-calibration process.
3. Go to **Tools** and select **Self Calibration**.
4. The **Self Calibration Form** dialog box will appear as shown below.

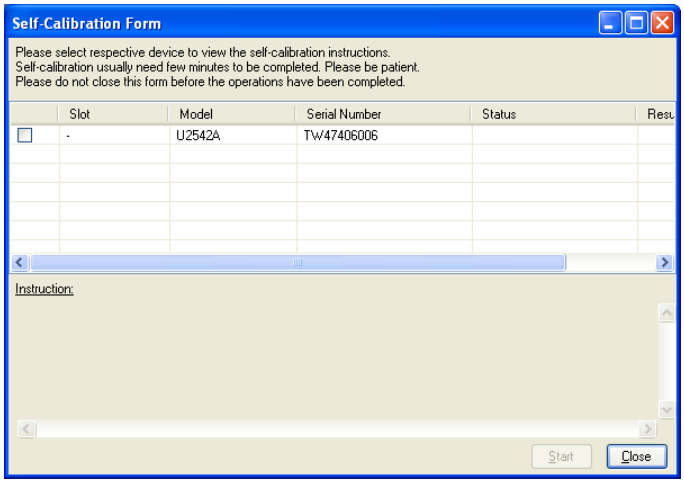

Figure 2-9 Self Calibration Form dialog box in Keysight Measurement Manager

5. Select the instrument that you would like to perform self-calibration and the **Start** button will be enabled. Click **Start** to proceed. See Figure 2-10.

6 The calibration process will take a few minutes to be completed. Once done, the status and results of the process will be displayed as shown in Figure 2-11.

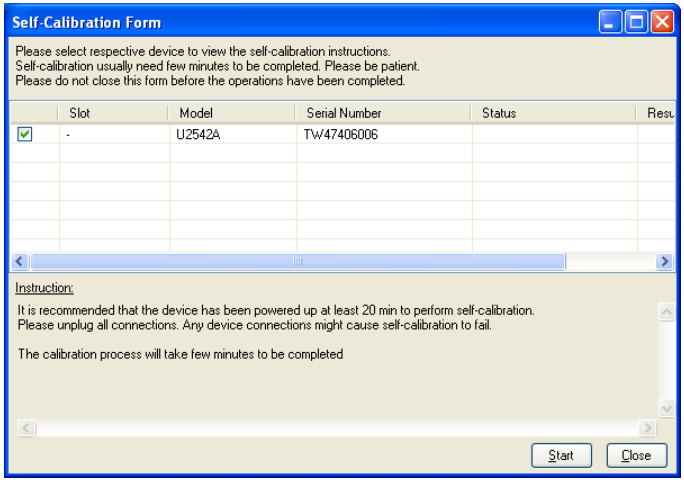

Figure 2-10 Self Calibration Form dialog box in Keysight Measurement Manager with a device being selected

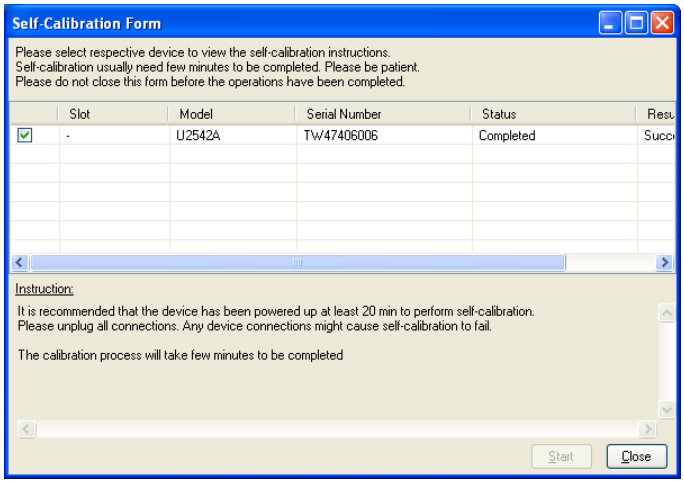

Figure 2-11 Self Calibration Form dialog box in Keysight Measurement Manaer showing the status and resultof the self-calibration process

Calibration and Performance Verification Procedure

Prior to calibrate the instrument, check the performance of the instrument to see if any adjustment is required, see “Adjustment Procedures”.

This is to ensure that the DAQ device gives accurate readings or outputs. The performance verification procedure for analog input and analog output are automated and are verify using the *Automated Calibration* software.

Adjustment Procedures

If in the performance verification procedure is not accurate, adjustment procedure is required. The following flowchart shows the steps for 5 V calibration.

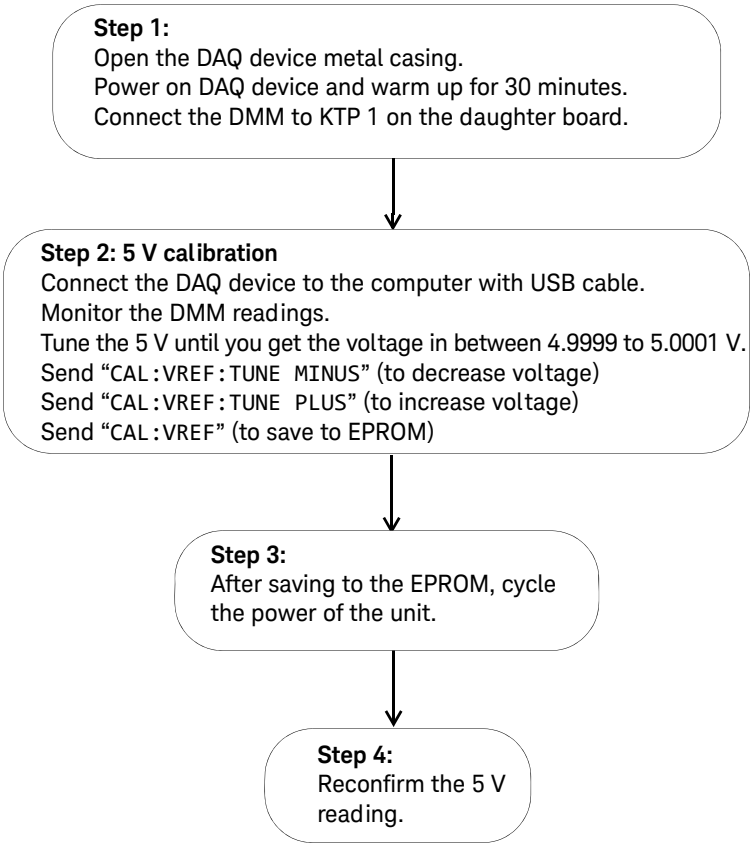

Figure 2-12 5 V calibration steps

Table 2-1 Step-by-step descriptions for 5 V calibration flow chart

Step	Descriptions
Step 1	Before power on the DAQ device, open the DAQ device's metal casing. Refer to ""Dismantle Procedures" on page 53" for more information to disassemble the unit. Unscrew the following indicated screw to remove the front metal piece. Then, power on the DAQ device and warm it up for approximately 30 minutes. Connect the DMM to **KTP 1** as shown in figure below on the daughter board. 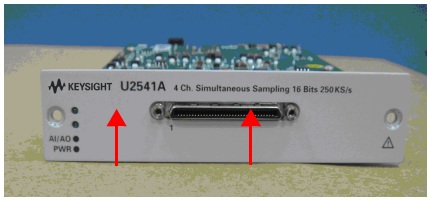 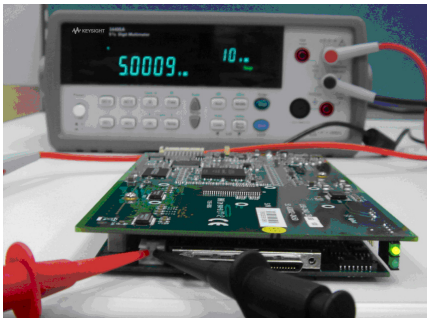
Step 2	Ensure that the DAQ device's driver is installed in the computer before connecting it to the computer. The driver can be obtained from the *Keysight USB Modular Instrument U2500A & U2600A Series Product Reference CD-ROM*. Measure the voltage difference at **KTP 1** with the DMM. If the measured voltage is more than 5 V, send the command "`CAL:VREF:TUNE MINUS`" to decrease the voltage, otherwise if the measured voltage is less than 5 V, send the command "`CAL:VREF:TUNE PLUS`" to increase the voltage. Tune the voltage until the measured voltage is in the range of 4.9999 V and 5.0001 V. When the tuning process is done, send "`CAL:VREF`" to save it in the EPROM.
Step 3	Power cycle the DAQ device by turning on and off the DAQ device.
Step 4	Measure the voltage at **KTP 1** again to ensure the measured voltage is in the range of 4.9999 V to 5.0001 V. If there is any problem occurs, the DMM will not measure the voltage in the specified range. Proceed to self calibration procedure.

Calibration Procedure

The calibration and test steps involve 3 steps:

1. Step1: On-board 5V calibration
2. Step2: Self calibration
3. Step3: DAQ configuration and verification test

Step1: On-board 5V calibration

The flow chart below shows the steps for 5 V calibration.

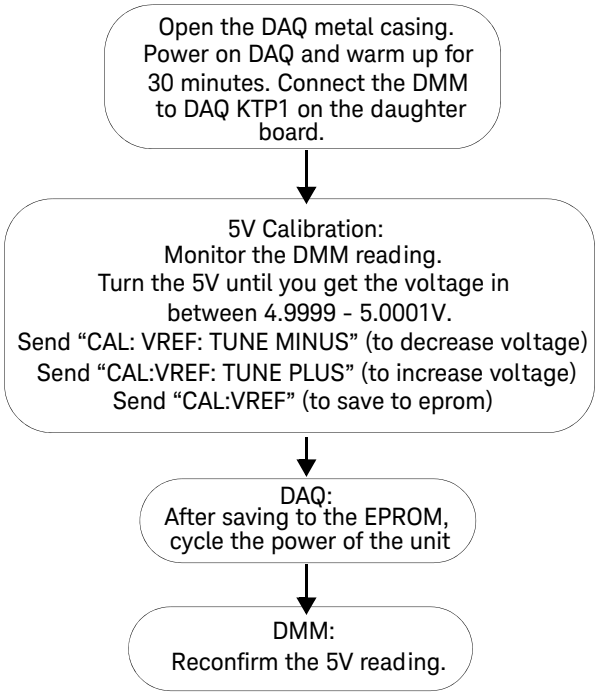

Figure 2-13 On-board 5 V calibration steps

Step2: Self calibration

The following flow chart shows the steps and SCPI commmands for the self calibration process.

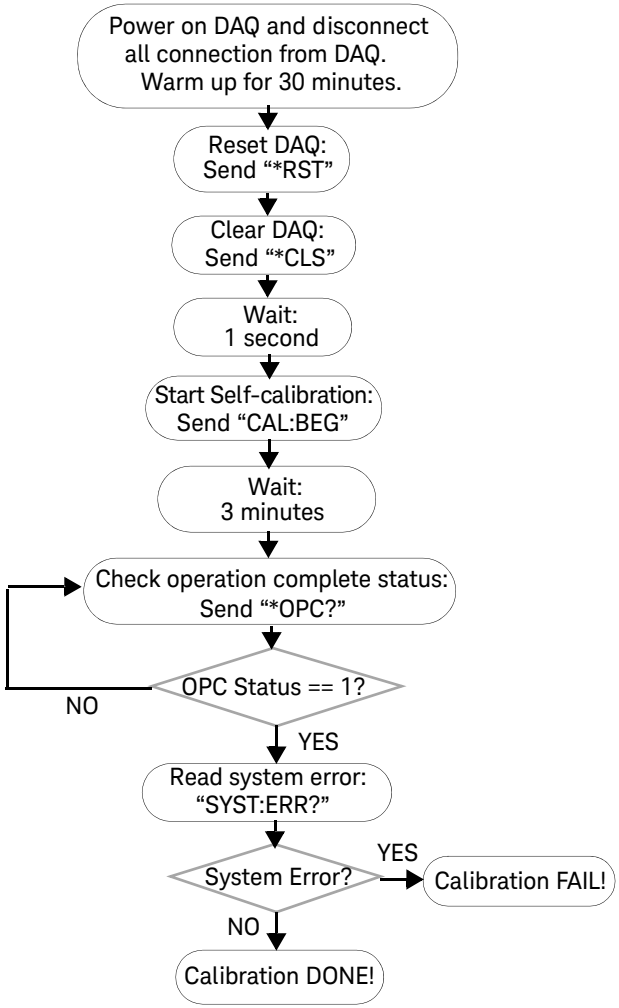

Figure 2-14 Self calibration steps and SCPI commands

Step3: DAQ configuration and verification test

The DAQ settings and test steps for analog input and analog output are shown in the following flow charts.

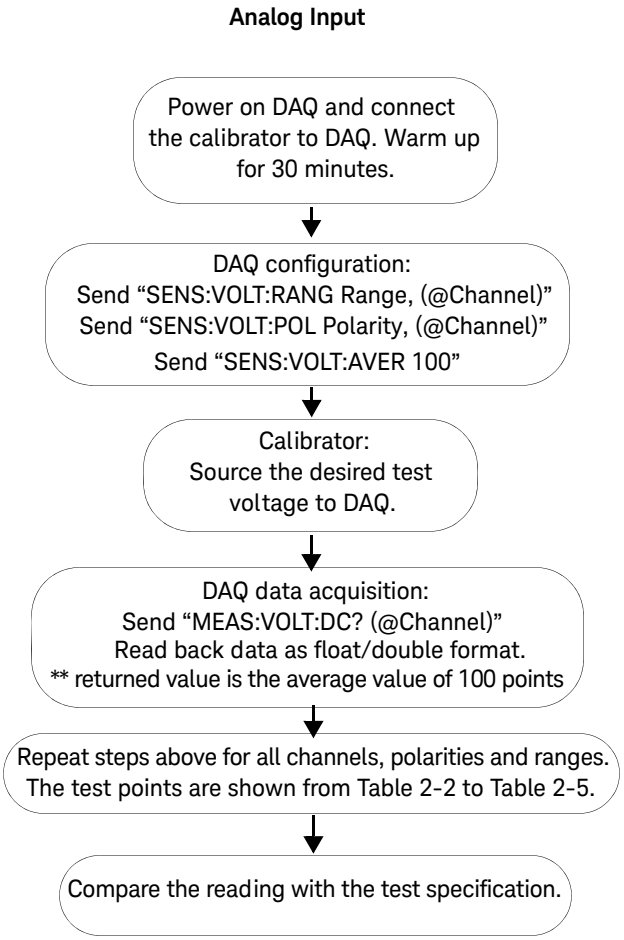

Figure 2-15 DAQ settings and test steps for analog input

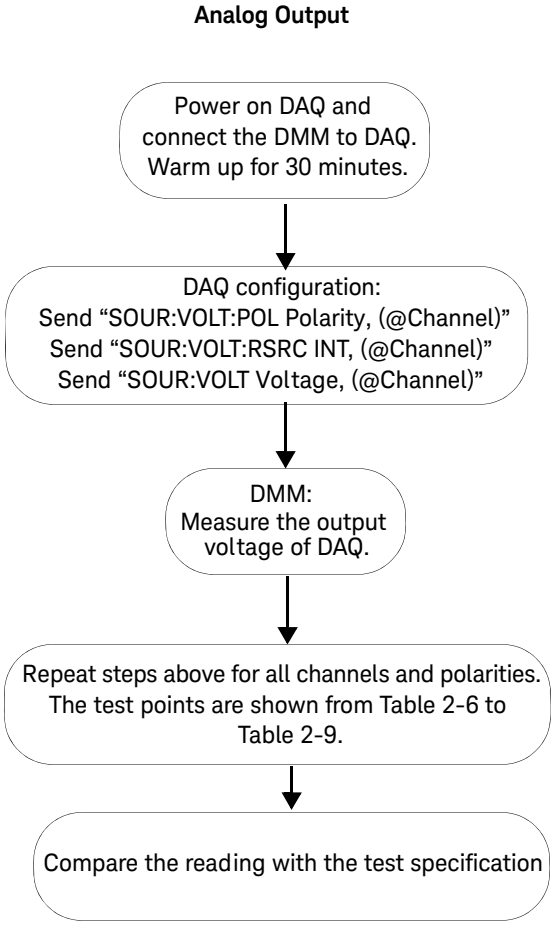

Figure 2-16 DAQ setting and test steps for analog output

Performance Verification Steps

Analog input

1. Connect the DAQ device to a PC with a USB mini-B cable and connect the DAQ device to a U2901A terminal block using the U2901A SCSI cable.
2. Connect the DAQ device's analog input AIH channel to calibrator output and connect the analog input AIL channel to calibrator ground. Refer to "Appendix A Connector Pins Configuration" on page 65 for pin assignment. See Figure 2-3 for the hardware connection.

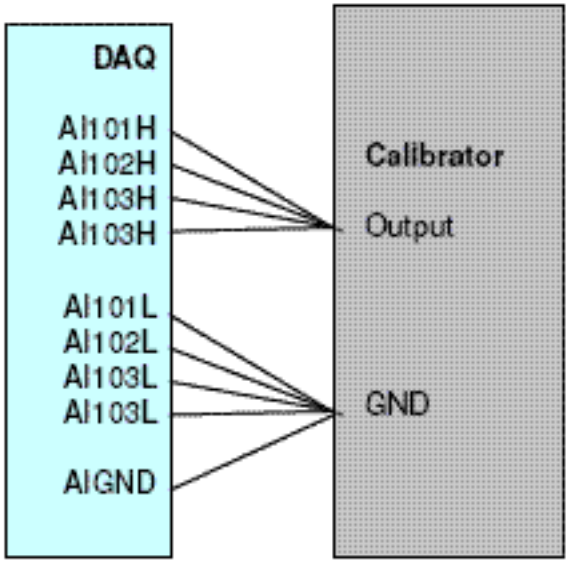

Figure 2-17 Calibrator output hardware connection

NOTE

- The analog inputs shown in the figure uses U2541A as an example only.
- Power on the DAQ device and warm it up for approximately 30 minutes
- Follow the following procedures to verify the Offset error and gain error.

Follow the following procedures to verify offset error:

1. Supply an output voltage from calibrator to analog input channels of the DAQ device. Refer to “Test Point” column in the tables below for the output voltage setting from the calibrator.
2. Send SCPI commands below for measurement at voltage range BIP 10 V at test point 0 V.

```
*CLS; *RST
SENS:VOLT:RANG 10, (@101,102,103,104)
SENS:VOLT:POL BIP, (@101,102,103,104)
SENS:VOLT:AVER 100,
MEAS:VOLT:DC? (@101,102,103,104)
```

3. Record the measurement reading from DAQ into the table below and calculate the offset error with the formula stated below.

   Test Result, Offset Error = DAQ Reading - Calibrator Source Voltage
4. Repeat the steps 1 to 3 for voltage range and test point show in table below.

Table 2-2 Offset error for U2541A/U2542A

Offset Error (V)	Setting	Range (V)		Test Point (V)	Test Limit (V)		Actual Measurement			
	Polarity	Min	Max	Value	Lower Limit	Upper Limit	CH 101	CH 102	CH 103	CH 104
0.001	BIP	–10	10	0.00000	–0.00100	0.00100				
0.001	BIP	–5	5	0.00000	–0.00100	0.00100				
0.001	BIP	–2.5	2.5	0.00000	–0.00100	0.00100				
0.001	BIP	–1.25	–1.25	0.00000	–0.00100	0.00100				
0.001	UNIP	0	10	5.00000	4.99900	5.00100				
0.001	UNIP	0	5	2.50000	2.49900	2.50100				
0.001	UNIP	0	2.5	1.25000	1.24900	1.25100				
0.001	UNIP	0	1.25	0.62500	0.62400	0.62600				

Table 2-3 Offset error for U2531A

Offset Error (V)	Setting	Range (V)		Test Point (V)	Test Limit (V)		Actual Measurement			
	Polarity	Min	Max	Value	Lower Limit	Upper Limit	CH 101	CH 102	CH 103	CH 104
0.002	BIP	–10	10	0.00000	–0.00200	0.00200				
0.0015	BIP	–5	5	0.00000	–0.00150	0.00150				
0.001	BIP	–2.5	2.5	0.00000	–0.00100	0.00100				
0.001	BIP	–1.25	–1.25	0.00000	–0.00100	0.00100				
0.002	UNIP	0	10	5.00000	4.99800	5.00200				
0.0015	UNIP	0	5	2.50000	2.49850	2.50150				
0.001	UNIP	0	2.5	1.25000	1.24900	1.25100				
0.001	UNIP	0	1.25	0.62500	0.62400	0.62600				

Follow the following procedures to verify gain error:

1 Supply an output voltage from the calibrator to the analog input channels. Refer to “Test Point” on table below for the output voltage setting from the calibrator.

2 Send SCPI commands below for measurement at voltage range BIP 10V at test point 0V.

```
*CLS; *RST
SENS:VOLT:RANG 10, (@101,102,103,104)
SENS:VOLT:POL BIP, (@101,102,103,104)
SENS:VOLT:AVER 100
MEAS:VOLT:DC? (@101,102,103,104)
```

3 Record the measurement reading from DAQ into the table below and calculate the gain error with the formula stated below.

Test Result, Gain Error = DAQ Reading - Offset Error

4 Repeat the steps 1 to 3 for voltage range and test point show in the following table.

Table 2-4 Gain error for U2541A/U2542A

	Gain Error (V)	Setting	Range (V)		Test Point (V)	Test Limit (V)		Actual Measurement			
		Polarity	Min	Max	Value	Lower Limit	Upper Limit	CH 101	CH 102	CH 103	CH 104
Positive Gain	0.001	BIP	–10	10	9.98779	9.98679	9.98879				
Negative Gain	0.001	BIP	–10	10	–9.98779	–9.98879	–9.98679				
Positive Gain	0.001	BIP	–5	5	4.99390	4.99290	4.99490				
Negative Gain	0.001	BIP	–5	5	-4.99390	–4.99490	–4.99290				
Positive Gain	0.001	BIP	–2.5	2.5	2.49695	2.49595	2.49795				
Negative Gain	0.001	BIP	–2.5	2.5	–2.49695	–2.49795	–2.49595				
Positive Gain	0.001	BIP	–1.25	–1.25	1.24847	1.24747	1.24947				
Negative Gain	0.001	BIP	–1.25	–1.25	–1.24847	–1.24947	–1.24747				
Positive Gain	0.002	UNIP	0	10	9.99390	9.99190	9.99590				
Negative Gain	0.002	UNIP	0	10	0.00610	0.00410	0.00810				
Positive Gain	0.001	UNIP	0	5	4.99695	4.99595	4.99795				
Negative Gain	0.001	UNIP	0	5	0.00305	0.00205	0.00405				
Positive Gain	0.001	UNIP	0	2.5	2.49847	2.49747	2.49947				
Negative Gain	0.001	UNIP	0	2.5	0.00153	0.00053	0.00253				
Positive Gain	0.001	UNIP	0	1.25	1.24924	1.24824	1.25024				
Negative Gain	0.001	UNIP	0	1.25	0.00076	–0.00024	0.00176				

Table 2-5 Gain error for U2531A

	Gain Error (V)	Setting	Range (V)		Test Point (V)	Test Limit (V)		Actual Measurement			
		Polarity	Min	Max	Value	Lower Limit	Upper Limit	CH 101	CH 102	CH 103	CH 104
Positive Gain	0.006	BIP	–10	10	9.95117	9.94517	9.95717				
Negative Gain	0.006	BIP	–10	10	–9.95117	–9.95717	–9.94517				
Positive Gain	0.003	BIP	–5	5	4.97559	4.97259	4.97859				
Negative Gain	0.003	BIP	–5	5	– 4.97559	–4.97859	–4.97259				
Positive Gain	0.002	BIP	–2.5	2.5	2.48779	2.48579	2.49879				
Negative Gain	0.002	BIP	–2.5	2.5	– 2.48779	–2.48979	–2.48579				
Positive Gain	0.001	BIP	–1.25	–1.25	1.24390	1.24290	1.24490				
Negative Gain	0.001	BIP	–1.25	–1.25	–1.24390	–1.24490	–1.24290				
Positive Gain	0.003	UNIP	0	10	9.97559	9.97259	9.97859				
Negative Gain	0.003	UNIP	0	10	0.02441	0.02141	0.02741				
Positive Gain	0.0015	UNIP	0	5	4.98779	4.98629	4.98929				
Negative Gain	0.0015	UNIP	0	5	0.01221	0.01071	0.01371				
Positive Gain	0.001	UNIP	0	2.5	2.49390	2.49290	2.49490				
Negative Gain	0.001	UNIP	0	2.5	0.00610	0.00510	0.00710				
Positive Gain	0.001	UNIP	0	1.25	1.24695	1.24595	1.24795				
Negative Gain	0.001	UNIP	0	1.25	0.00305	0.00205	0.00405				

Analog output

1. Connect the DAQ device to a PC with a USB mini-B cable and connect the DAQ device to a U2901A terminal block using the U2901A SCSI cable.
2. Connect a wire to both of the analog pin you on the U2901A terminal block. (Refer to "Appendix A Connector Pins Configuration" on page 65 for the pins assignment)
3. Prepare two units of 34401A/34410A DMM device
4. Connect the DAQ device's analog output channel (AO201) to the first DMM input and AO_GND to the first DMM GND. Repeat the connection for channel AO202 to the second DMM device. See Figure 2-18 and Figure 2-19 for the connection.

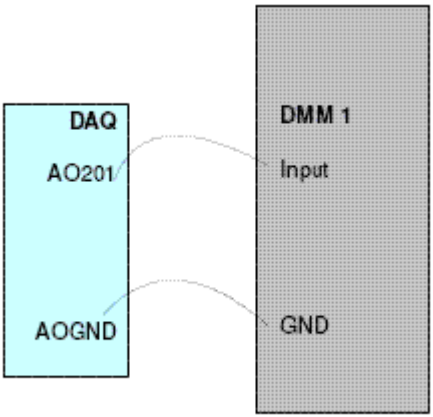

Figure 2-18 Analog output channel A0201 with DMM 1

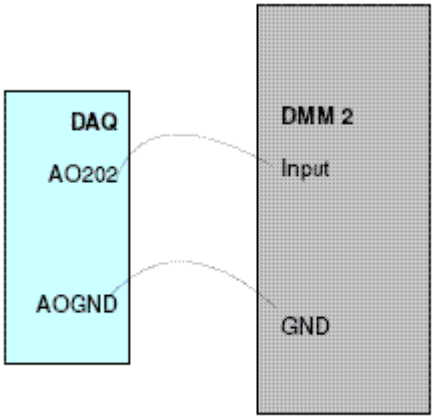

Figure 2-19 Analog output channel for A0202 for DMM 2

Follow the following procedures to verify offset voltage:

1 Sending the SCPI commands below for measurement at voltage range BIP 10V:

```
*CLS; *RST
SOUR:VOLT:POL BIP, (@201,202)
SOUR:VOLT:RSRC INT, (@201,202)
SOUR:VOLT 0.0000, (@201,202)
```

2 Measure the output voltage from both of the DMM1 and DMM2.

3 Record the measurement reading from DMM into the table below and calculate the offset error with the formula stated below.

Test Result, Offset Error = DMM Reading - DAQ Source Voltage

4 Repeat the steps 1 to 3 for voltage range and test point show in table below.

Table 2-6 Offset error for U2541A/U2542A

Offset Error (V)	Setting	Range (V)		Test Point (V)	Test Limit (V)		Actual Measurement	
	Polarity	Min	Max	Value	Lower Limit	Upper Limit	Channel 201	Channel 202
0.001	BIP	–10	10	0.0000	–0.0010	0.0010		
0.001	UNIP	0	10	0.0000	–0.0010	0.0010		

Table 2-7 Offset error for U2531A

Offset Error (V)	Setting	Range (V)		Test Point (V)	Test Limit (V)		Actual Measurement	
	Polarity	Min	Max	Value	Lower Limit	Upper Limit	Channel 201	Channel 202
0.001	BIP	–10	10	0.0000	–0.0010	0.0010		
0.001	UNIP	0	10	0.0000	–0.0010	0.0010		

Follow the following procedures to verify gain error:

1. Send SCPI commands below for measurement at voltage range BIP 10V :

   ```
   *CLS; *RST
   SOUR:VOLT:POL BIP, (@201,202)
   SOUR:VOLT:RSRC INT, (@201,202)
   SOUR:VOLT 0.0000, (@201,202)
   ```

2. Measure the output voltage at DMM1 and DMM2.
3. Record the measurement reading from DMM into the table below and calculate the gain error with the formula stated below.

   Test Result, Gain Error = DMM Reading - Offset Error

4. Repeat the steps 1 to 3 for voltage range and test point show in table below.

Table 2-8 Gain error for U2541/U2542A.

	Gain Error (V)	Setting	Range (V)		Test Point (V)	Test Limit (V)		Actual Measurement	
		Polarity	Min	Max	Value	Lower Limit	Upper Limit	Channel 201	Channel 202
Positive Gain	0.002	BIP	–10	10	9.9951	9.9931	9.9971		
Negative Gain	0.002	BIP	–10	10	–10.0000	–10.0020	–9.9980		
Positive Gain	0.002	UNIP	0	10	9.9976	9.9956	9.9996		

Table 2-9 Gain error for U2531A

	Gain Error (V)	Setting	Range (V)		Test Point (V)	Test Limit (V)		Actual Measurement	
		Polarity	Min	Max	Value	Lower Limit	Upper Limit	Channel 201	Channel 202
Positive Gain	0.003	BIP	–10	10	9.9951	9.9921	9.9981		
Negative Gain	0.003	BIP	–10	10	–10.0000	–10.0030	–9.9970		
Positive Gain	0.003	UNIP	0	10	9.9976	9.9946	10.0006		

A/D Data Conversion

A/D data converter converts analog voltage into digital information. This section illustrates the format of acquired raw data from the A/D conversion.

The returned data is in a binary block format. Below is an example of the binary block format for three AI channels (CH 101, CH 102, and CH 103). The data arrangement in data buffer is from lower CH 101 to higher channel CH 103.

ASCII header	Numbers in hexadecimal								
#800001000	**<byte>**	**<byte>**	**<byte>**	**<byte>**	**<byte>**	**<byte>**	**<byte>**	**<byte>**	**...**
Data length indicator. "#8" means the following 8 bytes (0000 1000) indicates the actual data length, not actual data. E.g. for #800001000, "00001000" is the data length translated to 1000 bytes of raw data, which is 500 points of measured data.	1st data LSB	1st data MSB	1st data LSB	1st data MSB	1st data LSB	1st data MSB	2nd data LSB	2nd data MSB	...
	CH 101		CH 102		CH 103		CH 101		...

The measured samples in continuous mode acquisition is stored in Little-Endian format. In other words, each measured sample is returned in a way that its least significant byte (LSB) is ordered first; following by its most significant byte (MSB).

16-bit Data Format

LSB	MSB
DDDD DDDD	DDDD DDDD

14-bit Data Format

LSB	MSB
DDDD DDXX	DDDD DDDD

D - Data bits

X - Unused bits

Raw data conversion

To convert the data into actual float number, we need the voltage range and polarity information. Below are the calculations on the raw data conversion for both bipolar and unipolar.

To perform a sample calculation of the conversion, take U2541A as example. Assume that the voltage level is set in the range from 0 V to 10 V for unipolar setting; and –10 V to 10 V for bipolar setting. Sample binary block is as follow.

#800001000	**<byte>**	**<byte>**	**<byte>**	**<byte>**	**<byte>**	**<byte>**	**<byte>**	**<byte>**	**...**
	1st data LSB	1st data MSB	1st data LSB	1st data MSB	1st data LSB	1st data MSB	2nd data LSB	2nd data MSB	...
	CH 101		CH 102		CH 103		CH 101		...
Little Endian Format									
#800001000	e0	31	ff	cf	ff	ca	ff	c4	
Convert to Decimal Format									
#800001000	12768		53247		51967		50431		

The resolution for U2541A is 16 bits and the Int16 measured value return by DAQ is 12768. The binary number for 12768 is 00110001 11100000. However, since the data is stored in Little-Endian format, the 16 bits binary read back calculation will be as follow.

	LSB	**MSB**
Hex value:	**e0**	**31**
Binary value:	**<11100000>**	**<00110001>**
Decimal value:	**12768**	

NOTE The raw data provided by U2500A series DAQ devices is in the byte order of LSB first.

Bipolar:

$$\text{Converted value} = \left(\frac{2 \times \text{Int16 value}}{2^{\text{resolution}}}\right) \times \text{Range}$$

$$\text{Example of converted value} = \left(\frac{2 \times 12768}{2^{16}}\right) \times 10 = 3.896\ \text{V}$$

Unipolar:

$$\text{Converted value} = \left(\frac{\text{Int16 value}}{2^{\text{resolution}}} + 0.5\right) \times \text{Range}$$

$$\text{Example of converted value} = \left(\frac{12768}{2^{16}} + 0.5\right) \times 10 = 6.948\ \text{V}$$

NOTE **The converted value is of float type. As such, you may need to type cast the Int16 value to float in your programming environment.**

To perform a sample calculation of the conversion, take U2531A as example. Assume that the voltage level is set in the range from 0 V to 10 V for unipolar setting; and –10 V to 10 V for bipolar setting.

The resolution for U2531A is 14 bits and the Int12 measured value return by DAQ is 12768. The binary number for 12768 is 00110001 11100000. However, since the data is stored in Little-Endian format, the 14 bits binary read back calculation will be as follow.

	LSB	MSB
Hex value:	**e0**	**31**
Binary value:	**‹11100000›**	**‹00110001›**
Decimal value:	**12768**	

There are unused bits in the 14-bit data format. Therefore, there is a need to perform a 2-bit right shift operation. Hence, the 14 bits binary read back calculation will be as follows.

LSB MSB
‹01111100› ‹00001100›
= 3192

NOTE The raw data provided by U2500A series DAQ devices is in the byte order of LSB first.

Bipolar:

$$\text{Converted value} = \left(\frac{2 \times \text{Int16 value}}{2^{\text{resolution}}}\right) \times \text{Range}$$

$$\text{Example of converted value} = \left(\frac{2 \times 3192}{2^{14}}\right) \times 10 = 3.896\ \text{V}$$

Unipolar:

$$\text{Converted value} = \left(\frac{\text{Int16 value}}{2^{\text{resolution}}} + 0.5\right) \times \text{Range}$$

$$\text{Example of converted value} = \left(\frac{3192}{2^{14}} + 0.5\right) \times 10 = 6.948\ \text{V}$$

NOTE

- The converted value is of float type. As such, you may need to type cast the Int14 value to float in your programming environment.
- For U2531A, there is a need to perform a 2-bit right shift operation. This is because it is equipped with 14-bit ADC and the last 2 bits are truncated.

THIS PAGE HAS BEEN INTENTIONALLY LEFT BLANK.

3 Dismantle Procedures

General Disassemble 54
Replacement Parts 58

This chapter describes the step-by-step disassemble procedures and list the available replacement parts for U2500A series DAQ devices.

General Disassemble

This chapter provides the step-by-step guide on how to dismantle the module and install the replacement assembly. To assemble back the module, follow the instructions in reverse order.

NOTE **The parts shown in the following figures are representative and may look different than what you have in your module.**

The removable assemblies include:

- Plastic casing
- Metal casing
- Rear metal casing
- Front metal casing, which is attached to the carrier board and measurement board

Mechanical disassemble

Follow the instructions in this section for the instrument disassemble process.

Step 1: Pull the bumper out to remove the plastic casing.

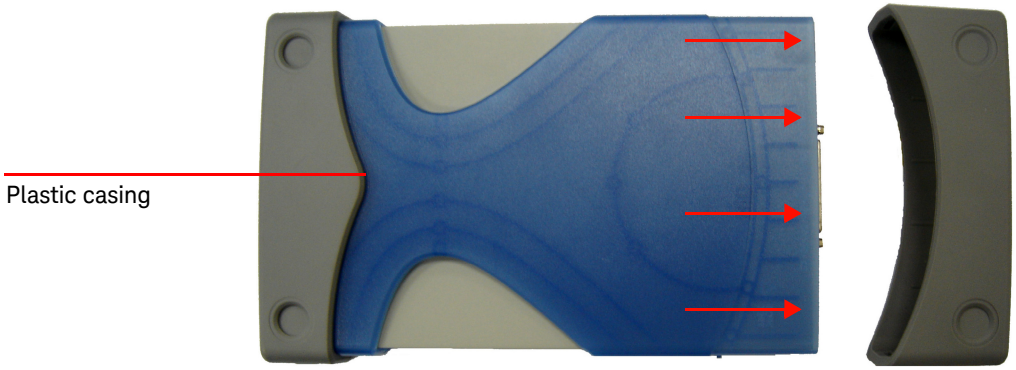

Step 2: Flip the plastic casing open.

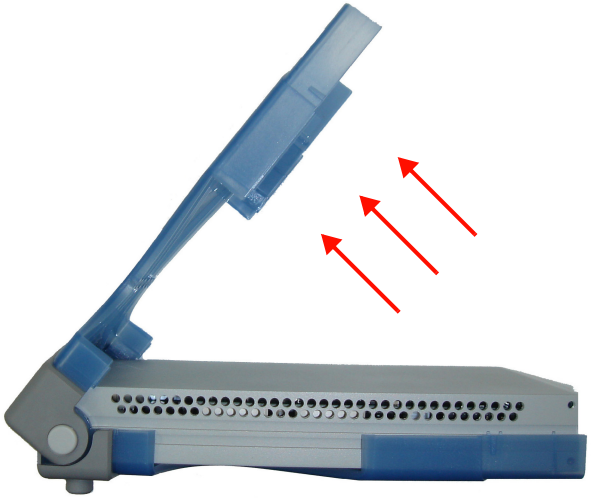

Step 3: Slide the metal casing out of the plastic casing.

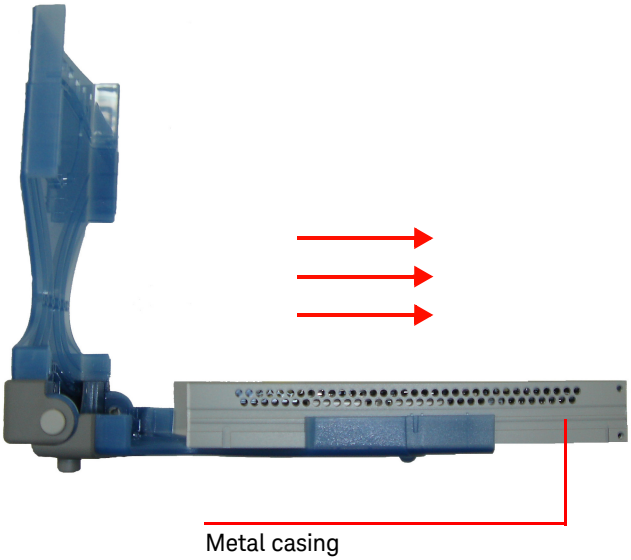

Step 4: Unscrew all the following indicated screws from metal casing.

Step 5: Gently pull the front metal piece out, which is attached to the carrier and measurement boards.

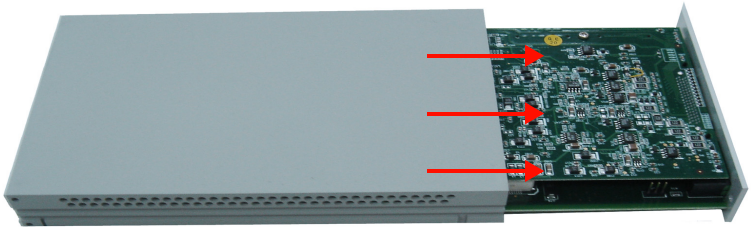

Step 6: Unscrew all the following indicated screws from the metal casing and remove the rear metal piece.

Disassembled parts:

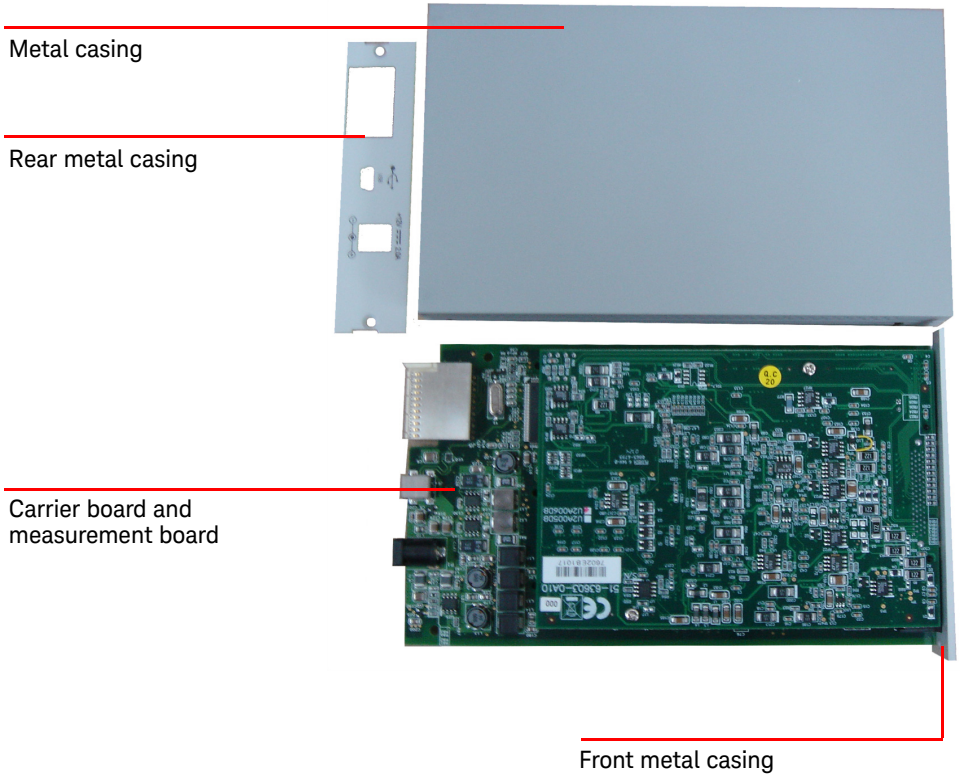

Replacement Parts

This section provides the information of orderable replacement parts for the U2500A series DAQ devices. You can order replacement parts through Keysight's website or you can contact the nearest Keysight Sales Office or Service Centre. To search for the replacement part number online, follow the steps below.

1 Launch your Internet Explorer to access Keysight's website (www.keysight.com).

2 On the technical support panel, select **Test & Measurement** under the **Parts Information** selection as shown below.

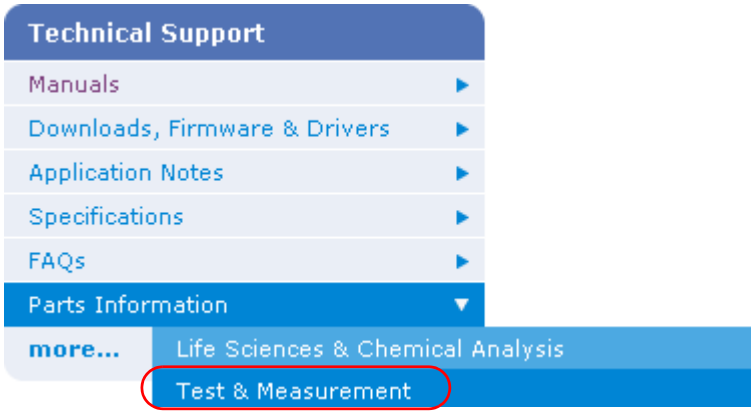

3 You can search for the replacement parts by entering a specific replacement part number or by instruments.

   a To search by part number, type the replacement part number in the text box as shown below.

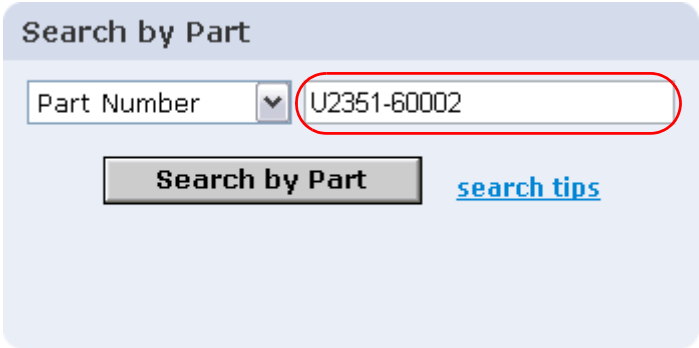

b To search by instrument, type the model number in the text box and click on **View Parts** to select a particular replacement part.

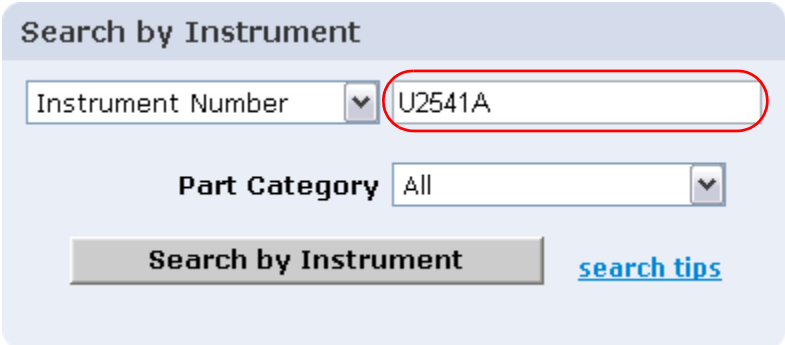

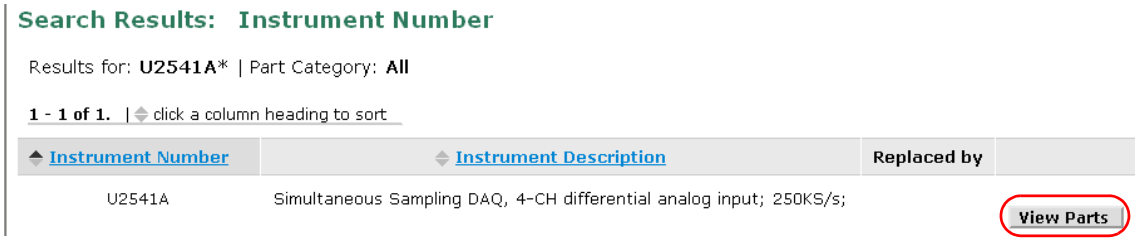

THIS PAGE HAS BEEN INTENTIONALLY LEFT BLANK.

4 Troubleshooting and Self-Test Procedures

Troubleshooting 62
Self-Test Procedures 63

This chapter provides the information on general troubleshooting and self-test procedures.

Troubleshooting

This section provides suggestions for solving general problems that you may encounter with the instrument. It guides you on what to check in the following situations:

1. Power Indicator LED is not lit

   Verify that the AC power cord is connected to the power inlet in the DAQ device.

2. Power Indicator LED is lit but the AO/ AI Indicator LED is not lit

   Verify that the USB cable is connected to the PC and the USB inlet in the DAQ device.

3. Power Indicator LED is lit and AO/ AI Indicator LED is lit

   Verify if the SCPI commands are correct with "`SYSTem:ERRor?`" command.

4. Power Indicator LED is flashing

   Verify that the green LED on the AC/DC adapter is steady. If the LED continues to flash, then there is a hardware defect. Please contact the Keysight Service Center for repair.

   If the Keysight U2500A Series USB Multifunction DAQ module is installed in the U2781A 6-slot mainframe, then remove it temporarily and use the AC/DC adapter shipped with the Keysight U2500A Series USB Multifunction DAQ module to power it up.

Refer to the *Keysight U2500A Series USB Simultaneous Sampling Multifunction Data Acquisition Devices Programmer's Reference* for SCPI error messages.

NOTE **If there is no response from the instrument, contact the nearest Keysight Service Center to obtain further assistance.**

Self-Test Procedures

WARNING Do not connect any cables and terminal block prior to performing self-test procedures.

1. Go to **Start > All Programs > Keysight IO Libraries Suite > Keysight Connection Expert** to launch the Keysight Connection Expert.
2. Go to **Start > All Programs > Keysight T&M Toolkit > Keysight Interactive IO** to launch the Interactive I/O dialog box.
3. Send the SCPI command "`*TST?`" to the instrument to start perform the self-test of the instrument.
4. The command will return either "`+0`" to indicate all tests passes or "`+1`" to indicate one or more tests failed.
5. If the command returns "`+1`", apply SCPI command "`SYSTem:ERRor?`" to enquire the error message.

NOTE Refer to *Keysight U2500A Series USB Simultaneous Sampling Multifunction Data Acquisition Devices Programmer's Reference* for SCPI error messages.

THIS PAGE HAS BEEN INTENTIONALLY LEFT BLANK.

A Appendix A Connector Pins Configuration

Introduction 66
Connector Pins Configuration for U2531A/U2541A/U2542A 67
55-pin Connector (J1) Pins Configuration 69

This appendix attached the pins configuration for all the U2500A series DAQ devices.

Introduction

The U2500A series USB simultaneous sampling multifunction data acquisition (DAQ) devices are equipped with 68-pin female VHDCI type connector. The connector pins configuration for all of the U2500A series DAQ devices are provided in this chapter.

When the DAQ module is used in a modular instrument chassis (U2781A), see Figure A-1 for the pins numbering. When the DAQ module is used as a standalone unit, see Figure A-2.

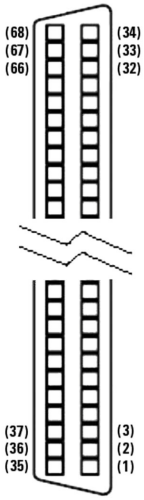

Figure A-1 Connector in vertical view

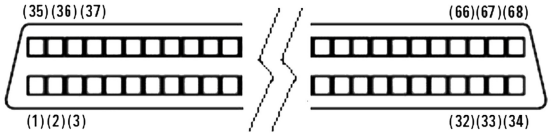

Figure A-2 Connector in horizontal view

Connector Pins Configuration for U2531A/U2541A/U2542A

AIH101	1	35	AIL 101
AIH102	2	36	AIL 102
AIH103	3	37	AIL 103
AIH104	4	38	AIL 104
EXTA_TRIG	5	39	AI_GND
AO202	6	40	AO_GND
AO201	7	41	AO_GND
AO_EXT_REF	8	42	AO_GND
RESERVED	9	43	RESERVED
RESERVED	10	44	RESERVED
RESERVED	11	45	RESERVED
RESERVED	12	46	RESERVED
RESERVED	13	47	EXTD_AO_TRIG
RESERVED	14	48	EXTD_AI_TRIG
COUNT302_CLK	15	49	D_GND
COUNT301_CLK	16	50	D_GND
COUNT301_GATE	17	51	COUNT302_GATE
COUNT301_OUT	18	52	COUNT302_OUT
COUNT301_UPDOWN	19	53	COUNT302_UPDOWN
EXT_TIMEBASE	20	54	D_GND
RESERVED	21	55	RESERVED
Bit-7	22	56	Bit-6
Bit-5	23	57	Bit-4
Bit-3	24	58	Bit-2
Bit-1	25	59	Bit-0
Bit-3	26	60	Bit-2
Bit-1	27	61	Bit-0
D_GND	28	62	D_GND
Bit-3	29	63	Bit-2
Bit-1	30	64	Bit-0
Bit-7	31	65	Bit-6
Bit-5	32	66	Bit-4
Bit-3	33	67	Bit-2
Bit-1	34	68	Bit-0

Figure A-3 Pins configuration for U2531A/U2541A/U2542A

Table A-1 Pins legend for U2531A/U2541A/U2542A

Pin	Signal Name	Direction	Reference	Description
1 to 4	AIH<101...104>	Input	AIL<101...104>	Differential positive input for AI channel <101...104>
5	EXTA_TRIG	Input	AI_GND	External AI analog trigger
6	AO202	Output	AO_GND	AO channel 2
7	AO201	Output	AO_GND	AO channel 1
8	AO_EXT_REF	Input	AO_GND	External reference for AO channels
9 to 12	RESERVED	Input	N/A	RESERVED
13, 14	RESERVED	Output	D_GND	RESERVED
15	COUNT<302>_CLK	Input	D_GND	Source of counter <302>
16	COUNG<301>_CLK	Input	D_GND	Source of counter <301>
17, 51	COUNT<301,302>_GATE	Input	D_GND	Gate of counter <301,302>
18, 52	COUNT<301,302>_OUT	Input	D_GND	Output of counter <301,302>
19, 53	COUNT<301,302>_UPDOWN	Input	D_GND	Up/Down of counter <301,302>
20	EXT_TIMEBASE	Input	D_GND	External TIMEBASE
21, 28, 49, 50, 54, 62	D_GND	N/A	N/A	Digital ground
22, 56, 23, 57, 24, 58, 25, 59	DIO502<7,0>	PIO	D_GND	Programmable DIO of Channel 502
26, 60, 27, 61	DIO504<3,0>	PIO	D_GND	Programmable DIO of Channel 504
29, 63, 30, 64	DIO503<3,0>	PIO	D_GND	Programmable DIO of Channel 503
31, 65, 32, 66, 33, 67, 34, 68	DIO501<7,0>	PIO	D_GND	Programmable DIO of Channel 501
35 to 38	AIL<101...104>	Input	N/A	Differential negative input for AI channel<101...104>
39	AI_GND	N/A	N/A	Analog ground for AI
40 to 42	AO_GND	N/A	N/A	Analog ground for AO
43 to 46	RESERVED	Input	N/A	RESERVED
47	EXTD_AO_TRIG	Input	D_GND	External AO waveform trigger
48	EXTD_AI_TRIG	Input	D_GND	External AI digital trigger
21, 55	RESERVED	Input	N/A	RESERVED

55-pin Connector (J1) Pins Configuration

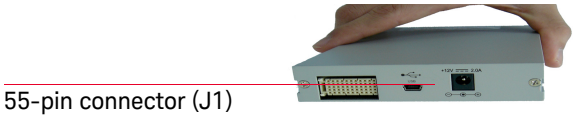

Figure A-4 Connector (J1) 55-pin

Table A-2 U2500A series J1 connector pin assignment

11	GND	+12 V	+12 V	GND	USB_D+	USB_D-	GND
10	GND	+12 V	+12 V	+12 V	GND	GND	GND
9	GND	+12 V	+12 V	+12 V	GND	USB_VBUS	GND
8	GND	LBL0	BRSV	GND	TRIG0	LBR0	GND
7	GND	LBL1	GA0	TRIG7	GND	LBR1	GND
6	GND	LBL2	GA1	GND	TRIG1	LBR2	GND
5	GND	LBL3	GA2	TRIG6	GND	LBR3	GND
4	GND	LBL4	STAR_TRIG	GND	TRIG2	LBR4	GND
3	GND	LBL5	GND	TRIG5	GND	LBR5	GND
2	GND	LBL6	CLK10M	GND	TRIG3	LBR6	GND
1	GND	LBL7	GND	TRIG4	GND	LBR7	GND
	Z	A	B	C	D	E	F

Table A-3 U2500A series J1 connector legend

Pin	Descriptions
+12 V	+12 V power from backplane
GND	Ground
BRSV	Reserved pin
TRIG0 to TRIG7	Trigger bus 0 to 7
STAR_TRIG	Star trigger
CLK10M	10 MHz reference clock
USB_VBUS	USB bused power, +5 V
USB_D+, USB_D-	USB differential pair
LBL <0..7> and LBR <0...7>	Reserved pin
GA0, GA1, GA2	Geographical address pin

This information is subject to change without notice. Always refer to the Keysight website for the latest revision.

© Keysight Technologies 2007 - 2017
Edition 9, July 1, 2017

Printed in Malaysia

U2541-90013
www.keysight.com