COMPREHENSIVE SERVICES

We offer competitive repair and calibration services, as well as easily accessible documentation and free downloadable resources.

SELL YOUR SURPLUS

We buy new, used, decommissioned, and surplus parts from every NI series. We work out the best solution to suit your individual needs.

- Sell For Cash
- Get Credit
- Receive a Trade-In Deal

OBSOLETE NI HARDWARE IN STOCK & READY TO SHIP

We stock **New, New Surplus, Refurbished,** and **Reconditioned** NI Hardware.

APEX WAVES

Bridging the gap *between the manufacturer and your legacy test system.*

1-800-915-6216

www.apexwaves.com

sales@apexwaves.com

All trademarks, brands, and brand names are the property of their respective owners.

Request a Quote CLICK HERE ***VXIpc-875B***

VXI

VXIpc™ 770/870B Series User Manual

June 2004 Edition
Part Number 370381B-01

Worldwide Technical Support and Product Information

ni.com

National Instruments Corporate Headquarters

11500 North Mopac Expressway Austin, Texas 78759-3504 USA Tel: 512 683 0100

Worldwide Offices

Australia 1800 300 800, Austria 43 0 662 45 79 90 0, Belgium 32 0 2 757 00 20, Brazil 55 11 3262 3599, Canada (Calgary) 403 274 9391, Canada (Ottawa) 613 233 5949, Canada (Québec) 450 510 3055, Canada (Toronto) 905 785 0085, Canada (Vancouver) 514 685 7530, China 86 21 6555 7838, Czech Republic 420 224 235 774, Denmark 45 45 76 26 00, Finland 385 0 9 725 725 11, France 33 0 1 48 14 24 24, Germany 49 0 89 741 31 30, Greece 30 2 10 42 96 427, India 91 80 51190000, Israel 972 0 3 6393737, Italy 39 02 413091, Japan 81 3 5472 2970, Korea 82 02 3451 3400, Malaysia 603 9131 0918, Mexico 001 800 010 0793, Netherlands 31 0 348 433 466, New Zealand 0800 553 322, Norway 47 0 66 90 76 60, Poland 48 22 3390150, Portugal 351 210 311 210, Russia 7 095 783 68 51, Singapore 65 6226 5886, Slovenia 386 3 425 4200, South Africa 27 0 11 805 8197, Spain 34 91 640 0085, Sweden 46 0 8 587 895 00, Switzerland 41 56 200 51 51, Taiwan 886 2 2528 7227, Thailand 662 992 7519, United Kingdom 44 0 1635 523545

For further support information, see the *Technical Support and Professional Services* appendix. To comment on the documentation, send email to techpubs@ni.com.

© 2002–2004 National Instruments Corporation. All rights reserved.

Important Information

Warranty

The VXIpc 770 and VXIpc 870B Series embedded VXI computers are warranted against defects in materials and workmanship for a period of one year from the date of shipment, as evidenced by receipts or other documentation. National Instruments will, at its option, repair or replace equipment that proves to be defective during the warranty period. This warranty includes parts and labor.

The media on which you receive National Instruments software are warranted not to fail to execute programming instructions, due to defects in materials and workmanship, for a period of 90 days from date of shipment, as evidenced by receipts or other documentation. National Instruments will, at its option, repair or replace software media that do not execute programming instructions if National Instruments receives notice of such defects during the warranty period. National Instruments does not warrant that the operation of the software shall be uninterrupted or error free.

A Return Material Authorization (RMA) number must be obtained from the factory and clearly marked on the outside of the package before any equipment will be accepted for warranty work. National Instruments will pay the shipping costs of returning to the owner parts which are covered by warranty.

National Instruments believes that the information in this document is accurate. The document has been carefully reviewed for technical accuracy. In the event that technical or typographical errors exist, National Instruments reserves the right to make changes to subsequent editions of this document without prior notice to holders of this edition. The reader should consult National Instruments if errors are suspected. In no event shall National Instruments be liable for any damages arising out of or related to this document or the information contained in it.

EXCEPT AS SPECIFIED HEREIN, NATIONAL INSTRUMENTS MAKES NO WARRANTIES, EXPRESS OR IMPLIED, AND SPECIFICALLY DISCLAIMS ANY WARRANTY OF MERCHANTABILITY OR FITNESS FOR A PARTICULAR PURPOSE. CUSTOMER'S RIGHT TO RECOVER DAMAGES CAUSED BY FAULT OR NEGLIGENCE ON THE PART OF NATIONAL INSTRUMENTS SHALL BE LIMITED TO THE AMOUNT THERETOFORE PAID BY THE CUSTOMER. NATIONAL INSTRUMENTS WILL NOT BE LIABLE FOR DAMAGES RESULTING FROM LOSS OF DATA, PROFITS, USE OF PRODUCTS, OR INCIDENTAL OR CONSEQUENTIAL DAMAGES, EVEN IF ADVISED OF THE POSSIBILITY THEREOF. This limitation of the liability of National Instruments will apply regardless of the form of action, whether in contract or tort, including negligence. Any action against National Instruments must be brought within one year after the cause of action accrues. National Instruments shall not be liable for any delay in performance due to causes beyond its reasonable control. The warranty provided herein does not cover damages, defects, malfunctions, or service failures caused by owner's failure to follow the National Instruments installation, operation, or maintenance instructions; owner's modification of the product; owner's abuse, misuse, or negligent acts; and power failure or surges, fire, flood, accident, actions of third parties, or other events outside reasonable control.

Copyright

Under the copyright laws, this publication may not be reproduced or transmitted in any form, electronic or mechanical, including photocopying, recording, storing in an information retrieval system, or translating, in whole or in part, without the prior written consent of National Instruments Corporation.

Trademarks

CVI™, LabVIEW™, Measurement Studio™, MITE™, MXI™, National Instruments™, NI™, ni.com™, NI-488™, NI-488.2™, NI-DAQ™, NI-VISA™, NI-VXI™ , and VXIpc™ are trademarks of National Instruments Corporation.

Product and company names mentioned herein are trademarks or trade names of their respective companies.

Patents

For patents covering National Instruments products, refer to the appropriate location: **Help»Patents** in your software, the `patents.txt` file on your CD, or `ni.com/patents`.

WARNING REGARDING USE OF NATIONAL INSTRUMENTS PRODUCTS

(1) NATIONAL INSTRUMENTS PRODUCTS ARE NOT DESIGNED WITH COMPONENTS AND TESTING FOR A LEVEL OF RELIABILITY SUITABLE FOR USE IN OR IN CONNECTION WITH SURGICAL IMPLANTS OR AS CRITICAL COMPONENTS IN ANY LIFE SUPPORT SYSTEMS WHOSE FAILURE TO PERFORM CAN REASONABLY BE EXPECTED TO CAUSE SIGNIFICANT INJURY TO A HUMAN.

(2) IN ANY APPLICATION, INCLUDING THE ABOVE, RELIABILITY OF OPERATION OF THE SOFTWARE PRODUCTS CAN BE IMPAIRED BY ADVERSE FACTORS, INCLUDING BUT NOT LIMITED TO FLUCTUATIONS IN ELECTRICAL POWER SUPPLY, COMPUTER HARDWARE MALFUNCTIONS, COMPUTER OPERATING SYSTEM SOFTWARE FITNESS, FITNESS OF COMPILERS AND DEVELOPMENT SOFTWARE USED TO DEVELOP AN APPLICATION, INSTALLATION ERRORS, SOFTWARE AND HARDWARE COMPATIBILITY PROBLEMS, MALFUNCTIONS OR FAILURES OF ELECTRONIC MONITORING OR CONTROL DEVICES, TRANSIENT FAILURES OF ELECTRONIC SYSTEMS (HARDWARE AND/OR SOFTWARE), UNANTICIPATED USES OR MISUSES, OR ERRORS ON THE PART OF THE USER OR APPLICATIONS DESIGNER (ADVERSE FACTORS SUCH AS THESE ARE HEREAFTER COLLECTIVELY TERMED "SYSTEM FAILURES"). ANY APPLICATION WHERE A SYSTEM FAILURE WOULD CREATE A RISK OF HARM TO PROPERTY OR PERSONS (INCLUDING THE RISK OF BODILY INJURY AND DEATH) SHOULD NOT BE RELIANT SOLELY UPON ONE FORM OF ELECTRONIC SYSTEM DUE TO THE RISK OF SYSTEM FAILURE. TO AVOID DAMAGE, INJURY, OR DEATH, THE USER OR APPLICATION DESIGNER MUST TAKE REASONABLY PRUDENT STEPS TO PROTECT AGAINST SYSTEM FAILURES, INCLUDING BUT NOT LIMITED TO BACK-UP OR SHUT DOWN MECHANISMS. BECAUSE EACH END-USER SYSTEM IS CUSTOMIZED AND DIFFERS FROM NATIONAL INSTRUMENTS' TESTING PLATFORMS AND BECAUSE A USER OR APPLICATION DESIGNER MAY USE NATIONAL INSTRUMENTS PRODUCTS IN COMBINATION WITH OTHER PRODUCTS IN A MANNER NOT EVALUATED OR CONTEMPLATED BY NATIONAL INSTRUMENTS, THE USER OR APPLICATION DESIGNER IS ULTIMATELY RESPONSIBLE FOR VERIFYING AND VALIDATING THE SUITABILITY OF NATIONAL INSTRUMENTS PRODUCTS WHENEVER NATIONAL INSTRUMENTS PRODUCTS ARE INCORPORATED IN A SYSTEM OR APPLICATION, INCLUDING, WITHOUT LIMITATION, THE APPROPRIATE DESIGN, PROCESS AND SAFETY LEVEL OF SUCH SYSTEM OR APPLICATION.

Compliance

Compliance with FCC/Canada Radio Frequency Interference Regulations

Determining FCC Class

The Federal Communications Commission (FCC) has rules to protect wireless communications from interference. The FCC places digital electronics into two classes. These classes are known as Class A (for use in industrial-commercial locations only) or Class B (for use in residential or commercial locations). All National Instruments (NI) products are FCC Class A products.

Depending on where it is operated, this Class A product could be subject to restrictions in the FCC rules. (In Canada, the Department of Communications (DOC), of Industry Canada, regulates wireless interference in much the same way.) Digital electronics emit weak signals during normal operation that can affect radio, television, or other wireless products.

All Class A products display a simple warning statement of one paragraph in length regarding interference and undesired operation. The FCC rules have restrictions regarding the locations where FCC Class A products can be operated.

Consult the FCC Web site at `www.fcc.gov` for more information.

FCC/DOC Warnings

This equipment generates and uses radio frequency energy and, if not installed and used in strict accordance with the instructions in this manual and the CE marking Declaration of Conformity*, may cause interference to radio and television reception. Classification requirements are the same for the Federal Communications Commission (FCC) and the Canadian Department of Communications (DOC).

Changes or modifications not expressly approved by NI could void the user's authority to operate the equipment under the FCC Rules.

Class A

Federal Communications Commission

This equipment has been tested and found to comply with the limits for a Class A digital device, pursuant to part 15 of the FCC Rules. These limits are designed to provide reasonable protection against harmful interference when the equipment is operated in a commercial environment. This equipment generates, uses, and can radiate radio frequency energy and, if not installed and used in accordance with the instruction manual, may cause harmful interference to radio communications. Operation of this equipment in a residential area is likely to cause harmful interference in which case the user is required to correct the interference at their own expense.

Canadian Department of Communications

This Class A digital apparatus meets all requirements of the Canadian Interference-Causing Equipment Regulations.

Cet appareil numérique de la classe A respecte toutes les exigences du Règlement sur le matériel brouilleur du Canada.

Compliance with EU Directives

Users in the European Union (EU) should refer to the Declaration of Conformity (DoC) for information* pertaining to the CE marking. Refer to the Declaration of Conformity (DoC) for this product for any additional regulatory compliance information. To obtain the DoC for this product, visit `ni.com/hardref.nsf`, search by model number or product line, and click the appropriate link in the Certification column.

* The CE marking Declaration of Conformity contains important supplementary information and instructions for the user or installer.

Contents

About This Manual

How to Use the Documentation Set ix
Conventions ix
Related Documentation x

Chapter 1
Introduction

VXIpc 770/870B Series Overview 1-1
Description 1-1
Modules 1-1
VXIpc 770/870B Series Functional Block Diagram 1-2
VXIpc 770/870B Series Functional Description 1-3
National Instruments Software 1-4

Chapter 2
Installation

Installing the VXIpc 770/870B Series 2-1
How to Remove the Controller from the VXI Chassis 2-3
Removing the VXIpc 770/870B Series Component Side Cover 2-4
Installing and Upgrading RAM 2-4
Installing a PCI Card (VXIpc-872B and VXIpc-875B Only) 2-5
Installing and Removing the Internal Hard Drive 2-5

Chapter 3
Configuration and Default Settings

Hardware Default Settings 3-1
System CMOS 3-3
SCSI Termination 3-4
Hard Drive Jumper 3-4
Slot 0 Detection/System Controller 3-5
MITE EEPROM 3-6
Power-On Self Configuration 3-6
User/Factory Configuration 3-6
How to Fix an Invalid EEPROM Configuration 3-7
CLK10 Source Routing and Termination 3-8

BIOS Configuration 3-9
Entering BIOS Setup 3-9
Main Setup Menu 3-10
DMI Event Logging Submenu 3-10
Advanced Setup Menu 3-11
Integrated Peripherals Submenu 3-12
Security Setup Menu 3-13
Boot Setup Menu 3-14
Exiting BIOS Setup 3-14
Software Configuration 3-15
Measurement and Automation Explorer (MAX) 3-15
Default MAX Settings 3-15
VXI-MXI-2 Default Settings 3-18
PCI-MXI-2 Default Settings 3-20
Front Panel SMB ExtClk Setup 3-21
Front Panel SMB TRGIN/TRGOUT 3-22
Watchdog Timer 3-22

Chapter 4
Developing Your Application

NI-VXI, NI-VISA, and Related Terms 4-1
Configuration 4-2
Device Interaction 4-3
Programming for VXI 4-5
Optimizing Large VXIbus Transfers 4-7
Shared Memory 4-8
NI-VXI API Notes 4-8
Compiler Symbols 4-8
Compatibility Layer Options 4-8
Debugging 4-9

Chapter 5
I/O Information

Front Panel Connectors 5-1
VGA 5-2
COM1 and COM2 5-4
Ethernet 5-5
Parallel Port 5-6
Universal Serial Bus 5-8
PS/2 5-9

SMB TRGIN/OUT and EXTCLK....5-11
GPIB (IEEE 488.2)....5-12
SCSI....5-13
Front Panel Features....5-15
Data Storage....5-16

Chapter 6
Common Questions and Troubleshooting

General Questions....6-1
Operating System, Drivers, and Software....6-1
Boot Options....6-4
Hard Drive Recovery....6-4
Installing an OS....6-5
Installing from a CD-ROM....6-5
Installing from a Network....6-6
Cables, Optional Hardware, and Main Power Fuse....6-6
Troubleshooting....6-8

Appendix A
Specifications

Appendix B
Modifying and Installing I/O Expansion Boards

Appendix C
Technical Support and Professional Services

Glossary

Index

About This Manual

This manual contains detailed instructions for installing and configuring your National Instruments VXIpc 770 or VXIpc 870B Series embedded computer kit.

How to Use the Documentation Set

Begin by reading *VXIpc 770/870B Series Installation and Troubleshooting*, a brief quick-start guide that describes how to install and get started with your controller.

This manual, the *VXIpc 770/870B Series User Manual*, contains more details about changing the installation or configuration from the defaults and using the hardware.

Conventions

The following conventions appear in this manual:

» The » symbol leads you through nested menu items and dialog box options to a final action. The sequence **File»Page Setup»Options** directs you to pull down the **File** menu, select the **Page Setup** item, and select **Options** from the last dialog box.

This icon denotes a note, which alerts you to important information.

This icon denotes a caution, which advises you of precautions to take to avoid injury, data loss, or a system crash.

bold Bold text denotes items that you must select or click in the software, such as menu items and dialog box options. Bold text also denotes parameter names.

italic Italic text denotes variables, emphasis, a cross reference, or an introduction to a key concept. This font also denotes text that is a placeholder for a word or value that you must supply.

`monospace`	Text in this font denotes text or characters that you should enter from the keyboard, sections of code, programming examples, and syntax examples. This font is also used for the proper names of disk drives, paths, directories, programs, subprograms, subroutines, device names, functions, operations, variables, filenames, and extensions.
`monospace bold`	Bold text in this font denotes the messages and responses that the computer automatically prints to the screen. This font also emphasizes lines of code that are different from the other examples.
VXIpc 770/870B series	The terms *VXIpc 770/870B Series* refers to the VXIpc-770, VXIpc-771, VXIpc-871B, VXIpc-872B, VXIpc-874B, and VXIpc-875B controllers, where the information applies to all controllers.

Related Documentation

The following documents contain information you may find helpful as you read this manual:

- ANSI/IEEE Standard 1014-1987, *IEEE Standard for a Versatile Backplane Bus: VMEbus*
- ANSI/IEEE Standard 1155-1998, *IEEE VMEbus Extensions for Instrumentation: VXIbus*
- ANSI/VITA 1-1994, *VME64*
- VXI-6, *VXIbus Mainframe Extender Specification*, Rev. 2.0, VXIbus Consortium
- *NI-VISA User Manual*
- *NI-VISA Programmer Reference Manual*

1

Introduction

VXIpc 770/870B Series Overview

Description

The VXIpc 770/870B Series embedded computers are high-performance C-size VXIbus system controllers. Both series controllers use off-the-shelf Intel PC technologies to bring you powerful VXI system control in a familiar PC environment. Using state-of-the-art packaging, the VXIpc 770 Series provides flexible single-slot control for your instrumentation needs, while the VXIpc 870B Series provides powerful control in a two-slot configuration.

Install either of these VXIpc controllers in your VXI mainframe, and you can take full advantage of the high-performance VXI backplane and have direct control of VXI registers, memory, interrupts, and triggers.

The VXIpc 770/870B Series computers are fully VXI*plug&play* compliant and compatible with PC-compatible software tools, the National Instruments LabVIEW and LabWindows™/CVI™ application software, and the NI-VISA, NI-VXI, and NI-488.2 bus interface software.

Modules

The VXIpc 770/870B Series controllers are available in six different configurations: the VXIpc-770, VXIpc-771, VXIpc-871B, VXIpc-872B, VXIpc-874B, and VXIpc-875B. All module configurations share a standard I/O set that includes integrated video, two PS/2 ports for keyboard and mouse, two USB ports, two RS-232 serial ports, one parallel port, 10/100 Ethernet, GPIB, three SMB connectors for trigger and clock I/O, and a system reset button. The controllers also include the Intel 815E chipset, which provides an interface for a 2.5 in. ATA100 hard drive and support for up to 512 MB RAM.

The VXIpc-770 features an Intel Celeron processor. The VXIpc-771 features an Intel Pentium III processor.

The VXIpc 870 Series controllers include an Intel Pentium III processor, a Wide Ultra2 SCSI port, two PC Card slots, and a computer speaker out jack. The VXIpc-871B and VXIpc-874B include an integrated CD-ROM drive; the VXIpc-872B and VXIpc-875B include a PCI expansion slot.

VXIpc 770/870B Series Functional Block Diagram

Figure 1-1 is a functional block diagram of the VXIpc 770/870B Series controllers.

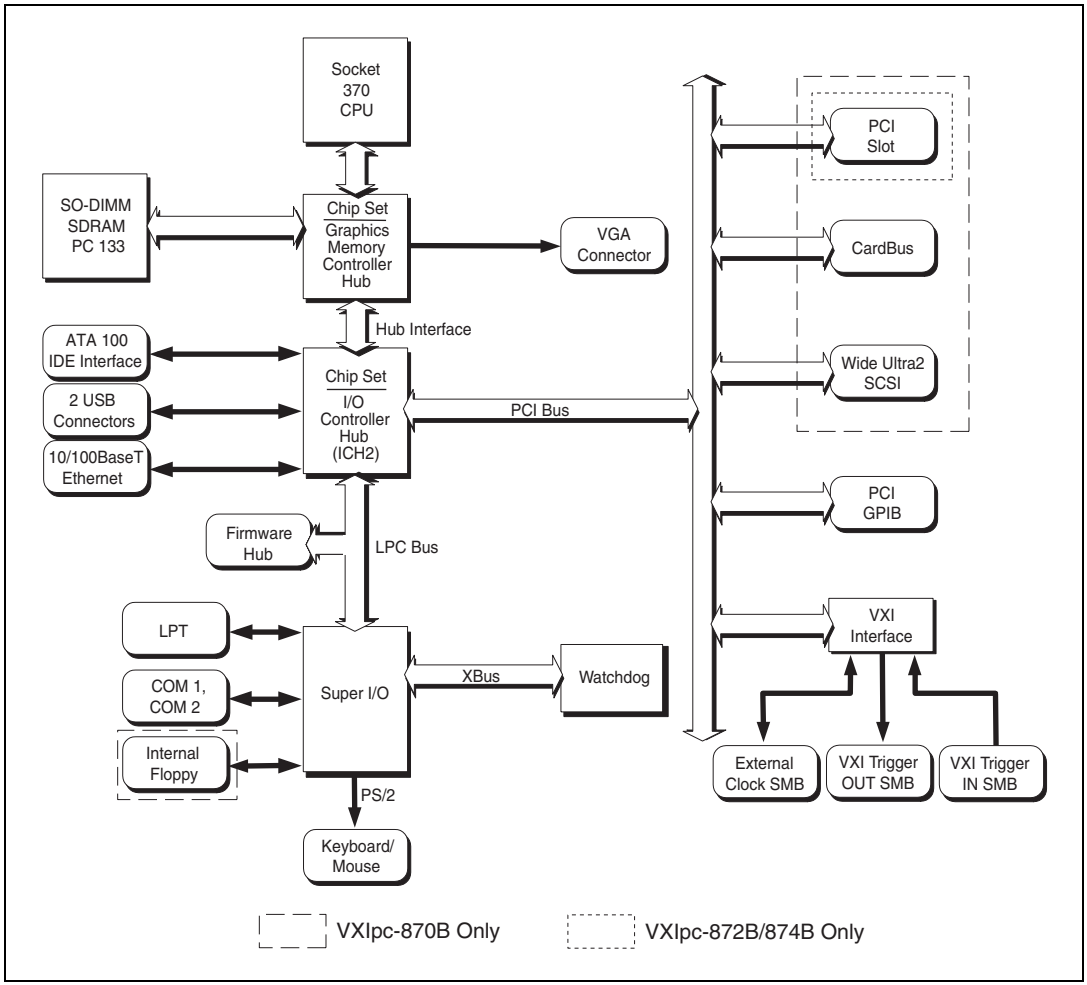

Figure 1-1. VXIpc 770/870B Series Block Diagram

VXIpc 770/870B Series Functional Description

This section contains brief functional descriptions of the major VXIpc 770/870B logic blocks shown in Figure 1-1.

- *Socket 370 CPU* is the socket definition for the Intel Pentium III and Celeron processors used in the VXIpc 770/870B Series controllers.
- The *Chipset GMCH* connects the CPU to the memory, I/O controller hub, and video.
- The *SO-DIMM* block consists of two 64-bit SDRAM sockets that can hold up to 512 MB.
- The *Chipset ICH2* connects to the GMCH, PCI bus, LPC bus, IDE interface, USB, and Ethernet.
- The *ATA100 IDE Interface* block is a dedicated PCI-IDE interface providing fast ATA100 transfers to an internal hard drive. The *IDE* interface is integrated in the chipset.

  For the VXIpc-871B and VXIpc-874B only, a CD-ROM drive is connected to the secondary IDE channel.
- *USB* is also integrated in the chipset and provides two connections to the Universal Serial Bus.
- The *10/100 Ethernet* autonegotiates its connection to either a 10 Mbit or 100 Mbit Ethernet connection.
- The *Firmware Hub* is a 4 Mbit Flash device for storing the system BIOS.
- The *Super I/O* block represents the other peripherals included with the VXIpc 770/870B Series controllers, including:
  - Two serial ports
  - One parallel port
  - Two PS/2 ports
  - A *Watchdog* timer

    You can program the *Watchdog* timer[1] to reset the controller or generate a trigger.
  - An internal 1.44 MB 3.5 in. floppy drive (VXIpc 870B Series only)
- The *PCI GPIB* block provides an interface to the NI-488.2 General Purpose Interface Bus.

[1] Currently, there is no software support for the Watchdog timer. If your application requires the watchdog timer, contact National Instruments for detailed instructions on how to program this device.

- The *VXI Interface* connects the VXIpc 770/870B Series controllers to the VXI backplane through the National Instruments MITE ASIC.
- The *External Clock SMB* provides an input for an external source to generate CLK10 to the VXI backplane or allow you to output CLK10 to an external device.
- The *VXI Trigger In/Out SMBs* provide a routable connection of the VXI triggers to and from the VXI backplane.

The following blocks apply to the VXIpc 870B Series only.

- The *Wide Ultra2 SCSI* provides a PCI-SCSI interface using the LSI53C895A SCSI controller.
- The *CardBus* block represents a PCI-CardBus interface using the TIPCI-1450 CardBus host bus adapter.
- The *PCI Slot* represents the PCI expansion slot available on the VXIpc-872B and VXIpc-875B.

National Instruments Software

National Instruments has developed several software kits you can use with the VXIpc 770/870B Series. NI-VISA and NI-VXI are already installed on your hard drive; LabVIEW is optional.

NI-VISA is the National Instruments implementation of the VISA specification. VISA is a uniform API for communicating and controlling Serial, GPIB, VXI, and VME instruments. This API aids in the creation of more portable applications and instrument drivers.

NI-VXI is the name of the National Instruments VXI bus control library. You can create applications using NI-VXI to control both VXI and VME devices. NI-VXI gives you complete VXI/VME functionality, including an API for performing basic VXI/VME data transfers and handling VXI/VME interrupts as well as VXI-specific functionality, such as doing message-based communication and handling VXIbus triggers.

The NI-VISA/NI-VXI software includes an interactive configuration and troubleshooting program, libraries of software routines for test and measurement (T&M) programming, interactive control programs for both NI-VISA and NI-VXI, a logging utility you can use for debugging your applications, and a VXI Resource Manager. You can use this software to seamlessly program multiple-mainframe configurations and have software compatibility across a variety of controller platforms.

You can also use the National Instruments LabVIEW application program and instrument drivers to ease your programming task. This standardized program matches the modular virtual instrument capability of VXI and can reduce your VXI software development time. This program features extensive libraries of GPIB, Serial, and VXI instrument drivers written to take full advantage of direct VXI control. LabVIEW includes all the tools needed for instrument control, data acquisition, analysis, and presentation.

LabVIEW is an easy-to-use, graphical programming environment you can use to acquire data from thousands of different instruments, including IEEE 488.2 devices, VXI devices, serial devices, PLCs, and plug-in data acquisition boards. After you have acquired raw data, you can convert it into meaningful results using the powerful data analysis routines in LabVIEW. LabVIEW also comes with hundreds of instrument drivers, which dramatically reduce software development time, because you do not need to spend time programming the low-level control of each instrument.

2

Installation

This chapter contains information about installing your VXIpc 770/870B Series controller and components.

Caution Electrostatic discharge can damage your controller. To avoid such damage, handle the controller only in a proper ESD-controlled environment.

Installing the VXIpc 770/870B Series

This section contains general installation instructions for the VXIpc 770/870B Series controller. Consult your VXIbus chassis user manual or technical reference manual for specific instructions and warnings.

1. Plug in your chassis before installing the controller. The power cord grounds the chassis and protects it from electrical damage while you are installing the controller.

Caution To protect both yourself and the chassis from electrical hazards, the chassis should remain off until you finish installing the controller.

2. Remove or open any doors or covers blocking access to the chassis slots.

Caution If the controller is not configured for automatic System Controller detection, be certain that the slot you select in your VXIbus chassis matches the controller configuration as either a System Controller device or a Non-System Controller device. Installing the controller into a slot that does not correspond with the jumper setting can damage the controller, the VXIbus backplane, or both. Refer to the *Slot 0 Detection/System Controller* section of Chapter 3, *Configuration and Default Settings*, for jumper configuration information.

3. Insert the controller in the desired slot by aligning the top and bottom of the controller with the card-edge guides inside the chassis. Slowly push the controller straight into the slot until its plug connectors are resting on the backplane receptacle connectors. Using slow, evenly distributed pressure, press the module straight in until it seats in the

expansion slot. The front panel of the controller should be even with the front panel of the chassis.

4. Tighten the retaining screws on the top and bottom edges of the front panel.
5. Check the installation.
6. Connect the keyboard and mouse to the appropriate PS/2 connectors.
7. Connect the VGA monitor video cable to the VGA connector.
8. Connect devices to ports as required by your system configuration.
9. Replace or close any doors or covers on the chassis.
10. Power on the chassis.
11. The controller should now boot. If the controller does not boot, refer to the *What if the VXIpc 770/870B Series does not boot?* section of Chapter 6, *Common Questions and Troubleshooting*.
12. On the first boot of the controller, a setup program automatically runs.
13. Follow the prompts in the setup program to fully configure your controller.
14. When prompted for the Windows serial number, enter the serial number of the operating system from the included certificate.
15. Your controller is now ready for development.

Figure 2-1 shows a VXIpc-872B installed in the system controller slot of a National Instruments VXI chassis. You can place VXI devices in any other slot.

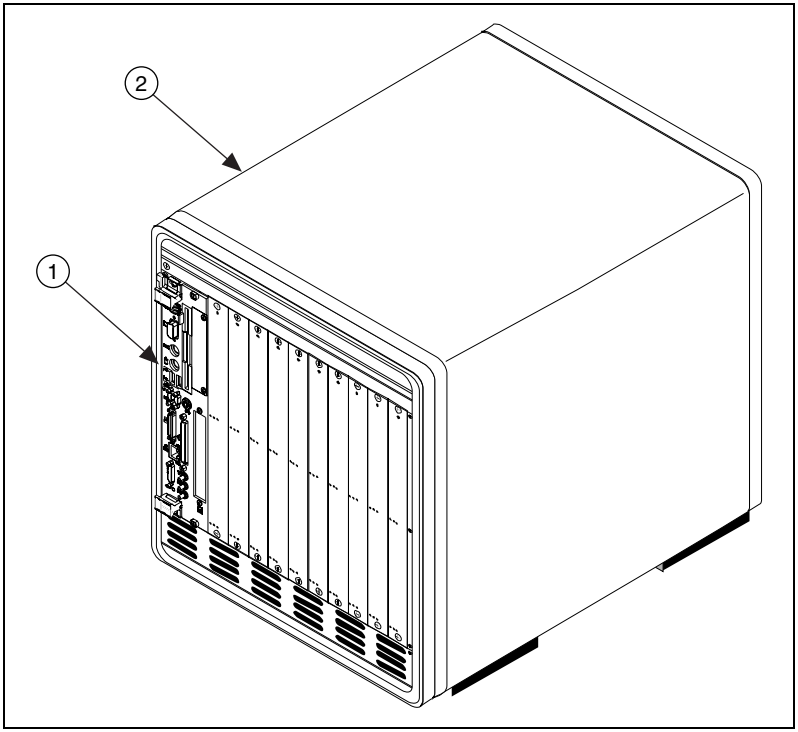

1	VXIpc-872B Controller	2	VXI Chassis

Figure 2-1. VXIpc-872B Controller Installed in a VXI Chassis

How to Remove the Controller from the VXI Chassis

The VXIpc 770/870B Series controllers are designed for easy handling. To remove the controller from the VXI chassis, complete the following steps:

1. Shut down all applications and the operating system.
2. Turn off power.
3. Disconnect devices from the front panel ports as your system configuration requires.
4. Remove the retaining screws in the controller front panel.
5. Push the upper ejector handle up and the lower ejector handle down until the controller pops out of the backplane connectors.
6. Slide the controller out of the chassis.

Removing the VXIpc 770/870B Series Component Side Cover

The VXIpc 770/870B Series is housed in a metal enclosure comprised of a top and bottom cover to improve EMC performance and provide easy handling. To access the jumper settings or install modules such as RAM or PCI cards, you must remove the component side cover.

Remove the top cover by removing the screws that attach it to the module.

Installing and Upgrading RAM

The VXIpc 770/870B Series uses 144-pin 133 MHz SDRAM and supports 64, 128, 256, and 512 MB SO-DIMMs, for a maximum of 512 MB. There are two RAM sockets in the VXIpc 770/870B Series, and you can change the amount of installed RAM by upgrading the SO-DIMMs.

National Instruments recommends the following size SO-DIMMs for use with the VXIpc 770/870B Series controller (SDRAM):

64 MB	4 MB × 64 SO-DIMMs—10 ns, 1.05 in. max.
128 MB	8 MB × 64 SO-DIMMs—10 ns, 1.05 in. max.
256 MB	16 MB × 64 SO-DIMMs—10 ns, 1.05 in. max.

Note National Instruments has tested and verified that the SO-DIMMs we sell work with the VXIpc 770/870B Series. We recommend you purchase your SO-DIMM modules from National Instruments. Other off-the-shelf SO-DIMM modules are not guaranteed to work properly.

To add or replace RAM for the VXIpc 770/870B Series, complete the following steps:

1. Remove the VXIpc 770/870B Series from the chassis. Refer to the removal instructions in the *How to Remove the Controller from the VXI Chassis* section.
2. Remove the component side cover. Refer to the removal instructions in the *Removing the VXIpc 770/870B Series Component Side Cover* section.
3. Add the SO-DIMM modules to the empty SO-DIMM sockets. Refer to Figure 2-2.

Note To ensure proper memory operation with a single-SO-DIMM configuration, always populate slot XA2. For a two-SO-DIMM configuration, populate slot XA2 with the higher capacity SO-DIMM.

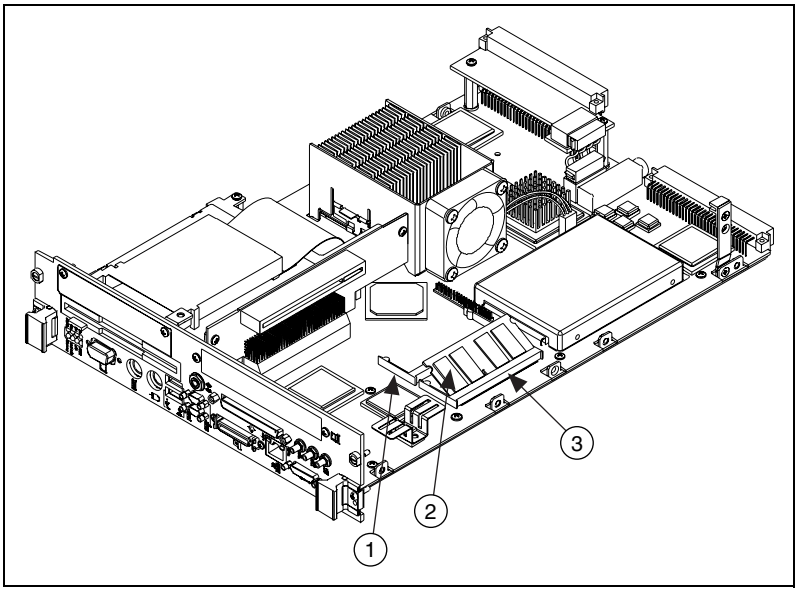

1	SO-DIMM Socket XA1	2	SO-DIMM Module	3	SO-DIMM Socket XA2

Figure 2-2. Installing a SO-DIMM in an VXIpc 770/870B Series Controller

Installing a PCI Card (VXIpc-872B and VXIpc-875B Only)

The VXIpc-872B and VXIpc-875B have a single PCI expansion slot. Refer to Appendix B, *Modifying and Installing I/O Expansion Boards*, for PCI board installation instructions.

Installing and Removing the Internal Hard Drive

Complete the following steps to remove the internal hard drive from your VXIpc 770/870B Series controller:

1. Remove the controller from the chassis. Refer to the removal instructions in the *How to Remove the Controller from the VXI Chassis* section.

2. Remove the component side cover. Refer to the removal instructions in the *Removing the VXIpc 770/870B Series Component Side Cover* section.
3. Remove the four screws under the solder side cover that hold the hard drive in place.

Caution Be careful when sliding the hard drive toward the rear of the controller. The hard drive could contact components on the motherboard, causing severe damage to both the components and motherboard.

4. Carefully and slowly slide the hard drive toward the rear of the controller to free the pins from the IDE connector.
5. When the pins are free of the connector, lift the hard drive off the motherboard.

Note Always handle the hard drive in accordance with the handling instructions outlined by the hard drive manufacturer.

Complete the following steps to install the internal hard drive in your VXIpc 770/870B Series controller:

1. Be sure the insulating pad is properly placed on the motherboard over the hard drive ground plane.

Caution Use care when installing the hard drive. The rear of the hard drive could contact components on the motherboard, causing severe damage to both the components and motherboard.

2. Set the hard drive on the motherboard and carefully slide the drive forward until it seats firmly in the IDE connector. The insulating pad should be between the hard drive and the motherboard.
3. Reinstall the four screws that hold the hard drive in place.
4. Reinstall the component side cover.

The controller is now ready to be reinstalled in the VXI mainframe.

3

Configuration and Default Settings

Hardware Default Settings

This chapter summarizes the hardware default settings for the VXIpc 770/870B Series for easy reference. The module is set at the factory for the most commonly used configuration.

Figure 3-1 shows the location of the user-configurable jumpers and switches on the VXIpc 770/870B Series. The diagram also shows the location of the serial number and assembly numbers.

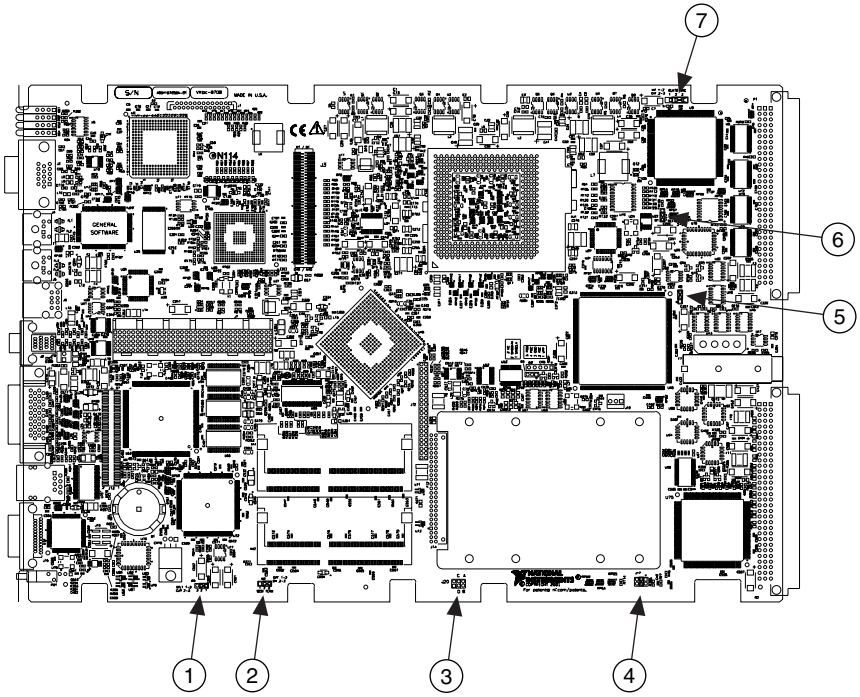

1	CMOS (W5)	4	Automatic Slot Detection (J17)	6	MITE User Configuration (W1)
2	SCSI Termination Enable (W6)	5	MITE Configuration Enable (W2)	7	CLK10 Source Switch (S1)
3	Hard Drive Master/Slave (J20)				

Figure 3-1. VXIpc 770/870B Series Parts Locator Diagram

Table 3-1 lists the factory-default settings and options for the onboard jumpers and switches.

Table 3-1. VXIpc 770/870B Series Hardware Default Settings

Jumper	Default Setting	Optional Setting
W5	1-2 Normal CMOS operation	2-3 Clear CMOS
W6	2-3 16-bit SCSI termination enabled	1-2 SCSI termination disabled

Table 3-1. VXIpc 770/870B Series Hardware Default Settings (Continued)

Jumper	Default Setting	Optional Setting
J20	No jumper	Master/Slave/CSEL*
J17	3-4 Automatic slot zero detection	1-2 Non-slot zero 5-6 Force slot zero
W2	2-3 Enable MITE self configuration	1-2 Disable MITE self configuration
W1	2-3 MITE user configuration	1-2 MITE factory configuration
S1	1-2 Internal oscillator	2-3 External oscillator
* These pins are generally defined in a figure on the hard drive cover.		

Note Do *not* adjust any jumpers or switches not listed in Table 3-1 or that are not documented in this manual unless directed by National Instruments. Other configuration jumpers are shown in the event National Instruments technical support needs to make adjustments to your settings.

System CMOS

The VXIpc 770/870B Series contains a battery backed-up memory used to store BIOS configuration information. The battery is a hermetically sealed lithium battery. Contact National Instruments technical support at `ni.com/support` for more information about the battery.

To clear the CMOS contents, complete the following steps:

1. Follow the instructions in the *How to Remove the Controller from the VXI Chassis* section of Chapter 2, *Installation*, to remove the controller from the VXI chassis.
2. Follow the instructions in the *Removing the VXIpc 770/870B Series Component Side Cover* section of Chapter 2, *Installation*, to remove the controller's component side cover.
3. Move the jumper on W5 from pins 1–2 to pins 2–3 as shown in Figure 3-2.

Caution Do *not* leave the jumper on pins 2–3. Doing so decreases battery life.

4. Wait 1 second. Move the jumper back to pins 1–2.
5. Reinstall the controller in the chassis.

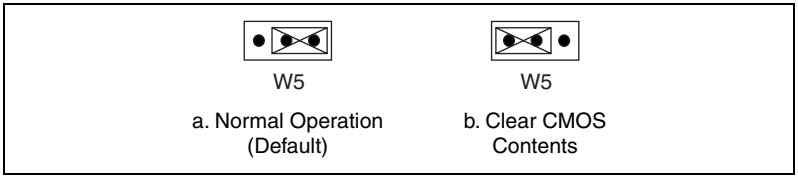

Figure 3-2. System CMOS

SCSI Termination

The VXIpc 870B Series uses active termination on the Wide Ultra2 SCSI bus. Because the VXIpc 870B Series is normally an end device, you should not need to disable the termination; however, for informational purposes Figure 3-3 shows the jumper settings for both enabled and disabled termination.

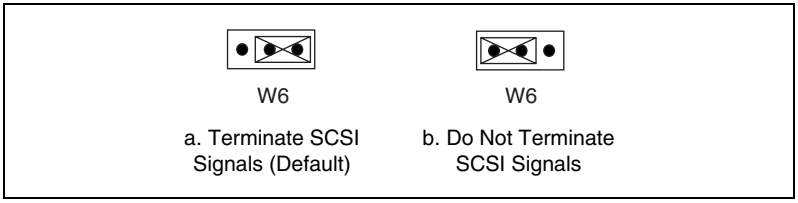

Figure 3-3. SCSI Termination

Hard Drive Jumper

J20 provides easy access to the 2.5 in. IDE hard drive configuration pins. Because most hard drives are device 0 by default, there should be no need to install any jumpers on J20. However, some third-party drives require a jumper to set the drive as device 0; therefore, you have access to the pins. The jumper settings can be specific to the hard drive, and a diagram showing the proper configurations is normally included with or on the hard drive.

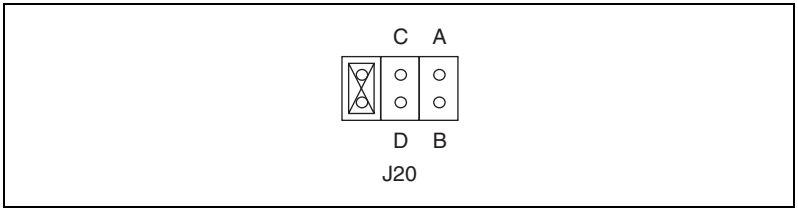

Figure 3-4. Primary IDE Channel Configuration Jumper

Slot 0 Detection/System Controller

The VXIpc 770/870B Series is configured at the factory to automatically detect if it is installed in Slot 0 of a VXIbus mainframe. With automatic System Controller slot detection, you can install the module into any VXIbus slot.

You can manually configure the VXIpc 770/870B Series for either System Controller or Non-System Controller operation by defeating the automatic-detection circuitry. Use the three-position jumper J17 to select automatic detection, System Controller, or Non-System Controller operation. Figure 3-5 shows these three settings.

Caution Do *not* install a device configured for System Controller into another slot without first reconfiguring it to either Non-System Controller or automatic-detection configuration. Neglecting to do this could result in damage to the device, the VXIbus backplane, or both.

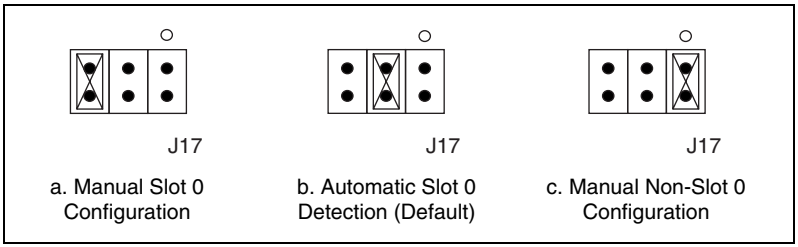

Figure 3-5. System Controller Slot Configuration

When the VXIpc 770/870B Series is installed in Slot 0 of a VXI system, it becomes the VXIbus System Controller. In this role, it has VXIbus Data Transfer Bus Arbiter circuitry that accepts bus requests on all four VXIbus request levels, prioritizes the requests, and grants the bus to the highest priority requester. As VXIbus System Controller, the VXIpc 770/870B Series also drives the 16 MHz VXIbus system clock by an onboard 16 MHz oscillator.

As required by the VXIbus specification, the VXIpc 770/870B Series drives the 10 MHz signal CLK10 on a differential ECL output when installed in Slot 0. When not installed in Slot 0, the VXIpc 770/870B Series only receives the CLK10 signal.

MITE EEPROM

Power-On Self Configuration

The VXIpc 770/870B Series has an onboard EEPROM, which stores default register values for the VXI circuitry. These values are loaded when you power up the computer. The values read from the EEPROM program the PCI interface and the VXIbus registers so that the VXI interface is ready to respond to Resource Manager accesses within the required 5 s of SYSRST# deasserting.

You can disable this power-on self-configuration (POSC) circuit by changing switch W2. Although this makes the VXI circuitry unusable, it is sometimes helpful in debugging address and interrupt conflicts with add-in boards. In general, however, you should leave switch S2 in its factory-default setting. Figure 3-6 shows the possible configurations for W2.

a. VXI Circuitry Loads Power-on Defaults from EEPROM (Default)

b. Power-on Self Configuration Circuit is Disabled

Figure 3-6. Power-on Self Configuration Status

User/Factory Configuration

The EEPROM is divided into two halves—one half is factory configured and one half is user configurable. Use jumper W1 to control the operation of the EEPROM. The setting of this jumper determines whether the VXIpc 770/870B Series boots off the factory-configured half or the user-modified settings. In its default setting, the VXIpc 770/870B Series boots off the user-configurable half.

This jumper is useful in the event that the user-configured half of the EEPROM becomes corrupted in such a way that the VXIpc 770/870B Series boots to an unusable state. By altering this jumper setting, you can return to the factory configuration and get up and running again. Use the procedure as described in the *How to Fix an Invalid EEPROM Configuration* section.

Figure 3-7 shows the configuration settings for EEPROM operation.

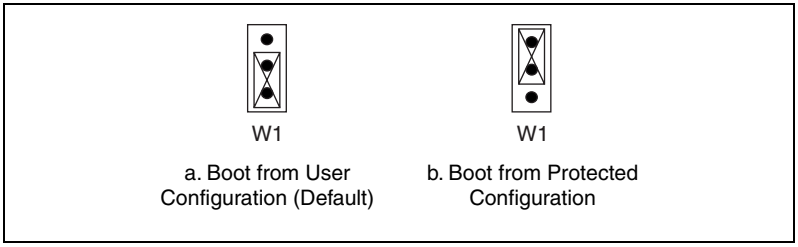

Figure 3-7. EEPROM Configuration

How to Fix an Invalid EEPROM Configuration

Use MAX under Windows to edit the VXIpc 770/870B Series configuration. Some of these settings are stored in files that the NI-VXI software reads, while other settings are stored directly in the VXIpc 770/870B Series EEPROM.

Certain EEPROM configurations, including invalid configurations, can lock up your computer while it is booting. Generally, only the size and location of the memory windows can cause your VXIpc 770/870B Series to lock up your system. For example, many PCI-based computers will not boot if a board in its system requests more memory space than the computer can allocate. If you encounter this situation, you should reduce the size of the VXIpc 770/870B Series user window. The EEPROM can become corrupted if the VXIpc 770/870B Series is shut down while it is updating the EEPROM.

If one of these situations occurs after you change the configuration, complete the following steps to reconfigure the VXIpc 770/870B Series:

1. Power off your computer.

Caution To protect both yourself and the mainframe from electrical hazards, the mainframe should remain off until you finish changing the settings on the VXIpc 770/870B Series.

2. Change jumper W1 to the position shown in Figure 3-7b to restore the factory configuration.
3. Power on the computer. The computer should boot this time because the factory-default configuration is being used to initialize the VXIpc 770/870B Series.

4. Run your software configuration utility to re-adjust the VXIpc 770/870B Series configuration.
5. After saving the configuration, exit Windows and power off the computer.
6. Change jumper W1 to the default position, as shown in Figure 3-7a.
7. Power on the computer. If the computer does not boot with this configuration, you will need to repeat these steps, modifying your configuration until a final configuration is reached.

CLK10 Source Routing and Termination

When the VXIpc 770/870B Series is installed in Slot 0 of your mainframe, it supplies the VXIbus CLK10 signal. The VXIpc 770/870B Series can use two different sources to generate this signal—an onboard oscillator or an external oscillator connected through the CLK SMB connector. You can select the internal or external clock source by setting switch S1 as shown in Table 3-1. The VXIpc 770/870B Series can also be configured to drive the external CLK10 SMB with the VXIbus CLK10 signal. Use the hardware configuration in MAX to route the CLK10 signal to the SMB connector.

A 50 Ω termination option is available in MAX to terminate an external CLK10 source. The 50 Ω termination option has no effect when the internal oscillator is selected as the CLK10 source.

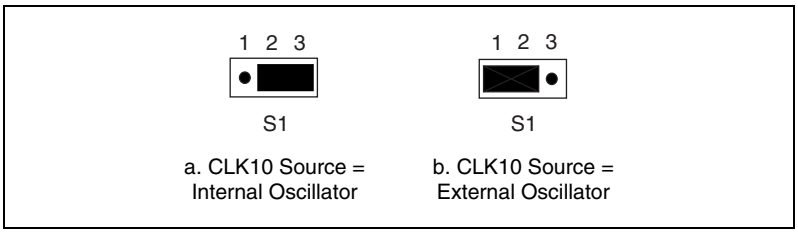

Figure 3-8. CLK10 Source

Note Table 3-1 and Figure 3-8 are in agreement. Figure 3-8a shows the switch position for shorting pins 1 and 2. Figure 3-8b shows the switch position for shorting pins 2 and 3.

BIOS Configuration

You can change the VXIpc 770/870B Series configuration settings in the BIOS setup. The BIOS is the low-level interface between the hardware and PC software that configures and tests your hardware when you boot the system. The BIOS setup program includes menus for configuring settings and enabling controller features.

Most users do not need to use the BIOS setup program, as the VXIpc 770/870B Series controller ships with default settings that work well for most configurations.

Caution Changing BIOS settings may lead to incorrect controller behavior and possibly an unbootable controller. If this happens, follow the instructions for restoring default settings in the *System CMOS* section. In general, do *not* change a setting unless you are absolutely certain what it does.

Entering BIOS Setup

To start the BIOS setup utility, complete the following steps:

1. Power on or reboot your VXIpc 770/870B Series controller.
2. When the message **`Press <DEL> to enter SETUP`** appears, press <Delete> or <Del> on the numeric keypad. The message **`Entering Setup`** appears, and the setup program is loaded after a short delay.
3. When you first enter the BIOS setup program, it displays the **Main** menu.

Use the following keys to navigate through the BIOS setup:

- **Left Arrow**, **Right Arrow**—Use these keys to move between the different setup menus. If you are in a submenu, these keys have no effect, and you need to press <Esc> to leave the submenu first. (To use the arrows on the numeric keypad, you must turn off Num Lock.)
- **Up Arrow**, **Down Arrow**—Use these keys to move between the options within a setup menu. (To use the arrows on the numeric keypad, you must turn off Num Lock.)
- **<Enter>**—Use this key to either enter a submenu or display all available settings for a highlighted configuration option.
- **<Esc>**—Use this key to return the parent menu of a submenu. At the top-level menus, this key serves as a shortcut to the **Exit** menu.
- **<+>** and **<–>**—Use these keys to cycle between all available settings for a selected configuration option.

Main Setup Menu

The most commonly accessed and modified BIOS settings are in the **Main** setup menu. The **Main** setup menu includes the following settings:

- **System Time & Date**—This setting controls the time of day, which is stored in a battery-backed real-time clock. Most operating systems also include a way to change this setting. Use <+> and <–> in conjunction with <Enter> to change these values.
- **DMI Event Logging**—This setting brings up the **DMI Event Logging** submenu (refer to the *DMI Event Logging Submenu* section).
- **Keyboard Required to Boot**—When **Yes**, a missing or malfunctioning keyboard causes the BIOS to halt with an error. When **No**, the BIOS allows booting without a keyboard, and you can attach a keyboard at any time during the powered up state. To use this controller in a "headless" mode, you must set this option to **No**. The default value is **Yes**.
- **Num Lock**—This setting indicates whether you turn on Num Lock at boot time. The default value is **On**.
- **Primary/Secondary Master/Slave**—These items display the IDE/ATA devices detected in the system. Normally, you do not need to modify these items. However, if an IDE/ATA device is not autodetected properly, you can specify it manually by pressing <Enter> on an item.
- **System Information**—This setting displays a screen containing important system information about the controller.

DMI Event Logging Submenu

Major errors that occur during the BIOS booting process are stored in battery-backed memory on the controller and remain there until you view and clear them using this submenu. This logging capability allows a system administrator to detect the historical occurrence of faults on a controller. This submenu includes the following items:

- **View DMI Event Log**—This setting displays a window containing all logged system errors and the time at which they occurred.
- **Mark Events as Read**—This setting prevents any current logged entries from being displayed again. However, all entries remain in battery-backed memory, and you can retrieve them using other DMI software that is beyond the scope of this document.

- **Clear All Events**—When set to **Yes**, this setting clears all entries from the DMI event log on reboot.
- **Event Logging**—This setting controls whether events are logged. Disabling logging has no impact on system performance. The default is **Enabled**.

Advanced Setup Menu

This menu contains BIOS settings that normally do not require modification. If you have specific problems such as unbootable disks or resource conflicts, you may need to examine these settings.

Caution Changing settings in this menu may result in an unstable or unbootable controller. If this happens, follow the procedures outlined in the *System CMOS* section to restore BIOS settings to their factory defaults.

The **Advanced** setup menu includes the following settings:

- **Reset Configuration Data**—A portion of the EEPROM on the controller is designated as the Extended System Configuration Data region (ESCD). The BIOS and Plug-and-Play operating systems use this table to store the *Last Known Good* configuration of system peripherals. If you experience resource conflicts or peripheral malfunction, set this setting to **Yes** to force the BIOS to recreate the ESCD on the next reboot. This is rarely necessary.
- **Integrated Peripherals**—Use this setting to bring up the **Integrated Peripherals** submenu (refer to the *Integrated Peripherals Submenu* section).
- **Local Bus IDE Adapter**—The VXIpc 770/870B Series controller has two integrated IDE/ATA channels (Primary and Secondary), each capable of supporting two ATA devices (Master and Slave). Use this setting to disable one or more of these integrated channels. You should modify this setting only if specified in other sections of this manual. The default is **Both**.
- **Write Protect Boot Sector**—When set to **Yes**, this setting prevents modification of a hard disk boot sector through INT 13h services, which may help prevent certain computer viruses from infecting the controller. This setting does not prevent boot sector modification by 32-bit operating system drivers that access the hard disk directly. The default is **No**.
- **Quick Boot Mode**—When you enable this option, certain lengthy BIOS tests that rarely fail are skipped to shorten controller boot time. The default is **Enabled**.

- **Summary Screen**—This setting controls the display of the summary screen shown after BIOS completes its initialization, but before booting takes place. You can disable this screen in the interest of shortening controller boot time. The default is **Disabled**.
- **PXE Network Boot**—Setting this option to **Enabled** executes an option ROM that allows booting a controller from the integrated network connection through the PXE (Preboot eXecution Environment) protocol. After setting this option, you may need to reboot, re-enter BIOS Setup, and rearrange the items under the **Boot** menu for network booting to take precedence over floppy drives and hard drives. The default is **Disabled**.
- **SCSI Option ROM** (VXIpc 870B only)—To boot from an SCSI device attached to the integrated SCSI bus, set this option to **Enabled**. This results in the BIOS running the SCSI Option ROM. Unnecessarily enabling this option results in increased boot time. You do not need to enable this option unless you want to boot from an SCSI device. The default is **Disabled**.

Note Because of limited available memory for Option ROM mapping, you must enable either PXE Network Boot or the SCSI Option ROM. Enabling both results in an **Expansion ROM** error on the next boot.

Integrated Peripherals Submenu

Use this submenu to apply nondefault configurations to the front panel peripherals of an VXIpc 770/870B Series controller. Normally, you do not need to modify these settings, as the factory default settings provide the most compatible and optimal configuration possible.

- **Serial Port A & B**—This setting enables or disables COM1 and COM2, respectively. You can also change this setting to **Enabled** and modify the base address and Interrupt Request Level (IRQ) of a port. The default is **Auto**, which places COM1 at 0x3F8 IRQ 4 and COM2 at 0x2F8 IRQ 3.
- **Parallel Port**—Use this setting to enable or disable LPT1. You can also change this setting to **Enabled** and modify the base address, IRQ level, and ISA Direct Memory Access (DMA) channel of the port. The default is **Auto**, which places LPT1 at 0x378, IRQ 7, using ISA DMA Channel 3 if necessary.
- **Parallel Port Mode**—The PC industry has created several different modes of operation for this port over the years. Usually, the default setting works for all applications. However, if a parallel port device

specifically requires a nondefault setting, you can change it here. The default is **Bidirectional**, for full IEEE 1284 capabilities.

- **Floppy Drive**—You can route the internal signals used for the 3.5 in. floppy drive operation through the pins on the parallel port connector. Use this setting to operate the VXIpc 770/870B Series controller with a specialized external floppy drive. Normally, using a Universal Serial Bus (USB) floppy drive is preferable to this option, which requires a specially designed drive and cable. (Refer to the *Parallel Port* section in Chapter 5, *I/O Information*, for pinout information.) Setting this option to **Parallel Port** disables normal LPT1 functionality. For the VXIpc 870B Series, the Default is **Enabled**, which routes the signals to the standard internal floppy drive. For the VXIpc-770, the default is **Disabled**.
- **Legacy USB Support**—Use this setting to use a USB keyboard and mouse as if they were standard PS/2-style peripherals. You *must* enable this setting when using a USB keyboard and/or mouse in operating systems with no USB support. You may want to disable this in certain real-time environments. The default is **Enabled**.

Security Setup Menu

Use this menu to apply system-level passwords to the VXIpc 770/870B Series controller. With these passwords, you can restrict access to the BIOS setup program, floppy drives, and operating systems installed on bootable devices. If you forget any password, you can restore the CMOS contents to the factory default as described in the *System CMOS* section of this manual.

Note In most chassis configurations, an unauthorized user has easy access to the jumper that resets the CMOS contents to the factory default. For a secure setup of this controller, National Instruments recommends further provisions that are beyond the scope of this document.

The Security setup menu includes the following settings:

- **Set Supervisor Password**—This setting sets the password that governs supervisor-level access to the BIOS setup screen and booting. The default is **no password**.
- **Set User Password**—This setting sets the password that governs user-level access to the BIOS setup screen and booting. If you enter BIOS setup using the user password, the only BIOS setting you can modify is the user password. The default is **no password**.

- **Password on Boot**—This setting controls whether the controller requires a supervisor or user password to boot an operating system. If you enter the supervisor password on boot, you have supervisor-level diskette access. If you enter the user password on boot, you have user-level diskette access.
- **Diskette Access**—This setting controls which level of access is required to access the floppy drive through INT 13h services. This setting has no effect on 32-bit operating systems drivers that access the floppy disk directly. The default is **Supervisor**.

Note To disable a current password, leave the new password field blank by simply pressing <Enter> on the field.

Boot Setup Menu

This screen displays the boot order of devices associated with the controller. The BIOS proceeds down this list in search of a bootable device. If the BIOS fails to find any bootable device, the message **Operating System Not Found** is displayed, and the system halts.

- **Removable Devices**—The boot list includes all classes of floppy and ZIP drives, both internal and USB-based devices.
- **Hard Drive**—The boot list includes all IDE/ATA and SCSI hard disks detected on the system. Press <Enter> on this entry to expand it to select the boot priority of individual hard drives.
- **CD-ROM Drive**—The boot list includes all classes of CD-ROM drive, including USB drives and integrated IDE/ATA drives.
- **Network Boot**—If the PXE Network Boot option is enabled (refer to the *Advanced Setup Menu* section), there will be another option listed on the Boot Menu that represents booting from the network. The option is listed as Intel Boot Agent (IBA) and includes a version number.

Exiting BIOS Setup

The **Exit** setup menu includes all available options for exiting, saving, and loading the BIOS default configuration. As an alternative to this screen, use <F9> to load BIOS default settings and <F10> to save changes and exit setup.

The **Exit** setup menu includes the following settings:

- **Exit Saving Changes**—Any changes made to BIOS settings are stored in the battery-backed System CMOS. The setup program then exits and reboots the controller.
- **Exit Discarding Changes**—Any changes made to BIOS settings during this session of the BIOS setup program are discarded. The setup program then exits and boots the controller without rebooting first.
- **Load Setup Defaults**—This setting restores all BIOS settings to the factory default. This is useful if the controller exhibits unpredictable behavior due to an incorrect or inappropriate BIOS setting. Notice that any nondefault settings such as boot order, passwords, and keyboardless operation are restored to their factory defaults. This may produce undesirable behavior, and in heavily customized cases, may cause the controller to malfunction or fail to boot.
- **Discard Changes**—Any changes made to BIOS settings during this session of the BIOS setup program are discarded. Unlike **Exit Discarding Changes**, however, the BIOS setup continues to be active.
- **Save Changes**—Changes made to BIOS settings during this session are committed to battery-backed System CMOS. The setup program remains active, allowing further changes.

Software Configuration

Measurement and Automation Explorer (MAX)

Measurement and Automation Explorer (MAX) is the utility for configuring most National Instruments hardware and software. You can use this utility to configure your VXIpc 770/870B Series controller's various software and hardware features.

The following sections describe hardware configuration settings available with NI-VXI 3.2.1. If you are using a later version of NI-VXI, you may find some differences between your settings and those described in this section.

Default MAX Settings

The **General** tab for the VXIpc MAX hardware configuration contains two options for quickly configuring your VXIpc controller. You can use the **Quick Configuration** table to select from a few commonly used configurations. The default setting lists **Current Board Configuration**, which means the current hardware configuration is set according to the last user modifications made. Table 3-2 lists the configurations you can select.

Table 3-2. VXIpc MAX General Tab Settings

Menu Selection	Explanation
Current Board Configuration	(Default) Last configuration loaded
LA 5 Message Based	Sets controller to message-based device at logical address 5
LA 5 Register Based, Shared RAM	Sets controller to register-based device at logical address 5, sharing RAM
Share 128 KB of Memory	Shares 128 KB of RAM

Note Whenever you open the hardware configuration, MAX reports that the VXIpc is in **Current Board Configuration**. This means that if you select one of the common configurations such as **LA 5 Message Based** and save the configuration, the next time you open MAX, it will not report that the **Current Board Configuration** is **LA 5 Message Based** as you might expect. If you have used a common configuration setting, closed and reopened MAX, and want to verify the current VXIpc configuration, you must check each tab for the current controller configuration.

In MAX, you can load a VXIpc configuration from a file or save the current configuration for future use. You may execute this option by selecting one of the options in the **General** tab in the MAX hardware configuration.

You can use the **Device** tab to set some basic VXI properties of your device. Table 3-3 lists the default settings for this tab on your VXIpc controller.

Table 3-3. VXIpc MAX Device Tab Default Settings

Setting	Default Value
Logical Address	0
Device Class	Message Based
Interrupt Configuration: Number of Handlers	1

You can use the **Shared Memory** tab to configure the amount of memory you make available to the VXI bus. Table 3-4 lists the default settings for this tab on your VXIpc controller. The default setting on the controller is to share no system RAM. After you select one of the shared RAM options, you can select the amount of RAM you want to share.

Table 3-4. VXIpc MAX Shared Memory Tab Default Settings

Setting	Default Value
Shared Memory	Do Not Share Memory

You can use the **VXI bus** tab to set various configurations related to VXI bus control. Table 3-5 lists the default settings for this tab on your VXIpc controller.

Table 3-5. VXIpc MAX VXI Bus Tab Default Settings

Setting	Default Value
Bus Settings: Bus Timeout	500 µs
Bus Requester: Release on Request	Checked
Bus Requester: Request Level	3
Bus Requester: Operate as Fair Requester	Checked
Bus Arbitration: Prioritized	Checked

You can use the **PCI tab** to set various configurations associated with the PCI resources your VXI interface uses. Table 3-6 lists the default settings for this tab on your VXIpc controller.

Table 3-6. VXIpc MAX PCI Tab Default Settings

Setting	Default Value
User Window: Enable Low-Level Register Access API Support	Checked
User Window Size	128 MB
DMA Setting: Enable DMA on this Controller	Enabled

You can use the SMB tab to configure the options associated with the SMB connectors on the front panel of your VXIpc controller. Table 3-7 lists the default settings for this tab on your VXIpc controller.

Table 3-7. VXIpc MAX SMB Tab Default Settings

Setting	Default Value
Clock 10 Settings: Enable 50 Ohm Termination	Checked

VXI-MXI-2 Default Settings

This section summarizes the software default settings for the VXI-MXI-2. This information is included for your convenience in case you have any of these modules in your system.

Table 3-8. VXI-MXI-2 General Tab Default Settings

Setting	Default Value
Common Board Configurations	Current Board Configuration

Table 3-9. VXI-MXI-2 Device Tab Default Settings

Setting	Default Value
Logical Address Selection	Use DIP Switch to Set the Logical Address
Shared Memory: Address Space	A24
Shared Memory: Requested Memory	16 KB
Operate in Interlocked Mode	Checked

Table 3-10. VXI-MXI-2 MXI-2 Bus Tab Default Settings

Setting	Default Value
Bus Settings: Bus Timeout	1 ms
System Controller	Auto Detect

Table 3-10. VXI-MXI-2 MXI-2 Bus Tab Default Settings (Continued)

Setting	Default Value
Advanced: Bus Protocols: MXI Transfer Limit	Unlimited
Advanced: Bus Protocols: Perform Parity Checking	Checked
Advanced: MXI-2 CLK 10 Signal	Receive

Table 3-11. VXI-MXI-2 VXI Bus Tab Default Settings

Setting	Default Value
Bus Settings: Bus Timeout	125 µs
Bus Requester: Release on Request	Checked
Slot 0 Configuration: Auto-Detect (Recommended)	Checked
Advanced: Bus Protocols: Transfer Limit	256
Advanced: Bus Arbitration: Arbiter Type: Priority	Checked
Advanced: Bus Arbitration: Operate as Fair Requester	Checked
Advanced: Bus Arbitration: Enable Arbiter Timeout	Checked
Advanced: Bus Arbitration: Request Level	3

PCI-MXI-2 Default Settings

This section summarizes the software default settings for the PCI-MXI-2. This information is included for your convenience in case you have any of these modules in your system.

Table 3-12. PCI-MXI-2 General Tab Default Settings

Setting	Default Value
Common Board Configurations	Current Board Configuration

Table 3-13. PCI-MXI-2 Device Tab Default Settings

Setting	Default Value
Logical Address	0
Device Class	Message Based
Interrupt Configuration: Number of Handlers	1

Table 3-14. PCI-MXI-2 Shared Memory Tab Default Settings

Setting	Default Value
Share Memory in A32 Space	Selected
Shared Memory: Shared RAM Size	2 GB
Shared Memory: Reserve Physical Memory (KB)	0
Advanced: Lower Half Window: Map Lower Half To	System Memory
Advance: Upper Half Window: Map Upper Half To	System Memory

Table 3-15. PCI-MXI-2 MXI-2 Bus Tab Default Settings

Setting	Default Value
Bus Settings: Bus Timeout	1 ms
System Controller	Auto Detect
Advanced: Bus Protocols: Enable MXI-2 Auto Retry	Checked
Advanced: Bus Protocols: Enabled A24/A32 Write Posting	Checked
Advanced: Bus Protocols: MXI Transfer Limit	256
Advanced: MXI-2 CLK 10 Signal	Receive

Table 3-16. PCI-MXI-2 PCI Tab Default Settings

Setting	Default Value
User Window: Enable Low-Level Register Access API Support	Checked
User Window: User Window Size	64 KB
Enable PCI Expansion ROM	Checked
DMA Setting	Enable DMA on this Controller

Front Panel SMB ExtClk Setup

The VXIpc 870B Series computers have an SMB connector on the front panel for an external clock. Onboard programmable logic can configure the VXIpc 870B Series to drive its 10 MHz VXI CLK10 signal to this connector as an output or to use this connector as an input for the 10 MHz VXI CLK10 signal. In this fashion, you can configure multiple mainframes to operate off a single 10 MHz system clock. Refer to the *CLK10 Source Routing and Termination* section for information on properly configuring the hardware to use the CLK10 routing feature of the VXIpc 770/870B Series.

Front Panel SMB TRGIN/TRGOUT

The VXIpc 870B Series gives programmers full hardware and software control over the VXI trigger lines. The VXIpc 870B Series has two SMB trigger I/O connectors on its front panel for routing any of the TTL trigger lines between the backplane and external devices. The VXI trigger interface is based on the advanced MANTIS ASIC developed by National Instruments. The MANTIS provides the complete VXIpc 870B Series VXI interface to the outer rows of the P2 backplane connector in a single chip. The VXIpc 870B Series can respond to all VXI-defined protocols on all P2 TTL and ECL trigger lines at the same time. The MANTIS features an internal cross-matrix switching system for routing between lines as well as to and from the front panel and onboard clocks. An internal counter gives sophisticated counting of events and interrupting on trigger edges and pulses, as well as generating pulse trains, variable length pulses, and pulse stretching.

You have the option to terminate the external trigger input SMB with 50 Ω to ground to match the driving source, if necessary. Use MAX to set this option.

Watchdog Timer

The Watchdog Timer is an onboard counter/timer. You can use it to monitor running applications and reset the embedded controller or assert a signal should the system lock up.

Currently, there is no software support for the Watchdog Timer. If your application requires the watchdog timer, contact National Instruments support at `ni.com` for detailed instructions on how to program this device.

4

Developing Your Application

This chapter discusses the software utilities you can use to start developing applications that use NI-VXI.

After installing the NI-VXI software, you can begin developing your VXI/VME application. Be sure to check the release notes for the latest application development notes and changes.

NI-VXI, NI-VISA, and Related Terms

Before you develop your application, it is important to understand the difference between *NI-VXI*, *NI-VISA*, and similar terms:

- *NI-VXI* is the software package that ships with National Instruments VXI and VME controllers. NI-VXI includes Measurement & Automation Explorer (MAX), NI-VISA, NI Spy, Resource Manager (Resman), VXI device drivers, and other utilities for configuring and controlling your VXI or VME system.
- *NI-VISA* is the native API for communicating with VXI/VME devices. NI-VISA is the National Instruments implementation of the VISA I/O standard, which is a common interface to many types of instruments (such as VXI, GPIB, PXI, Serial, TCP/IP, and so on). NI-VXI is optimized for use through NI-VISA, and we recommend using NI-VISA to develop all new VXI/VME applications.
- The *NI-VXI API* is an optional development environment that is not part of the default NI-VXI installation. The NI-VXI API was developed before NI-VISA; while NI-VXI still supports the NI-VXI API, we recommend using NI-VISA for all new VXI/VME applications. If you must develop an application using the older NI-VXI API, run the NI-VXI installer and select the appropriate option in the custom installation screen. Be sure to review the *NI-VXI API Notes* section later in this chapter.
- The *NI-VXI compatibility layer* allows older programs that use the NI-VXI API to communicate with VXI devices through VISA. Using this compatibility layer, older programs can run in NI-VXI 3.0 or later without being rewritten to use the VISA interface. This layer installs with NI-VXI by default. It should be completely transparent and

provide a high level of performance; however, there may be some slight changes in behavior for certain applications.

Your software features several system development utilities including MAX, Resman, NI Spy, VISA Interactive Control (VISAIC), and VXI Interactive Control (VIC, optional). You can also access help and a variety of examples to learn how to use NI-VXI for certain tasks.

Each component assists you with one of four development steps: configuration, device interaction, programming, and debugging.

You can access the utilities, help files, and release notes through the Windows **Start** menu by opening the **National Instruments»VXI** or **National Instruments»VISA** program groups.

Configuration

The configuration utilities in your software kit are Resman and MAX.

Resman performs VXI Resource Manager functions as described in the VXIbus specification. Resman configures all devices on the VXI backplane for operation and allocates memory for devices that request it. Resman does not require you to specify any settings; it automatically performs the VXI resource management whenever you run it.

Note Power cycling resets all devices, so you must run Resman to reconfigure your system every time you cycle the power on the chassis.

MAX presents a graphical display of your entire test and measurement system to help you configure various components. When you launch MAX, you see all your devices (including VXI) on the screen. You can view the properties (such as logical address, address space, and so on) of each device by clicking the device in the configuration tree. To see additional configuration options for a given device, right-click the device in the configuration tree. When you access the properties of most National Instruments devices by right-clicking, you can configure the hardware settings by selecting **Hardware Configuration**.

MAX and Resman are designed to work together. You can run Resman through MAX by either clicking the **Run VXI Resource Manager** button in the toolbar or right-clicking a specific VXI system on which to run Resman (refer to Figure 4-1). You can also select **Tools»NI-VXI»VXI Resource Manager** to run Resman on all VXI systems. From the **VXI Options** dialog in the **Tools»NI-VXI** menu, you can also use MAX to

configure Resman to run on all VXI systems automatically when the computer boots. Resman reports to MAX all errors it finds in your system; when you view your VXI system in MAX, you can easily spot any errors that Resman found while configuring the system.

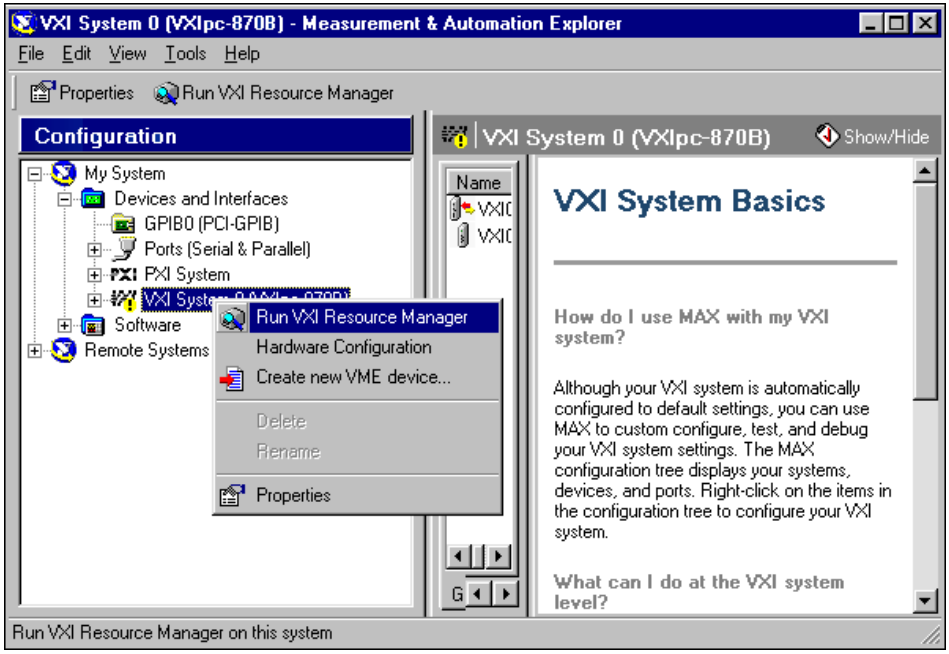

Figure 4-1. Right-Click a VXI System in MAX to Run Resman on that System

After Resman detects and configures all your VXI/VME devices, you can use MAX to view specific information about each device in your system. The default MAX view of a VXI system shows the **General** tab window, which contains a summary of key information about each device, including its device name, logical address, model name, and other data.

For more information about MAX, refer to its help by selecting the **Help**»**Help Topics** menu.

Device Interaction

You can interact with your VXI/VME devices using the VISA Interactive Control (VISAIC) utility. VISAIC allows you to control your VXI/VME devices without using a conventional programming language, LabVIEW, or Measurement Studio. You can also control your devices in MAX by right-clicking a device name and selecting **Open VISA Session**.

Note You can also use VXI Interactive Control Program (VIC) to control your VXI/VME devices and develop and debug VXI application programs. VIC is not included in the default NI-VXI installation; to install it, select **NI-VXI API Development** from the custom installation screen in the installer.

You can launch VISAIC (or VIC) from the **Tools** menu in MAX or from the **VISA** or **VXI** subgroups in **Start»Programs»National Instruments**.

Try the following in VISAIC: In the tree view, navigate using your mouse to the VISA resource for your controller—probably **VXI1::0::INSTR**, representing the VXI system 1, logical address 0 instrument resource (refer to Figure 4-2).

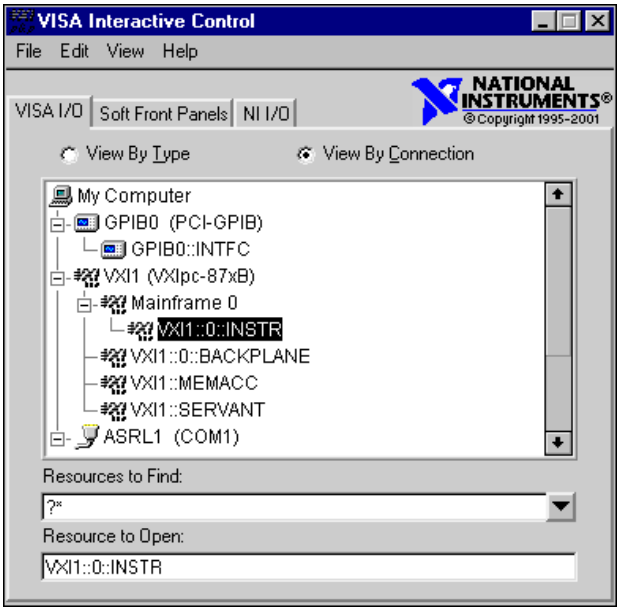

Figure 4-2. Select Your Controller in VISAIC

Open the selected resource and navigate to the **Register I/O** tab. In this tab, you can read registers on your device, such as the VXI device configuration registers. Execute the **viIn** operation (called **In** in LabVIEW compatibility mode) with the default parameters. The **Data Value** field shows the I/O operation result, such as `0x9ff6`. The **Return Value** field shows the function status, such as `0` for `VI_SUCCESS` (see Figure 4-3).

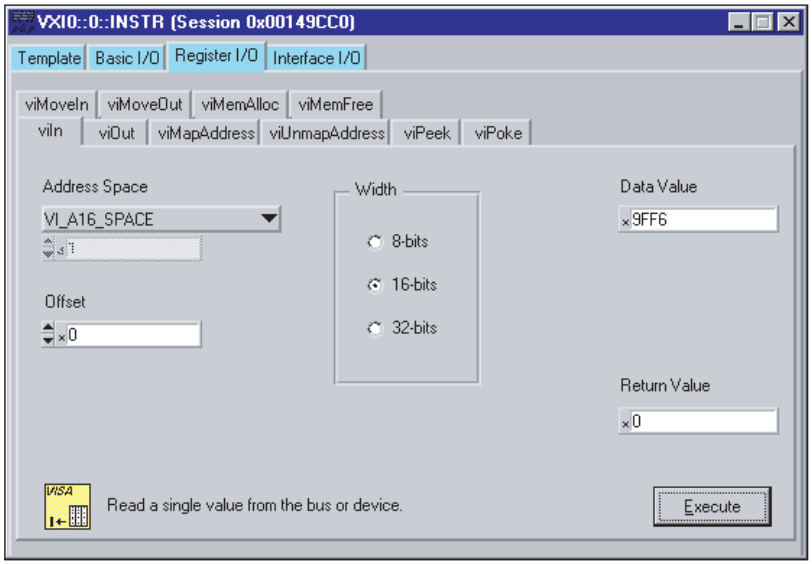

Figure 4-3. Successful viIn Access in the VISAIC Register I/O Tab (This Dialog Box May Look Slightly Different for LabVIEW Users)

If the data value ends in `ff6`, you have successfully read the National Instruments manufacturer ID from your VXI/VME controller's ID register.

You may now want to read the configuration registers from other VXI devices in your system by opening the devices in VISAIC. Try reading a register from each device listed in the MAX view of your VXI system. This way, you can verify that your VXI controller can access each device in your VXI system successfully.

You can also access VXI and VME devices configured in A16, A24, or A32 space by opening the VXI MEMACC resource, which is VISA's representation of VXI memory. For more information about VISAIC operations and commands, refer to the help in the **Help** menu and the context-sensitive help (such as **What's This?**) available by right-clicking in any panel.

Programming for VXI

NI-VISA and the NI-VXI API are the two National Instruments programming interfaces for accessing your VXI/VME instruments. With NI-VXI 3.0 or later, NI-VISA is the native API for communicating with a VXI or VME system, and we recommend using it for all new applications.

Older programs that use the NI-VXI API now use the NI-VXI-to-NI-VISA compatibility layer to communicate with the VXI devices. Using this layer, older programs can run in NI-VXI 3.0 or later without being rewritten to use the VISA interface. For more information about programming with NI-VISA, refer to the *NI-VISA User Manual* and the *NI-VISA Programmer Reference Manual*, which you can find at `ni.com/support`.

Note The NI-VXI API development environment is not installed by default as part of the NI-VXI installation. If you must develop an application using the older NI-VXI API, run the NI-VXI installer and select the appropriate option in the custom installation screen. Be sure to review the *NI-VXI API Notes* section later in this chapter.

NI-VISA is the National Instruments implementation of the VISA API as the VXI*plug&play* standard defines. It provides a common interface to many types of instruments (such as VXI, GPIB, PXI, Serial, TCP/IP, and so on) and therefore is especially useful in situations where you are using multiple types of instruments.

Both NI-VISA and the NI-VXI API include functions for register-level access to VXI instruments and messaging capability to message-based devices. You can also use either interface to service asynchronous events such as triggers, signals, and interrupts, and also assert them. Compatibility with the NI-VXI API is included for legacy applications only—we recommend that you write all new VXI/VME applications in VISA.

The best way to learn NI-VISA programming is by reviewing the example programs your software includes. The examples directory contains working VISA programs that illustrate many different types of applications. You can find these examples in the `VXIpnp\WinNT\NIvisa\Examples` directory.

If you are just getting started, you should learn how to access registers with high-level calls and send messages with word-serial functions. The NI-VISA examples for these tasks are `HighReg.c` and `RdWrt.c`. Refer to the other examples as you try more advanced techniques. Consult the *NI-VISA User Manual* or help for additional information on these topics.

Table 4-1 summarizes the topics the example programs address. (All files are in the `VXIpnp\WinNT\NIvisa\Examples` directory, in the subdirectories listed in Table 4-1.)

Table 4-1. NI-VISA/NI-VXI Examples

Coverage	NI-VISA Example	NI-VXI Example (Optional)
Message-Based Access	`General\RdWrt.c`	`VXIws.c`
High-Level Register Access	`VXI-VME\HighReg.c`	`VXIhigh.c`
Low-Level Register Access	`VXI-VME\LowReg.c`	`VXIlow.c`
Sharing Memory	`VXI-VME\ShareSys.c`	`VXImem.c`
Interrupt Handling	`VXI-VME\AsyncIntr.c` and `WaitIntr.c`	`VXIint.c`
Trigger Handling	`VXI-VME\WaitTrig.c`	`VXItrig.c`

Note MAX includes configuration options that affect low-level functions and shared memory, as well as trigger mappings and other attributes of your VXI system. Refer to the MAX help for information regarding these options.

Optimizing Large VXIbus Transfers

For best performance, keep the following in mind when using `viMove()` or `VXImove()`:

- Make sure your buffers are 32-bit aligned.
- Transfer 32-bit data whenever possible.
- Use VXI block access privileges to significantly improve performance to devices that are capable of accepting block transfers.
- To optimize move performance on virtual memory systems, lock the user buffer in memory yourself so the move operation does not need to lock the buffer.
- To optimize move performance on paged memory systems, use a contiguous buffer so the move operation does not need to build a scatter-gather list for the user buffer.

Note `viMemAlloc()` or `VXImemAlloc()` returns 32-bit aligned, page-locked, contiguous buffers which work efficiently with the move operations.

Shared Memory

In the **Hardware Configuration** settings for your controller in MAX, you can share memory from your embedded controller on the VXI/VME bus. Right-click any setting or consult the MAX help for more information. You can access shared memory on your computer using `viMemAlloc()` in VISA (or `VXImemAlloc()` in the NI-VXI API).

NI-VXI API Notes

The following notes apply only if you are using the NI-VXI API. We recommend that all new VXI/VME applications use the NI-VISA API, but you can still develop with the older NI-VXI API for compatibility with legacy code.

Compiler Symbols

You may need to define certain compiler symbols so that the NI-VXI library can work properly with your program. The required symbol indicates your operating system platform; for example, `VXINT` designates the application as a Windows 2000/NT/XP/Me/98 application.

Note LabWindows/CVI automatically defines the correct symbol. You do not need to define `VXINT` when using LabWindows/CVI.

The additional symbol `BINARY_COMPATIBLE` is optional. It ensures that the resulting application is binary compatible with other National Instruments VXI controllers using the same operating system. This symbol may cause a slight performance degradation when you use low-level VXIbus access functions.

You can define these symbols using `#define` statements in your source code or using the appropriate option in your compiler (typically either `-D` or `/D`). If you use `#define` statements, they must appear in your code before the line that includes the NI-VXI API header `nivxi.h`.

Compatibility Layer Options

Although NI-VXI supports multiple VXI controllers through NI-VISA, the NI-VXI API supports only a single controller. To specify which controller the emulation layer should use, run MAX. Select **Tools»NI-VXI»VXI Options**. Select the VXI system that will support the emulation layer.

In NI-VXI 3.0 or later, when you enable for triggers or interrupts, only the local controller is enabled. In the NI-VXI API functions for enabling triggers and interrupts, the controller parameter is ignored. If you need to enable a remote controller for triggers, use the MAX frame resource to map the trigger back to the local controller.

The interrupt and trigger routing in the NI-VXI 3.0 or later low-level drivers is somewhat different from the default routing in previous versions of NI-VXI. Therefore, the compatibility layer may behave differently than the original NI-VXI API with regard to these settings. In particular, if you are receiving triggers on an external controller, you may need to modify the trigger configuration on your extender module using MAX. In general, interrupts are routed automatically based on the interrupt configuration the resource manager detects. Whether the changed routing behavior affects your program is application dependent.

Because VISA is an instrument-centric API, certain functions from the more controller-centric NI-VXI API do not match perfectly with a VISA counterpart. When an application enables an event with the NI-VXI API compatibility layer, each logical address is enabled for that event separately. For example, if the application enables an interrupt level, VISA will enable the interrupt on each logical address, one at a time, until all the devices are enabled. This means that some interrupts could be lost from devices with higher numbered logical addresses. MAX provides an option for users to pick which logical address is enabled first. Select **Tools»NI-VXI»VXI Options**. Set **Prioritized Signal LA** to the logical address of the device that generates the events. This prevents possible loss of events from that device.

Debugging

NI Spy and VISAIC are useful utilities for identifying the causes of problems in your application.

NI Spy tracks the calls your application makes to National Instruments programming interfaces, including NI-VISA, NI-VXI, and NI-488. NI Spy highlights functions that return errors, so during development you can quickly spot which functions failed during a program's execution. NI Spy can log the calls your program makes to these drivers so you can check them for errors at your convenience, or use the NI Spy log as a reference when discussing the problem with National Instruments technical support. Figure 4-4 shows an example of a normal error returned from a call to `viMemAlloc` when no memory has been shared.

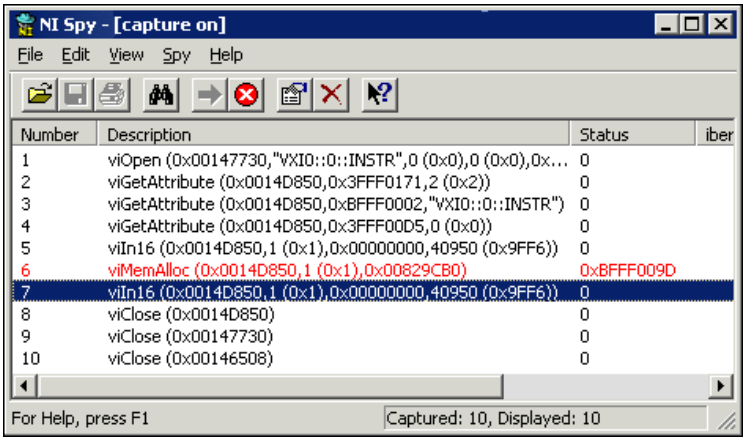

Figure 4-4. NI-Spy

VISAIC, discussed in the *Device Interaction* section of this chapter, is an excellent platform for quickly testing instruments and learning how to communicate with them. Refer to the *NI-VISA User Manual* for more information about using VISAIC.

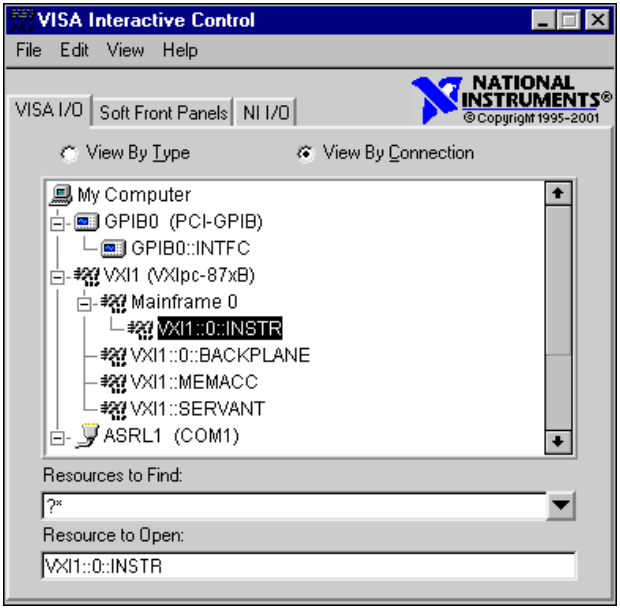

Figure 4-5. VISAIC

5

I/O Information

Front Panel Connectors

Table 5-1 lists various peripherals and their corresponding VXIpc 770/870B series external connectors, bus interfaces, and functions.

Table 5-1. VXIpc 770/870B Series Peripherals Overview

Peripheral	External Connector	Function	VXIpc 770/870B Series Models
Video	15-pin D-SUB (standard VGA)	Integrated with Dynamic Video Memory	All
Serial	COM1 and COM 2 RS-232 serial ports (9-pin D-SUB)	16550 serial port	All
10/100 Ethernet	Ethernet	Ethernet network connection	All
Parallel	Parallel Port (IEEE 1284)	Extended capabilities	All
USB	4-pin Series A receptacle (two ports)	Universal Serial Bus	All
Keyboard	PS/2	PS/2-style keyboard	All
Mouse	PS/2	PS/2-style mouse	All
VXI	TRIG IN, TRIG OUT, EXT CLK (three SMB connectors)	Routing VXI triggers to or from the backplane trigger bus; routing CLK10 to or from the VXI backplane	All
GPIB device	GPIB (IEEE 488.2)	General-Purpose Interface Bus	All

Table 5-1. VXIpc 770/870B Series Peripherals Overview (Continued)

Peripheral	External Connector	Function	VXIpc 770/870B Series Models
SCSI device	68-contact alternative three-shielded SCSI device connector	PCI-to-Ultra2 SCSI	VXIpc 870B Series only
PC Card device	Two PC Card slots	Interface for 16-bit PC Cards and 32-bit CardBus PC Cards	VXIpc 870B Series only
Floppy drive	—	—	VXIpc 870B Series only

Note In this chapter, the VXIpc-871B is shown in Figures 5-1 to 5-9. The connectors are in similar locations on all VXIpc 770/870B series modules.

VGA

Figure 5-1 shows the location and pinouts for the VGA connector on the VXIpc 770/870B series. Table 5-2 lists and describes the VGA connector signals.

AMP manufactures a mating connector with part numbers 748364-1 (housing) and 748333-2 (pin contact).

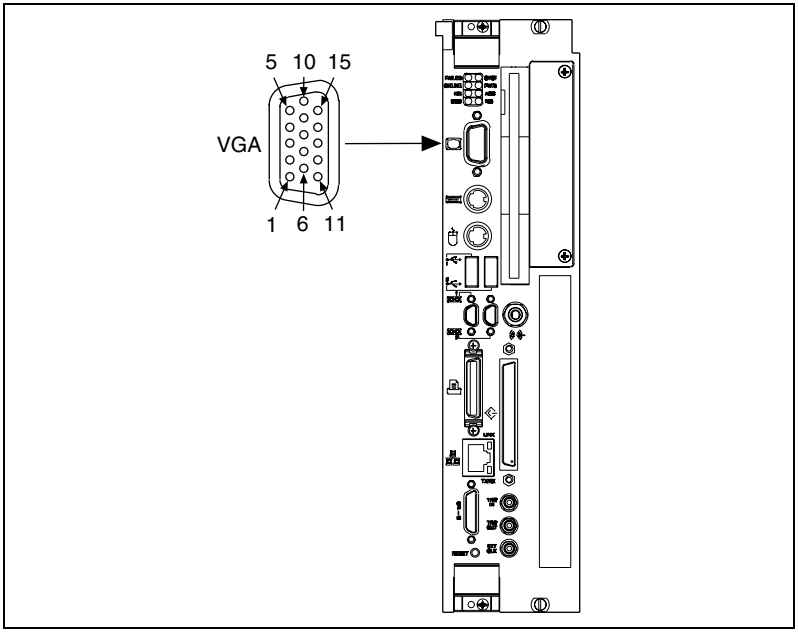

Figure 5-1. VGA Connector Location and Pinout

Table 5-2. VGA Connector Signals

Pin	Signal Name	Signal Description
1	R	Red
2	G	Green
3	B	Blue
4	NC	Not Connected
5	GND	Ground
6	GND	Ground
7	GND	Ground
8	GND	Ground
9	+5V	5 V
10	GND	Ground
11	NC	Not Connected
12	SD	Serial Data

Table 5-2. VGA Connector Signals (Continued)

Pin	Signal Name	Signal Description
13	HSync	Horizontal Sync
14	VSync	Vertical Sync
15	SC	Serial Clock

COM1 and COM2

Figure 5-2 shows the location and pinouts for the COM1 and COM2 connectors on the VXIpc 770/870B series. Table 5-3 lists and describes the COM1 and COM2 connector signal.

AMP manufactures a serial port mating connector, part number 745491-5.

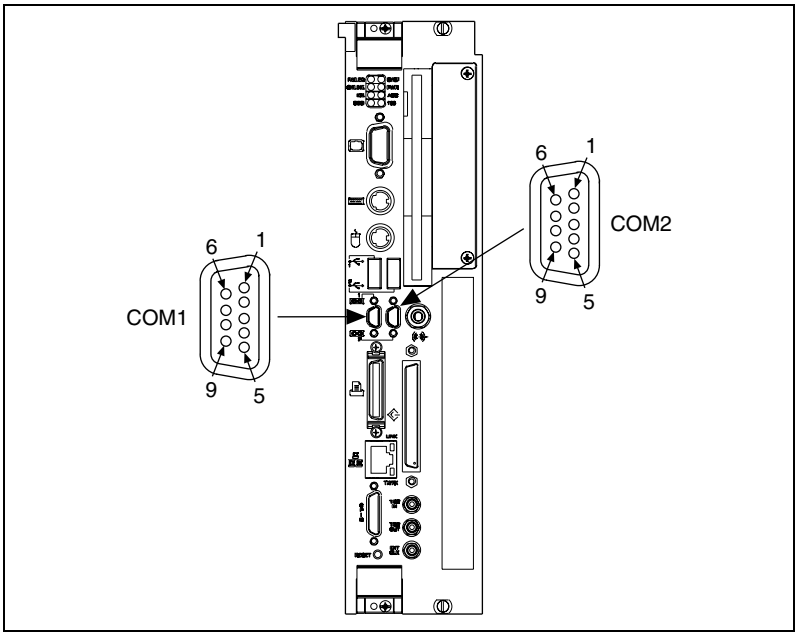

Figure 5-2. COM1 and COM2 Connector Location and Pinout

Table 5-3. COM1 and COM2 Connector Signals

Pin	Signal Name	Signal Description
1	DCD*	Data Carrier Detect
2	RXD*	Receive Data

Table 5-3. COM1 and COM2 Connector Signals (Continued)

Pin	Signal Name	Signal Description
3	TXD*	Transmit Data
4	DTR*	Data Terminal Ready
5	GND	Ground
6	DSR*	Data Set Ready
7	RTS*	Ready to Send
8	CTS*	Clear to Send
9	RI*	Ring Indicator

Ethernet

Figure 5-3 shows the location and pinouts for the Ethernet connector on the VXIpc 770/870B series. Table 5-4 lists and describes the Ethernet connector signals.

AMP manufactures a mating connector, part number 554739-1.

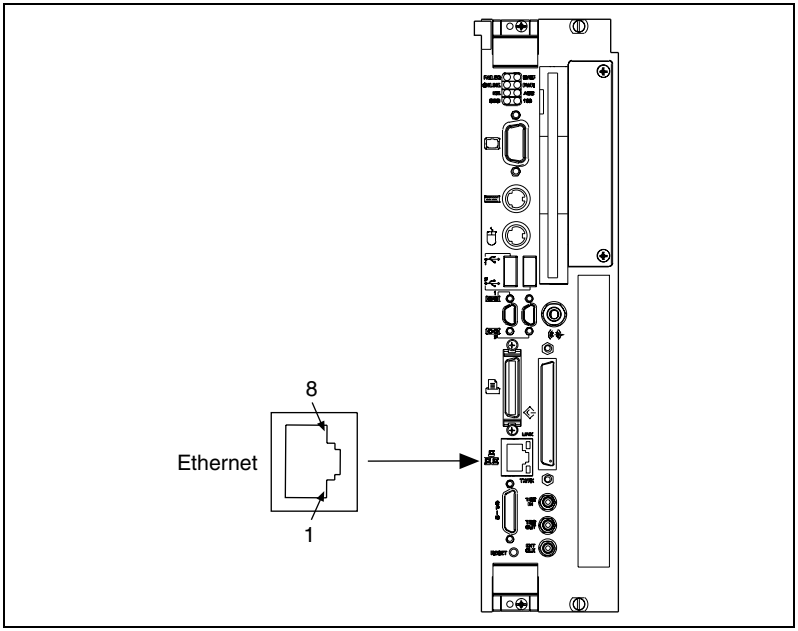

Figure 5-3. Ethernet Connector Location and Pinout

Table 5-4. Ethernet Connector Signals

Pin	Signal Description
1	Differential Transmit
2	Differential Transmit
3	Differential Receive
4	NC
5	NC
6	Differential Receive
7	NC
8	NC

Parallel Port

Figure 5-4 shows the location and pinouts for the IEEE 1284 (parallel) connector on the VXIpc 770/870B series. Table 5-5 lists and describes the IEEE 1284 connector signals.

AMP manufactures a parallel port compatible connector, part number 747052-2.

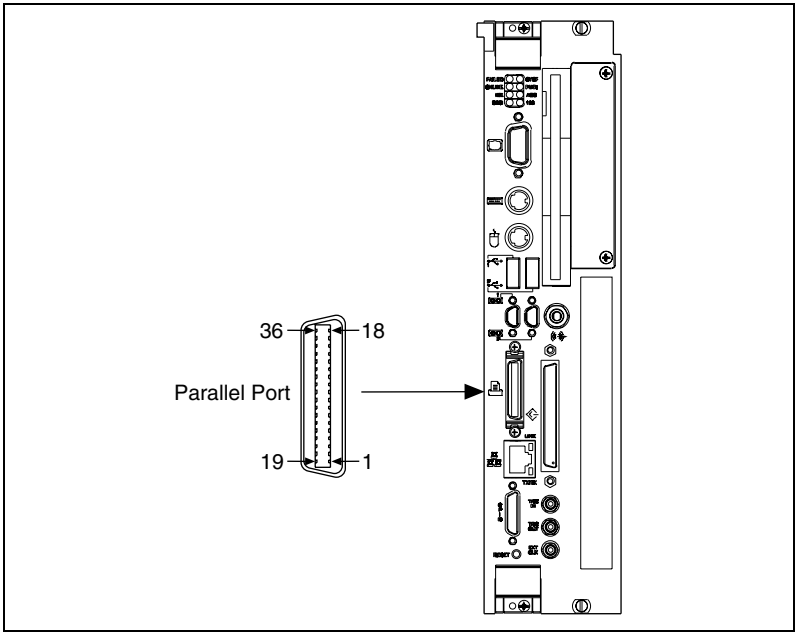

Figure 5-4. Parallel Port Connector Location and Pinout

Table 5-5. Parallel Port Connector Signals

Pin	Default Configuration (LPT)		Floppy Configuration (Refer to *BIOS Configuration* in Chapter 3, *Configuration and Default Settings*)	
	Signal Name	**Signal Description**	**Signal Name**	**Signal Description**
1	BUSY	Device Busy	MTR1*	Motor on Disk 1
2	SLCT	Select	WGATE*	Write Gate
3	ACK*	Acknowledge	DS1*	Drive Select 1
4	FAULT*(ERROR*)	Fault	HDSEL*	Head Select
5	PAPEREND	Paper End	WDATA*	Write Disk Data
6	PD0	Data Bit 0	Index*	Index Pulse Input
7	PD1	Data Bit 1	TRK0*	Track 0
8	PD2	Data Bit 2	WRTPRT*	Write Protected
9	PD3	Data Bit 3	RDATA*	Read Disk Data

Table 5-5. Parallel Port Connector Signals (Continued)

Pin	Default Configuration (LPT)		Floppy Configuration (Refer to *BIOS Configuration* in Chapter 3, *Configuration and Default Settings*)	
	Signal Name	**Signal Description**	**Signal Name**	**Signal Description**
10	PD4	Data Bit 4	DSKCHG*	Disk Change
11	PD5	Data Bit 5	Not Used	—
12	PD6	Data Bit 6	MTR0*	Motor on Disk 0
13	PD7	Data Bit 7	Not Used	—
14	INIT*	Initialize Printer	DIR*	Step Direction
15	STROBE*	Strobe	DS0*	Drive Select 0
16	SLCTIN*	Select Input	STEP*	Step Pulse
17	AUTOFD*	Auto Line Feed	DRVDEN0*	Density Select
18	+5V	+5 V	+5V	+5 V
19-35	GND	Ground	GND	Ground
36	NC	Not Connected	NC	Not Connected

Universal Serial Bus

Figure 5-5 shows the location and pinouts for the Universal Serial Bus (USB) connectors on the VXIpc 770/870B series. Table 5-6 lists and describes the USB connector signals.

AMP manufactures a USB mating connector, part number 787633.

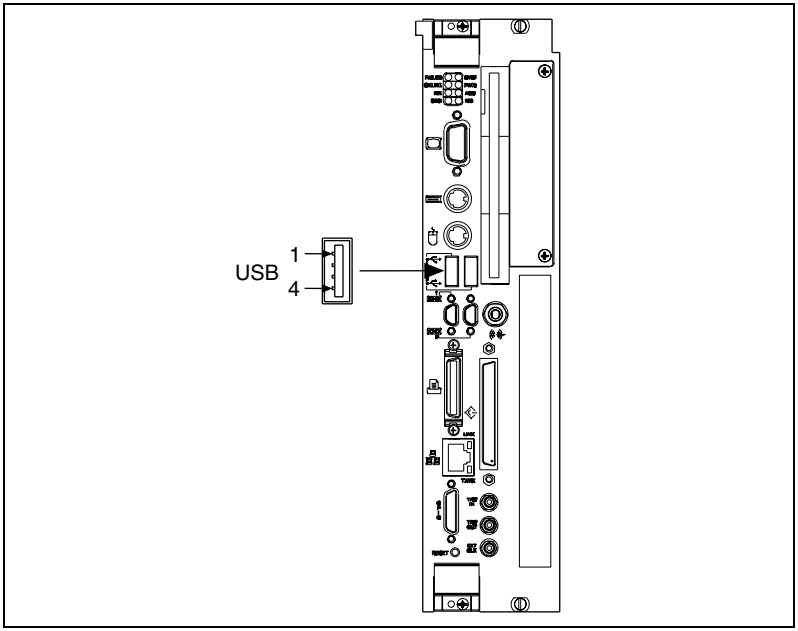

Figure 5-5. USB Connector Location and Pinout

Table 5-6. USB Connector Signals

Pin	Signal Name	Signal Description
1	VCC	Cable Power (+5 V)
2	–Data	USB Data–
3	+Data	USB Data+
4	GND	Ground

PS/2

Figure 5-6 shows the location and pinouts for the PS/2 connectors on the VXIpc 770/870B series. Tables 5-7 and 5-8 list and describe the PS/2 connector signals.

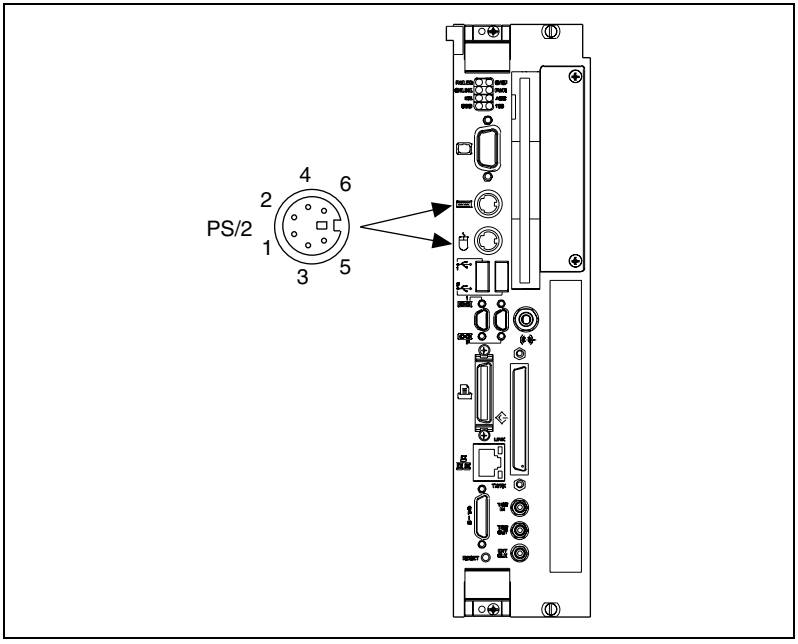

Figure 5-6. PS/2 Connector Location and Pinout

Table 5-7. PS/2 Keyboard Connector Signals

Pin	Signal Name	Signal Description
1	DATA	Keyboard Data
2	NC	NC
3	GND	Ground
4	+5V	+5 V
5	CLK	Keyboard Clock
6	NC	NC

Table 5-8. PS/2 Mouse Connector Signals

Pin	Signal Name	Signal Description
1	DATA	Mouse Data
2	NC	NC
3	GND	Ground
4	+5V	+5 V
5	CLK	Mouse Clock
6	NC	NC

SMB TRGIN/OUT and EXTCLK

The TRG connectors are the software-controlled trigger connections for routing VXI triggers to or from the VXI backplane. For more information, refer to the *Front Panel SMB TRGIN/TRGOUT* section of Chapter 3, *Configuration and Default Settings*.

Figure 5-7 shows the TRG connector locations on the VXIpc 770/870B series. Table 5-9 lists and describes the trigger connector signals.

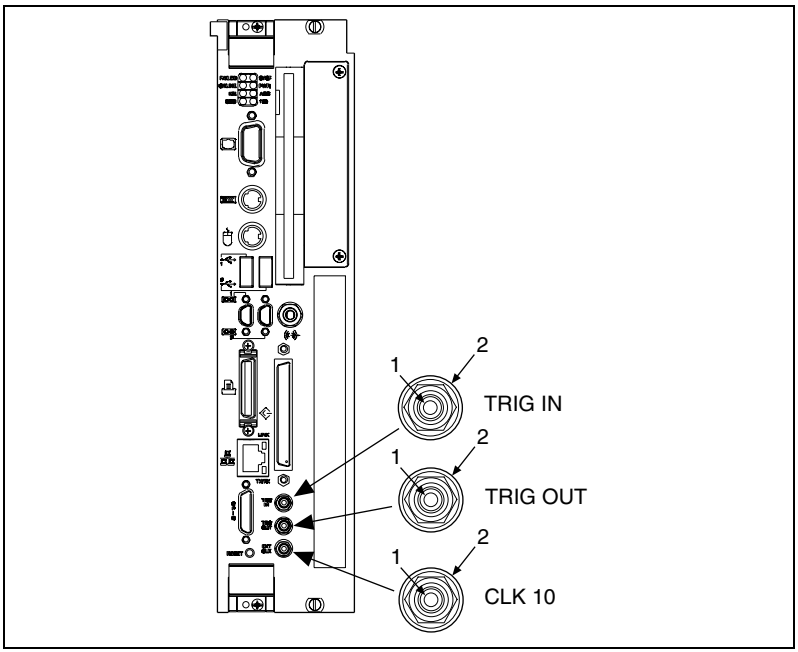

Figure 5-7. SMB Connector Location and Pinout

Table 5-9. TRIG/CLK Connector Signals

Pin	Signal Name	Signal Description
1	SIGNALCONDUCTOR	Trigger/CLK
2 (Shield)	GND	Ground

GPIB (IEEE 488.2)

Figure 5-8 shows the location and pinouts for the GPIB connector on the VXIpc 770/870B series. Table 5-10 lists and describes the GPIB connector signals.

AMP manufactures a GPIB mating connector, part number 554349-01.

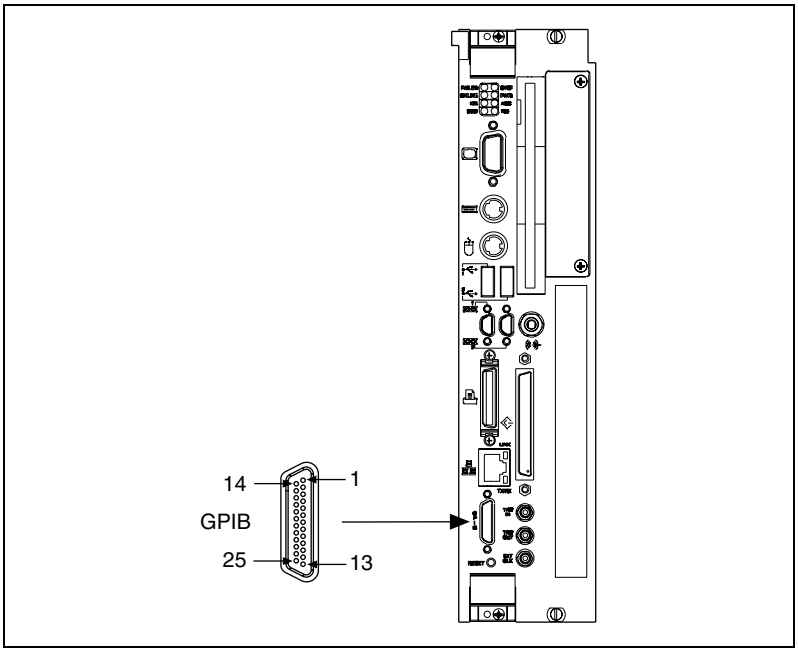

Figure 5-8. GPIB Connector Location and Pinout

Table 5-10. GPIB Connector Signals

Pin	Signal Name	Signal Description
1	DIO1*	Data Bit 1
2	DIO2*	Data Bit 2
3	DIO3*	Data Bit 3
4	DIO4*	Data Bit 4
5	EOI*	End or Identify
6	DAV*	Data Valid
7	NRFD*	Not Ready for Data
8	NDAC*	Not Data Accepted
9	IFC*	Interface Clear
10	SRQ*	Service Request
11	ATN*	Attention
12	SHIELD	Chassis ground
13	DIO5*	Data Bit 5
14	DIO6*	Data Bit 6
15	DIO7*	Data Bit 7
16	DIO8*	Data Bit 8
17	REN*	Remote Enable
18–25	GND	Logic Ground

SCSI

Figure 5-9 shows the location and pinouts for the SCSI connector on the VXIpc 770/870B series. Table 5-11 lists and describes the SCSI connector signals.

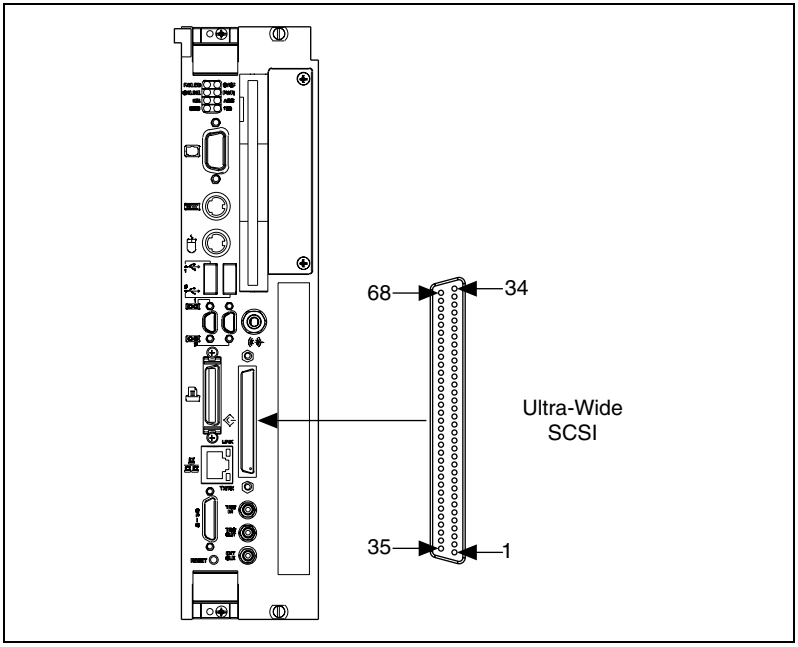

Figure 5-9. SCSI Connector Location and Pinout

Table 5-11. SCSI Connector Signals

Pin	Signal Name	Pin	Signal Name	Pin	Signal Name	Pin	Signal Name
1	+DB(12)	18	TERMPWR	35	–DB(12)	52	TERMPWR
2	+DB(13)	19	RESERVED	36	–DB(13)	53	RESERVED
3	+DB(14)	20	GROUND	37	–DB(14)	54	GROUND
4	+DB(15)	21	+ATN	38	–DB(15)	55	–ATN
5	+DB(P1)	22	GROUND	39	–DB(P1)	56	GROUND
6	+DB(0)	23	+BSY	40	–DB(0)	57	–BSY
7	+DB(1)	24	+ACK	41	–DB(1)	58	–ACK
8	+DB(2)	25	+RST	42	–DB(2)	59	–RST
9	+DB(3)	26	+MSG	43	–DB(3)	60	–MSG
10	+DB(4)	27	+SEL	44	–DB(4)	61	–SEL
11	+DB(5)	28	+C/D	45	–DB(5)	62	–C/D

Table 5-11. SCSI Connector Signals (Continued)

Pin	Signal Name	Pin	Signal Name	Pin	Signal Name	Pin	Signal Name
12	+DB(6)	29	+REQ	46	–DB(6)	63	–REQ
13	+DB(7)	30	+I/O	47	–DB(7)	64	–I/O
14	+P_CRCA	31	+DB(8)	48	–P_CRCA	65	–DB(8)
15	GROUND	32	+DB(9)	49	GROUND	66	–DB(9)
16	DIFFSENS	33	+DB(10)	50	GROUND	67	–DB(10)
17	TERMPWR	34	+DB(11)	51	TERMPWR	68	–DB(11)

Front Panel Features

The VXIpc 770/870B series has the following front-panel features:

- A system reset pushbutton (hold the button for at least 2 seconds to generate a reset to the controller)
- Eight front-panel LEDs that show PC status:
  - The **PWR** LED indicates that the power is on and reset is no longer asserted.
  - The **IDE** LED indicates when an access to the internal hard disk is occurring.
  - The **SCSI** LED indicates activity on the SCSI bus (870B series only).
  - The **100** LED indicates the controller is connected to a 100 base T Ethernet.
  - The **FAILED** LED indicates the VXI interface failed power on diagnostics.
  - The **SYSF** LED indicates that SYSFAIL has been asserted on the VXI backplane.
  - The **ONLINE** LED indicates the Resource Manager has run and the controller is ready for VXI accesses.
  - The **ACC** LED indicates VXI bus activity to or from the VXIpc 770/870B Series controller.
  - The **RSVD** LED (VXIpc 770 Series only) is reserved for future use.

Data Storage

The VXIpc 770/870B Series has the following data storage features:

- Internal IDE hard drive
  - 2.5 in. notebook hard drive
- 1.44 MB floppy disk (VXIpc 870B series only)
- Internal CD-ROM drive (VXIpc-871B and VXIpc-874B only)

You can add additional data storage capacity with a USB CD-ROM drive or USB floppy drive. Contact National Instruments to purchase these devices.

You also can install an ATA flash storage PC Card in the PC Card slots for additional storage capacity (VXIpc 870B Series only).

6

Common Questions and Troubleshooting

This chapter addresses many common questions about the VXIpc 770/870B Series controllers and includes information for troubleshooting common problems you may encounter. If you cannot find the answer to the specific question or problem you have, visit the VXI support page at `ni.com/support`.

General Questions

How do I check the configuration of the memory, floppy drive, hard drive, time/date, and so on?

You can view these parameters in the BIOS setup. To enter the BIOS setup, reboot the VXIpc 770/870B Series and press <Delete> during the memory tests. Refer to the *BIOS Configuration* section of Chapter 3, *Configuration and Default Settings*, for more information.

Can I use the internal IDE drive and an external SCSI hard drive at the same time?

Yes.

Does Windows NT 4.0 support USB and plug and play?

Windows NT 4.0 does not natively support USB. When using Windows NT 4.0, National Instruments does *not* recommend USB CD-ROMs or other USB devices. (USB keyboards and USB mice will work with Windows NT 4.0 when legacy USB is enabled in the BIOS.)

Operating System, Drivers, and Software

What important files and directories are preinstalled on my hard drive?

Your hard drive includes a directory called `images` in its root that contains software and soft copies of manuals for your controller

peripherals. The directory structure under the `images` directory is logically organized into several levels.

In the `images` directory itself, you will find a `manuals` directory, an `os` directory, and directories for each computer peripheral or installed driver.

The `manuals` directory contains quick reference guides, technical reference manuals, and National Instruments software manuals, all in Adobe Acrobat format. To access any manual, change your directory to `c:\images\manuals` and list the contents of that directory. For copies of other National Instruments product manuals, visit `ni.com/manuals`.

The rest of the directories correspond to each peripheral in your system. Within each of these directories are the drivers for the peripherals. These files and directories are copied exactly from the manufacturer distribution disks, so the naming conventions vary from peripheral to peripheral. You can find copies of these peripheral drivers on the VXI support page at `ni.com`.

Because the naming conventions may not be completely straightforward, National Instruments provides a text file named `drivers.txt` in the `c:\images` directory. The `drivers.txt` file explains how to install support for each peripheral. You may want to print this file for reference when you install your peripheral device drivers.

How do I install or reinstall the video driver?

Refer to the `Drivers.txt` file on the hard drive or recovery CD-ROM.

How do I install or reinstall the Ethernet driver?

Refer to the `Drivers.txt` file on the hard drive or recovery CD-ROM.

How do I install or reinstall the GPIB driver?

1. The best way to set up GPIB is to set up networking on your controller so you can access `ni.com` to download the latest drivers. You can access both drivers by going to the current **Drivers and Updates** page.
2. After these drivers are installed, go into the **Device Manager** in the **System Properties** window, delete the **PCI Bridge** and **PCI Communication Device** entries under **Other Devices**, and reboot the controller.
3. When the controller reboots, it correctly finds and installs the proper drivers for the GPIB adapter.

How do I install or reinstall the VXI and VISA drivers?

The best way to install NI-VXI and NI-VISA is to set up networking on your controller so you can access `ni.com` to download the latest drivers that support your controller. If you cannot access the network, copies of these drivers should be available in the `Images` directory on your hard drive.

After you obtain these drivers, uninstall any old versions of NI-VXI or NI-VISA and follow the installation instructions downloaded or included with the driver you want to install.

How do I install software from a CD?

If your controller does not have an integrated CD-ROM drive, you have the following options:

- **USB CD-ROM**—Windows 2000/XP supports USB mass storage devices. With most USB CD-ROM drives, once you plug the drive into the USB port, you should be able to access the drive through a drive letter.
- **SCSI, LPT, or PC card-based CD-ROM**—Other types of CD-ROM drives are available. Check with the vendor to make sure Windows 2000/XP supports the drive.
- **Mapped network drive**—You can use the Ethernet to connect to another computer. If you share the CD-ROM drive on the other computer, you can map the shared CD-ROM drive to a drive letter on the VXIpc 770/870B Series.

How do I flash a new BIOS?

You need to download the new BIOS from `ni.com/support/vxisupp.htm`. To download the new BIOS, follow the instructions on the Web site.

Where do I get the latest software and peripheral drivers?

You can download the latest drivers from `ni.com/support/vxisupp.htm`.

Boot Options

What devices can I boot from?

The VXIpc 770/870B Series can boot from the following devices:

- The internal IDE hard drive.
- The internal 1.44 MB floppy drive (VXIpc 870B Series only).
- The internal CD-ROM drive (VXIpc-871B and VXIpc-874B only).
- An external SCSI hard drive or CD-ROM if an SCSI adapter is used.
- An external USB mass storage device such as a USB hard drive or CD-ROM.
- An external USB floppy drive.
- A network PXE server on the same subnet.

Note There are some limitations when booting from a USB device. Windows does *not* support booting from USB devices. Windows XP can be installed from a USB CD-ROM, but earlier versions of Windows cannot. The VXIpc 770/870B Series BIOS configures the USB devices so they will work in a DOS environment.

How do I configure the controller to boot from these devices?

There are two methods:

- Enter Setup and select the **Boot** menu. You will see a list of all bootable devices, ordered by device type. You can set the boot order using <+> and <–>. Set the order by device type and set the order for the devices listed within the device type.
- To boot from a different device without permanently changing the boot order, press <Esc> during POST. After the BIOS completes the POST and just before the controller boots the OS, the **Boot** menu is displayed. You can select the device type you want to boot from.

Hard Drive Recovery

How do I restore the hard drive image?

VXIpc 770/870B Series controllers with Windows XP include Phoenix Technologies Ltd. Firstware tools, either Recover or Vault, or both. These tools allow you to recover the original factory condition of the hard disk from a small protected area of your hard drive. This protected area contains an image of the hard disk provided to you at the time of shipment. Should

you need to restore your software to its original condition, you can access that image by pressing a hot key during the initial boot process. For more information regarding these tools, refer to the documentation on your hard drive in the `c:\Images\Firstware` directory.

Note Your system hot key is <Alt>. To access the Phoenix Firstware Recover tool, press and hold <Alt> when video appears during the boot process.

VXIpc 770/870B Series controllers also include a recovery CD. There are two methods for recovering the hard disk from the recovery CD.

Recovery from a CD-ROM Drive

These steps apply to a USB CD-ROM, internal IDE CD-ROM, or SCSI CD-ROM drive (when a SCSI adapter is installed).

To recover the hard disk from a CD-ROM, complete the following steps:

1. Load the recovery CD into the CD-ROM drive.
2. Press <Esc> during the BIOS POST. After POST, a boot menu is displayed. Select the CD-ROM drive.
3. The BIOS boots from CD-ROM drive. Follow the prompts to recover the hard drive.

Note Not all CD-ROMs are bootable with the VXIpc 770/870B Series controllers. For a complete list of USB CD-ROM drives that National Instruments has verified as bootable, visit `ni.com`.

Installing an OS

How do I reinstall my OS or install a different OS?

VXIpc 770/870B Series controllers include a preinstalled OS. In some cases, you may want to reinstall the OS or install a different OS. When doing so, consider the following guidelines.

Installing from a CD-ROM

The VXIpc 770/870B Series supports the installation of Windows XP from a USB CD-ROM. However, many other operating systems do not support installation from a USB CD-ROM. For example, Windows 2000 aborts during the install process because it does not have drivers for the CD-ROM device.

With DOS drivers, you can install Windows 9*x* operating systems. However, only a few USB CD-ROM drives have DOS drivers.

As an alternative to a USB CD-ROM drive, you can use an external SCSI CD-ROM with a PXI-SCSI adapter.

Installing from a Network

To install an OS by mapping a CD-ROM drive over a network, refer to `ni.com/support` for instructions.

Cables, Optional Hardware, and Main Power Fuse

How do I connect a standard 25-pin LPT cable to the VXIpc 770/870B Series?

The VXIpc 770/870B Series uses a type C LPT connector. Most parallel port devices use a type A connector. To use a device with a standard type A LPT connector, you need to use a type C-to-type A LPT adapter. To order the adapter, refer to the online catalog at `ni.com`.

My VXIpc-770/771 does not have an internal floppy drive. Is there a way to use an external drive?

Yes. The VXIpc 770/870B Series controllers support and can boot from USB floppy drives. A USB floppy drive will not work with Windows NT 4.0, but will work with Windows 2000/XP. Refer to the *Does Windows NT 4.0 support USB and plug and play?* in the *General Questions* section for more information.

The LPT port on the VXIpc 770/870B Series can also be configured through the BIOS setup for floppy signals instead of LPT signals. Refer to Chapter 5, *I/O Information*, for the floppy drive pinout.

I did not purchase a bootable USB CD-ROM or USB floppy with my VXIpc 770/870B Series controller. How can I obtain one?

Contact National Instruments to purchase these devices.

How do I upgrade system memory?

You can change the amount of installed RAM on the VXIpc 770/870B Series by upgrading the SO-DIMM. Refer to the *Installing and Upgrading RAM* section of Chapter 2, *Installation*, or `ni.com/support` for more information about supported SO-DIMMs and installation instructions.

How do I change the main power fuse?

The VXIpc 770/870B Series is equipped with a user-replaceable fuse on the main power, +5 V from the VXIbus. All other voltages are fused with a resettable-style circuit breaker. The resettable-style circuit breakers do not require user intervention. When a short circuit condition is removed, they automatically reset themselves.

The main power, +5 V, is too high of a current for resettable fuse technology, so your kit includes a replaceable fuse of type 3AG, 15A, 32V Slowblow.

You can replace this fuse without having to remove the cover. The fuse is accessible through the rear of the unit as shown in Figure 6-1.

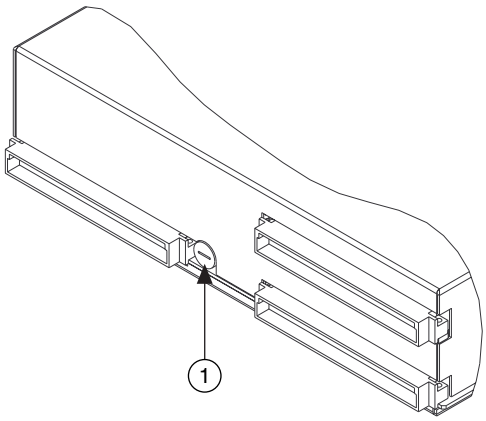

1 Fuse Holder

Figure 6-1. Main Power Fuse Replacement

To replace a fuse, complete the following steps:

1. Turn off the VXI mainframe and remove the VXIpc 770/870B Series module.
2. Using a small flathead screwdriver, turn the fuse holder counter-clockwise until the fuse and holder start to come out of the unit.

Caution Do *not* replace with a higher-rated fuse. This could cause damage to the VXIpc 770/870B, the VXI mainframe, or both.

3. Replace the fuse with the same type fuse.
4. Insert the fuse and hold back into the fuse housing, pushing it all the way in.
5. Screw the fuse holder clockwise until the fuse holder is flush with the fuse housing.
6. Re-install the VXIpc 770/870B and apply power.

Note If the fuse continues to blow, contact National Instruments for assistance.

Troubleshooting

What if the VXIpc 770/870B Series does not boot?

Several problems can cause a controller not to boot. Here are some things to look for and possible solutions.

Things to Notice

- Which LEDs come on? The **PWR** LED should stay lit. The **IDE** LED should blink during boot as the disk is accessed.
- What appears on the display? Does it hang at some particular point (BIOS, Operating System, and so on)? If nothing appears on the screen, try a different monitor. Does your monitor work with a different PC? If it hangs, note the last screen output that you saw for reference when consulting National Instruments technical support.
- What has changed about the system? Did you recently move the system? Was there electrical storm activity? Did you recently add a new module, memory chip, or piece of software?

Things to Try

- Make sure the chassis is plugged in to a working power source.
- Check any fuses or circuit breakers in the chassis or other power supply (possibly a UPS).
- Make sure the controller module is firmly seated in the chassis.
- Remove all other modules from the chassis.
- Remove any nonessential cables or devices.
- Try the controller in a different chassis.
- Try a similar controller in this same chassis.
- Recover the hard drive on the controller. (Refer to the *Hard Drive Recovery* section.)

- Clear the CMOS. (Refer to the *System CMOS* section of Chapter 3, *Configuration and Default Settings*.)

My controller boots fine until I get to Windows, at which point I cannot read the screen. This may include garbled output, white screen, black screen, or an out of sync message from the monitor.

This problem usually results from having the video card output set past the limits of the monitor. You will need to boot Windows in Safe Mode. To do this, reboot the controller. As Windows begins to boot, hold down <F8>. For Windows NT, select **Windows NT (VGA MODE)** from the boot manager. You should now be able to reset the video driver to lower settings. Try setting the resolution to 640 × 480 and the refresh rate to 60 Hz. After you reboot, you can raise these values again, using the test option in Windows. These settings are accessible through the **Advanced** tab of the **Display** item in the **Control Panel**. Alternately, you can try a different monitor, preferably a newer and larger one.

My CMOS is corrupted. How do I set it back to default?

1. Enter the BIOS setup program as described in the *BIOS Configuration* section of Chapter 3, *Configuration and Default Settings*.
2. Press <F9> to load BIOS defaults.
3. Answer **Y** (Yes) to the verification prompt.
4. Select **Save and Exit Setup**.

I can't change the display on the controller from 640 × 480 to 800 × 600. What's wrong?

Be sure the video driver is installed. If it is not, refer to the `Drivers.txt` file on the hard drive or recovery CD-ROM.

What if there is a power loss during a BIOS update?

Create a crisis recovery disk. Unzip `crisis.zip` on the recovery CD. Insert a blank floppy disk in the PC. Run `crisis.exe` (or `Wincrisis.exe` in Windows). Follow the instructions to create the BIOS recovery floppy disk. Insert the disk in the floppy drive and power on the controller. The controller installs the BIOS from the disk.

A

Specifications

This appendix lists the electrical, mechanical, and environmental specifications of the VXIpc 770/870B Series embedded computers.

VXIpc-770

Electrical

Voltage (V)	Current (A)	
	Typical (DC)	Dynamic
+5	7.750 A	3.766 A
–12	0.036 A	0.150 A
+12	0.132 A	0.150 A
–5.2	0.177 A	0.125 A
–2	0.060 A	0.125 A

Physical

Board dimensions..... One-slot VXI C-size module
233.35 by 340 by 30.48 mm
(9.187 by 13.386 by 1.2 in.)

Slot requirements ..... One system slot

Compatibility ..... Fully compatible with
VXI specification

MTBF..... 112,693 h

Weight..... 1.46 kg (3.22 lb)

Operating Environment

Ambient temperature range .....5 to 50 °C (Tested in accordance with IEC-60068-2-1 and IEC-60068-2-2.)

Relative humidity range.....10 to 90%, noncondensing (Tested in accordance with IEC-60068-2-56.)

Altitude .....2,000 m (at 25 °C ambient temperature)

Pollution Degree 2

For indoor or enclosed area use only.

Caution Clean the VXIpc-770 with a soft nonmetallic brush. Make sure that the device is completely dry and free from contaminants before returning it to service.

Storage Environment

Ambient temperature range .....–20 to 70 °C (Tested in accordance with IEC-60068-2-1 and IEC-60068-2-2.)

Relative humidity range.....5 to 95%, noncondensing (Tested in accordance with IEC-60068-2-56.)

Shock and Vibration

Operational shock .....30 g peak, half-sine, 11 ms pulse (Tested in accordance with IEC-60068-2-27. Test profile developed in accordance with MIL-PRF-28800F.)

Random vibration

Operating .....5 to 500 Hz, 0.3 g_{rms} (with solid-state hard drive)

Nonoperating .....5 to 500 Hz, 2.4 g_{rms}

(Tested in accordance with IEC-60068-2-64. Nonoperating test profile exceeds the requirements of MIL-PRF-28800F, Class B.)

Note For full EMC compliance, operate this device with shielded cabling. In addition, all covers and filler panels must be installed. Refer to the Declaration of Conformity (DoC) for this product for any additional regulatory compliance information. To obtain the DoC for this product, visit `ni.com/hardfre.nsf`, search by model number or product line and click the appropriate link in the Certification column.

Safety

This product is designed to meet the requirements of the following standards of safety for electircal equipment for measurement, control, and laboratory use:

- IEC 61010-1, EN 61010-1
- UL 3111-1, UL 61010B-1
- CAN/CSA C22.2 No. 1010.1

Note For UL and other safety certifications, refer to the product label or visit `ni.com/hardref.nsf`, search by model number or product line, and click the appropriate link in the Certification column.

Electromagnetic Compatibility

Emissions ..... EN 55011 Class A at 10 m
FCC Part 15A above 1 GHz

Immunity ..... EN 61326:1997 + A2:2001, Table 1

CD, C-Tick, and FCC Part 15 (Class A) compliant

Note For EMC compliance, operate this device with shielded cabling.

CE Compliance

This product meets the essential requirements of applicable European Directives, as amended for CE marking as follows:

Low-Voltage Directive (safety) 73/23/EEC

Electromagnetic Compatibility
Directive (EMC) 89/336/EEC

Note Refer to the Declaration of Conformity (DoC) for this product for any additional regulatory compliance information. To obtain the DoC for this product, visit `ni.com/hardref.nsf`, search by model number or product line, and click the appropriate link in the Certification column.

VXIpc-771

Electrical

Voltage (V)	Current (A)	
	Typical (DC)	Dynamic
+5	9.750 A	4.158 A
–12	0.036 A	0.150 A
+12	0.132 A	0.150 A
–5.2	0.177 A	0.125 A
–2	0.060 A	0.125 A

Physical

Board dimensions .....One-slot VXI C-size module
233.35 by 340 by 30.48 mm
(9.187 by 13.386 by 1.2 in.)

Slot requirements .....One system slot

Compatibility .....Fully compatible with
VXI specification

MTBF .....112,693 h

Weight .....1.46 kg (3.22 lb) typical

Operating Environment

Ambient temperature range .....5 to 50 °C (Tested in accordance
with IEC-60068-2-1 and
IEC-60068-2-2.)

Relative humidity range.....10 to 90%, noncondensing
(Tested in accordance with
IEC-60068-2-56.)

Altitude..... 2,000 m (at 25 °C ambient temperature)

Pollution Degree 2

For indoor or enclosed area use only.

Caution Clean the VXIpc-771 with a soft nonmetallic brush. Make sure that the device is completely dry and free from contaminants before returning it to service.

Storage Environment

Ambient temperature range..... –40 to 70 °C (Tested in accordance with IEC-60068-2-1 and IEC-60068-2-2.)

Relative humidity range..... 5 to 95% noncondensing (Tested in accordance with IEC-60068-2-56.)

Shock and Vibration

Operational shock ..... 30 g peak, half-sine, 11 ms pulse (Tested in accordance with IEC-60068-2-27. Test profile developed in accordance with MIL-PRF-28800F.)

Random vibration

Operating ..... 5 to 500 Hz, 0.3 g_{rms} (with solid-state hard drive)

Nonoperating ..... 5 to 500 Hz, 2.4 g_{rms}

(Tested in accordance with IEC-60068-2-64. Nonoperating test profile exceeds the requirements of MIL-PRF-28800F, Class B.)

Note For full EMC compliance, operate this device with shielded cabling. In addition, all covers and filler panels must be installed. Refer to the Declaration of Conformity (DoC) for this product for any additional regulatory compliance information. To obtain the DoC for this product, visit `ni.com/hardfre.nsf`, search by model number or product line and click the appropriate link in the Certification column.

Safety

This product is designed to meet the requirements of the following standards of safety for electircal equipment for measurement, control, and laboratory use:

- IEC 61010-1, EN 61010-1
- UL 3111-1, UL 61010B-1
- CAN/CSA C22.2 No. 1010.1

Note For UL and other safety certifications, refer to the product label or visit `ni.com/hardref.nsf`, search by model number or product line, and click the appropriate link in the Certification column.

Electromagnetic Compatibility

Emissions.....EN 55011 Class A at 10 m
FCC Part 15A above 1 GHz

Immunity .....EN 61326:1997 + A2:2001,
Table 1

CD, C-Tick, and FCC Part 15 (Class A) compliant

Note For EMC compliance, operate this device with shielded cabling.

CE Compliance

This product meets the essential requirements of applicable European Directives, as amended for CE marking as follows:

Low-Voltage Directive (safety).....73/23/EEC

Electromagnetic Compatibility
Directive (EMC).....89/336/EEC

Note Refer to the Declaration of Conformity (DoC) for this product for any additional regulatory compliance information. To obtain the DoC for this product, visit `ni.com/hardref.nsf`, search by model number or product line, and click the appropriate link in the Certification column.

VXIpc-871B/872B

Electrical

Voltage (V)	Current (A)	
	Typical (DC)	Dynamic
+5	9.750 A	4.158 A
–12	0.036 A	0.150 A
+12	0.132 A	0.150 A
–5.2	0.177 A	0.125 A
–2	0.060 A	0.125 A

Physical

Board dimensions..... Two-slot VXI C-size module
233.35 by 340 by 60.96 mm
(9.187 by 13.386 by 2.4 in.)

Slot requirements ..... Two system slots

Compatibility ..... Fully compatible with
VXI specification

MTBF
- VXIpc-871B..... 88,704 h
- VXIpc-872B..... 86,503 h

Weight
- VXIpc-871B..... 2.41 kg (5.32 lb)
- VXIpc-872B..... 2.20 kg (4.86 lb)

Operating Environment

Ambient temperature range..... 5 to 50 °C (Tested in accordance
with IEC-60068-2-1 and
IEC-60068-2-2.)

Relative humidity range.....10 to 90%, noncondensing (Tested in accordance with IEC-60068-2-56.)

Altitude .....2,000 m (at 25 °C ambient temperature)

Pollution Degree 2

For indoor or enclosed area use only.

Caution Clean the VXIpc-871B/872B with a soft nonmetallic brush. Make sure that the device is completely dry and free from contaminants before returning it to service.

Storage Environment

Ambient temperature range .....–20 to 70 °C (Tested in accordance with IEC-60068-2-1 and IEC-60068-2-2.)

Relative humidity range.....5 to 95%, noncondensing (Tested in accordance with IEC-60068-2-56.)

Shock and Vibration

Operational shock .....30 g peak, half-sine, 11 ms pulse (Tested in accordance with IEC-60068-2-27. Test profile developed in accordance with MIL-PRF-28800F.)

Random vibration

Operating .....5 to 500 Hz, 0.3 g_{rms} (with solid-state hard drive)

Nonoperating .....5 to 500 Hz, 2.4 g_{rms}

(Tested in accordance with IEC-60068-2-64. Nonoperating test profile exceeds the requirements of MIL-PRF-28800F, Class B.)

Note For full EMC compliance, operate this device with shielded cabling. In addition, all covers and filler panels must be installed. Refer to the Declaration of Conformity (DoC) for this product for any additional regulatory compliance information. To obtain the DoC for this product, visit `ni.com/hardfre.nsf`, search by model number or product line and click the appropriate link in the Certification column.

Safety

This product is designed to meet the requirements of the following standards of safety for electircal equipment for measurement, control, and laboratory use:

- IEC 61010-1, EN 61010-1
- UL 3111-1, UL 61010B-1
- CAN/CSA C22.2 No. 1010.1

Note For UL and other safety certifications, refer to the product label or visit `ni.com/hardref.nsf`, search by model number or product line, and click the appropriate link in the Certification column.

Electromagnetic Compatibility

Emissions ..... EN 55011 Class A at 10 m
FCC Part 15A above 1 GHz

Immunity ..... EN 61326:1997 + A2:2001, Table 1

CD, C-Tick, and FCC Part 15 (Class A) compliant

Note For EMC compliance, operate this device with shielded cabling.

CE Compliance

This product meets the essential requirements of applicable European Directives, as amended for CE marking as follows:

Low-Voltage Directive (safety) 73/23/EEC

Electromagnetic Compatibility
Directive (EMC) 89/336/EEC

Note Refer to the Declaration of Conformity (DoC) for this product for any additional regulatory compliance information. To obtain the DoC for this product, visit `ni.com/hardref.nsf`, search by model number or product line, and click the appropriate link in the Certification column.

VXIpc-874B/875B

Electrical

Voltage (V)	Current (A)	
	Typical (DC)	Dynamic
+5	9.750 A	4.158 A
–12	0.036 A	0.150 A
+12	0.132 A	0.150 A
–5.2	0.177 A	0.125 A
–2	0.060 A	0.125 A

Physical

Board dimensions .....Two-slot VXI C-size module
233.35 by 340 by 60.96 mm
(9.187 by 13.386 by 2.4 in.)

Slot requirements .....Two system slots

Compatibility .....Fully compatible with
VXI specification

MTBF
VXIpc-874B .....88,704 h
VXIpc-875B .....86,503 h

Weight
VXIpc-874B .....2.41 kg (5.32 lb)
VXIpc-875B .....2.20 kg (4.86 lb)

Operating Environment

Ambient temperature range .....5 to 50 °C operating (Tested in
accordance with IEC-60068-2-1
and IEC-60068-2-2.)

Relative humidity range ..... 10 to 90%, noncondensing (Tested in accordance with IEC-60068-2-56.)

Altitude..... 2,000 m (at 25 °C ambient temperature)

Pollution Degree 2

For indoor or enclosed area use only.

Caution Clean the VXIpc-874B/875B with a soft nonmetallic brush. Make sure that the device is completely dry and free from contaminants before returning it to service.

Storage Environment

Ambient temperature range..... –20 to 70 °C operating (Tested in accordance with IEC-60068-2-1 and IEC-60068-2-2.)

Relative humidity range ..... 5 to 95%, noncondensing (Tested in accordance with IEC-60068-2-56.)

Shock and Vibration

Operational shock ..... 30 g peak, half-sine, 11 ms pulse (Tested in accordance with IEC-60068-2-27. Test profile developed in accordance with MIL-PRF-28800F.)

Random vibration

Operating ..... 5 to 500 Hz, 0.3 g_{rms} (with solid-state hard drive)

Nonoperating ..... 5 to 500 Hz, 2.4 g_{rms}

(Tested in accordance with IEC-60068-2-64. Nonoperating test profile exceeds the requirements of MIL-PRF-28800F, Class B.)

Note For full EMC compliance, operate this device with shielded cabling. In addition, all covers and filler panels must be installed. Refer to the Declaration of Conformity (DoC) for this product for any additional regulatory compliance information. To obtain the DoC for this product, visit `ni.com/hardfre.nsf`, search by model number or product line and click the appropriate link in the Certification column.

Safety

This product is designed to meet the requirements of the following standards of safety for electircal equipment for measurement, control, and laboratory use:

- IEC 61010-1, EN 61010-1
- UL 3111-1, UL 61010B-1
- CAN/CSA C22.2 No. 1010.1

Note For UL and other safety certifications, refer to the product label or visit `ni.com/hardref.nsf`, search by model number or product line, and click the appropriate link in the Certification column.

Electromagnetic Compatibility

Emissions.....EN 55011 Class A at 10 m
FCC Part 15A above 1 GHz

Immunity .....EN 61326:1997 + A2:2001,
Table 1

CD, C-Tick, and FCC Part 15 (Class A) compliant

Note For EMC compliance, operate this device with shielded cabling.

CE Compliance

This product meets the essential requirements of applicable European Directives, as amended for CE marking as follows:

Low-Voltage Directive (safety).....73/23/EEC

Electromagnetic Compatibility
Directive (EMC).....89/336/EEC

Note Refer to the Declaration of Conformity (DoC) for this product for any additional regulatory compliance information. To obtain the DoC for this product, visit `ni.com/hardref.nsf`, search by model number or product line, and click the appropriate link in the Certification column.

Front Panel Layout and Dimensions

The following figures show the front panel layout and dimensions for the VXIpc 770 Series and VXIpc 870B Series. Dimensions are in inches [millimeters].

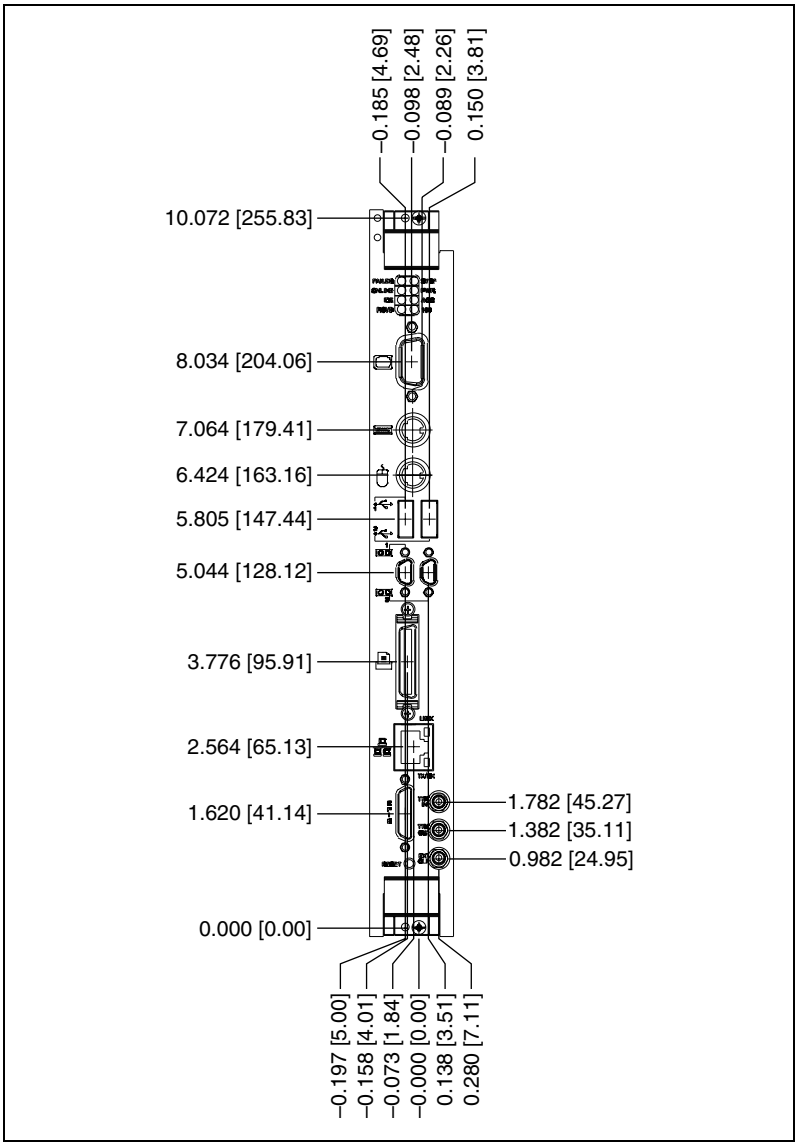

Figure A-1. VXIpc 770 Series Front Panel Layout and Dimensions

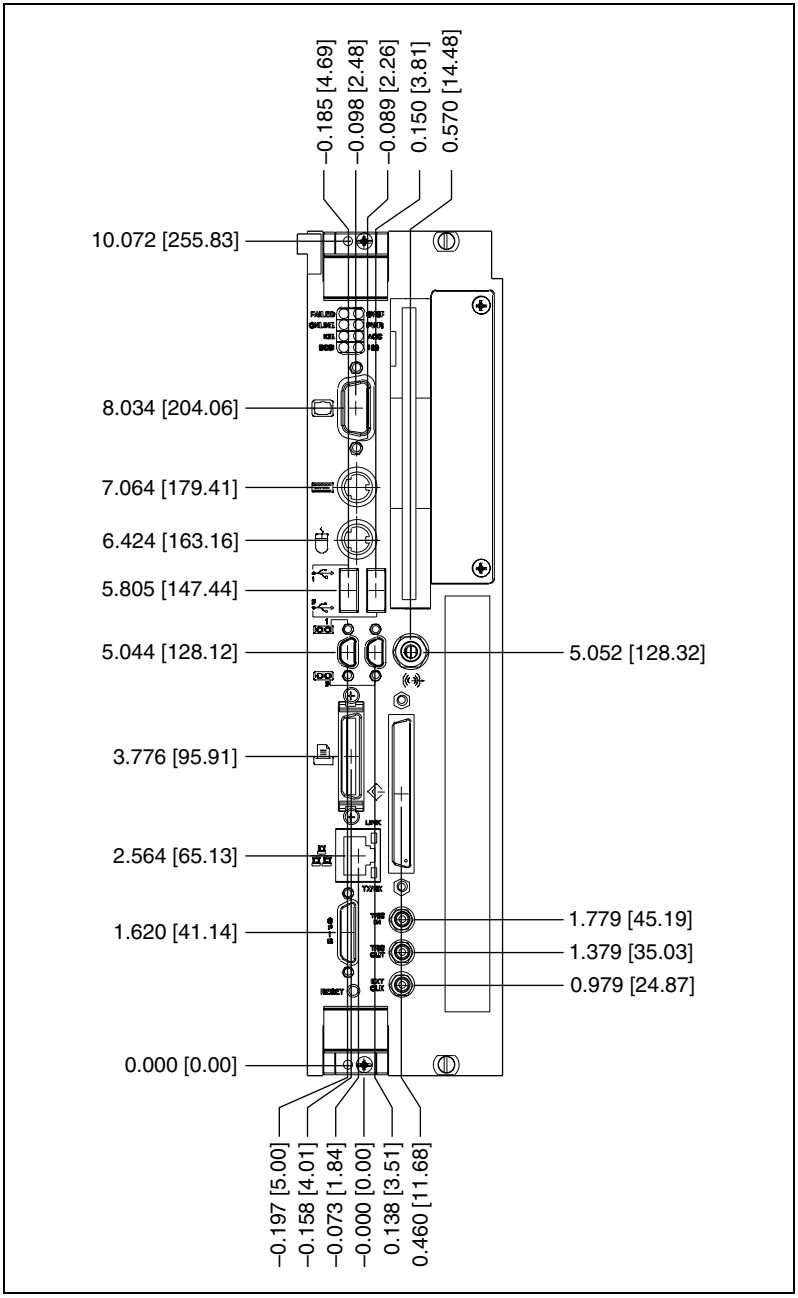

Figure A-2. VXIpc-871B/874B Front Panel Layout and Dimensions

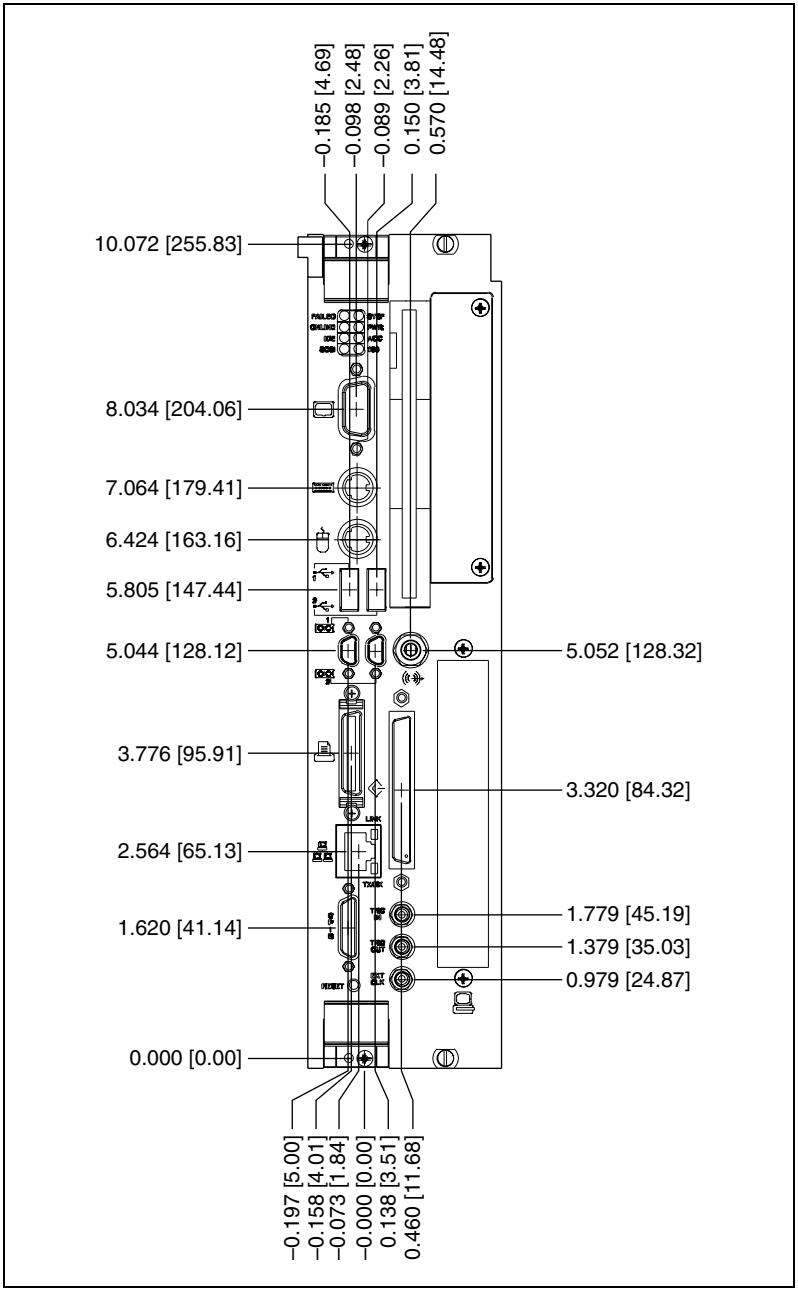

Figure A-3. VXIpc-872B/875B Front Panel Layout and Dimensions

B

Modifying and Installing I/O Expansion Boards

This appendix explains how to modify and install an I/O board in the VXIpc-872B and VXIpc-875B controllers.

Height of Plug-In Boards

In general, the VXIpc-872B and VXIpc-875B can accommodate any standard-size PCI card. The height of an I/O card is measured from the bottom of the bus connector to the top of the board, as shown in Figure B-1.

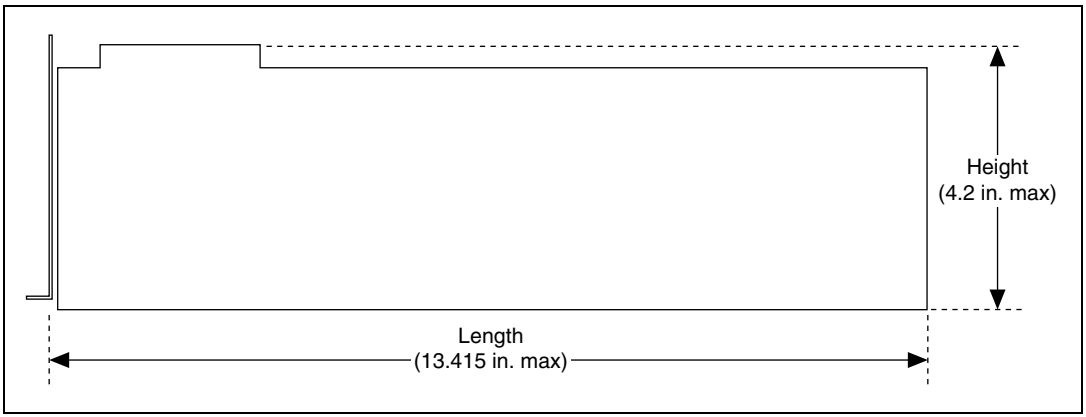

Figure B-1. I/O Board Dimensions for VXIpc-872B and VXIpc-875B Expansion Slot

Installing an I/O Board

This section leads you through the steps to install an expansion board in the VXIpc-872B and VXIpc-875B.

Materials Needed

You need the following items to install the expansion board:

- A user-defined panel is required on the expansion boards based on National Instruments blank PCI panel. The panel should be manufactured from 0.03 in. (0.76 mm) thick 1010 cold rolled steel. The finish should be 0.0003 in. (0.008 mm) nickel plate over 0.0001 in. (0.003 mm) copper flash. Contact National Instruments if you have any questions about specifications for user-defined panels.

  As an alternative, you can modify the blank panel provided with the VXIpc-872B and VXIpc-875B. Custom panel design services are available from National Instruments for a nominal fee.
- PEM nut or a 4-40 nut with lock washer (hole diameter should be 0.125 in. [3.18 mm]).
- 4-40 × 1/4 in. stainless steel panhead screw.

Installation Steps

Complete the following steps to install the expansion board:

1. Notice that the VXIpc-872B and VXIpc-875B include one card guide to secure the top of a PCI plug-in board. You may use the card guide in either of two locations, depending on the length of your installed board. Loosen the screw holding the guide and rotate the guide to the uppermost position for PCI boards. Refer to Figure B-2.
2. Replace the manufacturer-supplied panel bracket with the custom bracket. The two holes in the bracket align with existing holes in the VXIpc-872B and VXIpc-875B front panel.
3. Seat the board firmly in the PCI expansion slot connector.
4. Attach the board to the front panel with the two screws. You can use a PEM nut on the back (far) side of the bracket, or a 4-40 nut with a lock washer (hole diameter should be 0.125 in.). In either case, use a 4-40 × 1/4 in. stainless steel panhead screw to mount the board/bracket assembly to the front panel.

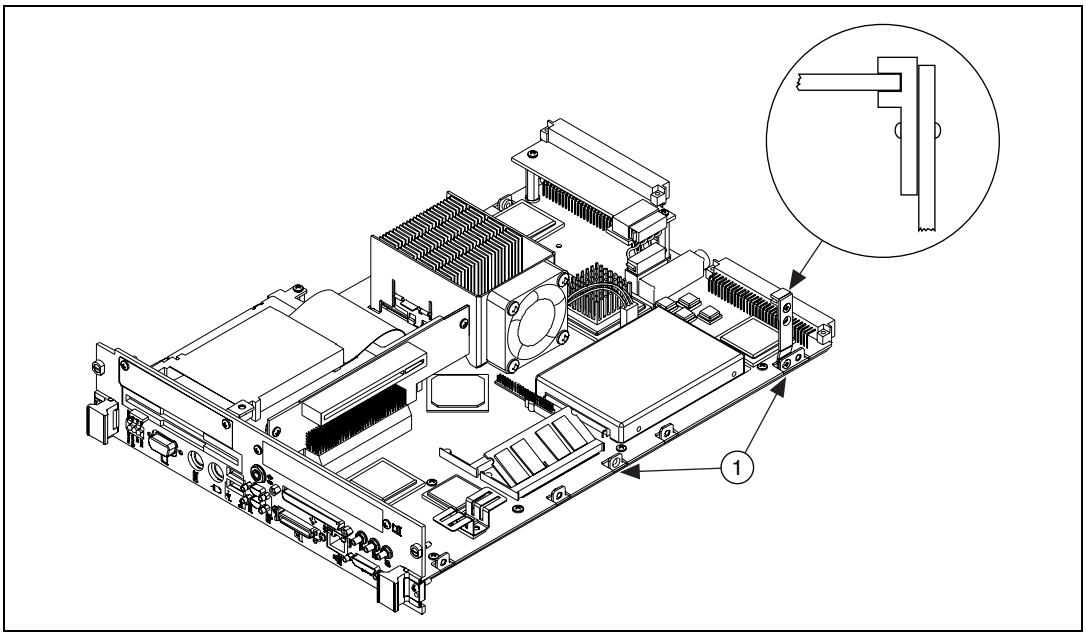

1	Card Guide Installation Locations

Figure B-2. Card Guide Configuration and Location for a PCI Expansion Card in a VXIpc-872B and VXIpc-875B

Note In Figure B-3, dimensions are given in inches and millimeters, with the millimeter dimensions in square brackets.

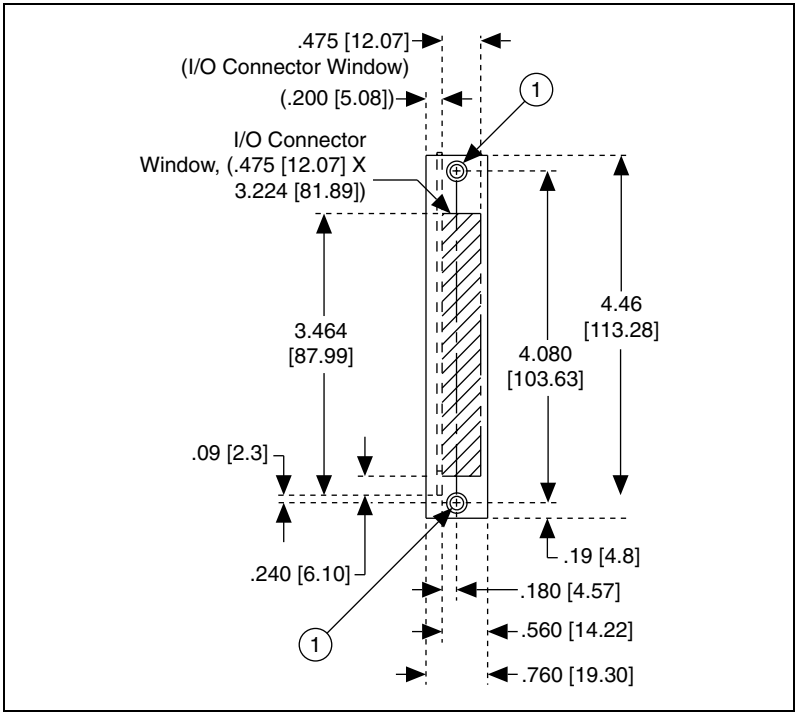

1 Install PEM self-clinching nut, P/N CLS-440-0, per manufacturer's specifications, far side, or drill through Ø.125 [3.18] for 4-40 screw and nut.

Figure B-3. Front View of PCI Board Expansion Bracket

C

Technical Support and Professional Services

Visit the following sections of the National Instruments Web site at `ni.com` for technical support and professional services:

- **Support**—Online technical support resources at `ni.com/support` include the following:
  - **Self-Help Resources**—For immediate answers and solutions, visit the award-winning National Instruments Web site for software drivers and updates, a searchable KnowledgeBase, product manuals, step-by-step troubleshooting wizards, thousands of example programs, tutorials, application notes, instrument drivers, and so on.
  - **Free Technical Support**—All registered users receive free Basic Service, which includes access to hundreds of Application Engineers worldwide in the NI Developer Exchange at `ni.com/exchange`. National Instruments Application Engineers make sure every question receives an answer.
- **Training and Certification**—Visit `ni.com/training` for self-paced training, eLearning virtual classrooms, interactive CDs, and Certification program information. You also can register for instructor-led, hands-on courses at locations around the world.
- **System Integration**—If you have time constraints, limited in-house technical resources, or other project challenges, NI Alliance Program members can help. To learn more, call your local NI office or visit `ni.com/alliance`.

If you searched `ni.com` and could not find the answers you need, contact your local office or NI corporate headquarters. Phone numbers for our worldwide offices are listed at the front of this manual. You also can visit the Worldwide Offices section of `ni.com/niglobal` to access the branch office Web sites, which provide up-to-date contact information, support phone numbers, email addresses, and current events.

Glossary

Symbol	Prefix	Value
n	nano	10^{-9}
µ	micro	10^{-6}
m	milli	10^{-3}
k	kilo	10^{3}
M	mega	10^{6}
G	giga	10^{9}
T	tera	10^{12}

Symbols

°	degrees
Ω	ohms
%	percent

A

A	amperes
AC	Alternating Current
ASIC	application-specific integrated circuit

B

B	bytes
backplane	An assembly, typically a printed circuit board, with connectors and signal paths that bus the connector pins.

BIOS	Basic Input/Output System. BIOS functions are the fundamental level of any PC or compatible computer. BIOS functions embody the basic operations needed for successful use of the computer's hardware resources.

C

C	Celsius
cache	Small portion of high-speed memory used for temporary storage of frequently used data
CMOS	Complementary Metal Oxide Semiconductor; a process used in making chips
CompactPCI	An adaptation of the PCI specification for industrial and/or embedded applications that require a more robust mechanical form factor than desktop PCI. CompactPCI provides a standard form factor for those applications requiring the high performance of PCI as well as the small size and ruggedness of a rack-mount system.

D

DC	Direct Current
DIMM	Dual In-line Memory Module
DMA	Direct Memory Access; a method by which data is transferred between devices and internal memory without intervention of the central processing unit
DRAM	Dynamic RAM (Random Access Memory); storage that the computer must refresh at frequent intervals

E

ECP	Extended Capabilities Parallel
EDO	Extended Data Out
EEPROM	Electronically Erasable Programmable Read Only Memory

embedded controller	An intelligent CPU (controller) interface plugged directly into the PXI backplane, giving it direct access to the PXI bus. It must have all of its required PXI interface capabilities built in.
EMC	Electromagnetic Compatibility
EMI	electromagnetic interference
EPP	Enhanced Parallel Port
expansion ROM	An onboard EEPROM that may contain device-specific initialization and system boot functionality.

F

FCC	Federal Communications Commission

G

g	1. grams 2. A measure of acceleration equal to 9.8 m/s^2.
GPIB	General Purpose Interface Bus (IEEE 488)
g_{rms}	A measure of random vibration. The root mean square of acceleration levels in a random vibration test profile.

H

Hz	hertz; cycles per second

I

I/O	input/output; the techniques, media, and devices used to achieve communication between machines and users
IDE	Integrated Drive Electronics; hard disk and built-in controller
IEEE	Institute of Electrical and Electronics Engineers
in.	inches

instrument driver	A set of routines designed to control a specific instrument or family of instruments, and any necessary related files for LabWindows/CVI or LabVIEW.
interrupt	A means for a device to request service from another device.
interrupt level	The relative priority at which a device can interrupt.
IRQ*	Interrupt signal
ISA	Industry Standard Architecture; the original PC bus architecture, specifically the 16-bit AT bus

K

KB	kilobytes of memory

L

LAN	Local Area Network; communications network that serves users within a confined geographical area. It is made up of servers, workstations, a network operating system, and a communications link.
LED	light-emitting diode

M

m	meters
master	A functional part of a PXI device that initiates data transfers on the PXI backplane. A transfer can be either a read or a write.
MB	megabytes of memory
MTBF	Mean time between failure
MTTR	Mean time to repair

N

NI-488 or NI-488.2	The National Instruments software for GPIB systems
NI-DAQ	The National Instruments software for data acquisition instruments
NI-VISA	The National Instruments implementation of the VISA standard; an interface-independent software that provides a unified programming interface for VXI, GPIB, and serial instruments
NMI	Non-maskable interrupt; high-priority interrupt that cannot be disabled by another interrupt. It is used to report malfunctions such as parity, bus and math coprocessor errors.

P

PCI	Peripheral Component Interconnect. The PCI bus is a high-performance 32-bit or 64-bit bus with multiplexed address and data lines.
PCMCIA	Personal Computer Memory Card International Association
peripheral	any hardware device connected to a computer, such as a monitor, keyboard, printer, plotter, disk or tape drive, graphics tablet, scanner, mouse, and so on
POSC	Power On Self Configuration
PXI	PCI eXtensions for Instrumentation; an open implementation of CompactPCI that adds electrical features that meet the high-performance requirements of instrumentation applications by providing triggering, local buses, and system clock capabilities. PXI also offers two-way interoperability with CompactPCI products.

R

RAM	Random Access Memory; the computer's primary workspace
RAMDAC	Random Access Memory Digital to Analog Converter; the VGA controller chip that maintains the color palette and converts data from memory into analog signals for the monitor
resource	hardware settings used by devices in a computer system, including ISA interrupt level, DMA channel, and I/O address

RMS — Root mean squared. *See also* g_{rms}.

RTC — Real Time Clock; an electronic circuit that maintains the time of day, and can also provide timing signals for timesharing operations

S

s — seconds

slave — A functional part of a PXI device that detects data transfer cycles initiated by a PXI bus master and responds to the transfers when the address specifies one of the device's registers.

SO-DIMM — Small Outline Dual In-line Memory Module

SRAM — Static RAM; a memory chip that requires power to hold its content. It does not require refresh circuitry as a dynamic RAM chip, but it does take up more space and uses more power.

ST — Start Trigger

Star Trigger Slot — This slot is located at Slot 2 in a PXI mainframe and has a dedicated trigger line between each peripheral slot. This slot would be used for a module with ST functionality that can provide individual triggers to all other peripherals.

U

USB — Universal Serial Bus

V

V — Volts

VGA — Video Graphics Array; the minimum video display standard for all PCs

W

W — Watts

Index

Numerics

100 LED, 5-15

A

Advanced Setup menu, 3-11
application development, 4-1
    configuration, 4-2
    debugging, 4-9
    NI-VXI API compatibility layer options, 4-8
    NI-VXI API compiler symbols, 4-8
    NI-VXI API notes, 4-8
    optimizing large VXIbus transfers, 4-7
    programming for VXI, 4-5
    programming with VXI, example programs (table), 4-7
    shared memory, 4-8
automatic-detection configuration, 3-5

B

BIOS
    checking settings, 6-1
    flashing new BIOS, 6-3
    power loss during update, 6-9
    setup
        Advanced Setup menu, 3-11
        Boot Setup menu, 3-14
        DMI Event Logging menu, 3-10
        entering, 3-9
        Exiting BIOS Setup menu, 3-14
        Integrated Peripherals menu, 3-12
        Main Setup menu, 3-10
        Security Setup menu, 3-13
boot options
    configuring controller, 6-4
Boot Setup menu, 3-14

C

CD-ROM drive
    installing software from, 6-3
CLK10
    signal generation, 3-8
    Source (figure), 3-8
    source routing and termination, 3-8
CMOS, setting back to default, 6-9
COM1 and COM2 connectors
    connector locations and pinout (figure), 5-4
    connector signals (table), 5-4
common configuration questions
    boot options, 6-4
    cables, optional hardware, and main power fuse, 6-6
    general questions, 6-1
    hard drive recovery, 6-4
configuration, 4-2
    BIOS configuration, 3-9
    common questions
        boot options, 6-4
        cables, optional hardware, and main power fuse, 6-6
        general questions, 6-1
        hard drive recovery, 6-4
    installing an OS, 6-5
    Measurement and Automation Explorer (MAX), 3-15
    MITE EEPROM, 3-6
    system CMOS, 3-3
connectors
    COM1 and COM2 connectors and signals, 5-4

Ethernet connector and signals, 5-5
GPIB connector and signals, 5-12
parallel port connector and signals, 5-6
peripheral expansion overview (table), 5-1
PS/2 connector and signals, 5-9
SCSI connector and signals, 5-13
SMB TRGIN/OUT and EXTCLK, 5-11
Universal Serial Bus (USB) connector and signals, 5-8
VGA connector and signals, 5-2

D

data storage, 5-16
debugging, 4-9
developing your application, 4-1
device interaction
    application development
        device interaction, 4-3
diagnostic tools (NI resources), C-1
DMI Event Logging menu, 3-10
documentation
    conventions used in the manual, *ix*
    how to use this documentation set, *ix*
    NI resources, C-1
    related documentation, *x*
drivers
    installation
        GPIB (IEEE 488.2), 6-2
        video, 6-2
    NI resources, C-1
    obtaining latest drivers, 6-3

E

EEPROM, 3-6
    configuration, 3-7
    fixing an invalid configuration, 3-7
electrostatic discharge, 2-1
Ethernet connector
    location and pinout (figure), 5-5
    signals (table), 5-6
examples (NI resources), C-1
Exiting BIOS Setup menu, 3-14
EXTCLK, 5-11

F

FAILED LED, 5-15
floppy drive, using external floppy drive, 6-6
front panel
    connectors, 5-1
    features, 5-15
front panel SMB ExtClk setup, 3-21

G

GPIB (IEEE 488.2), 5-12
    connector location and pinout (figure), 5-12, 5-14
    connector signals (table), 5-13
    driver installation, 6-2

H

hard drive, 5-16
    jumper, 3-4
    restoring image, 6-4
hardware defaults, 3-1
help, technical support, C-1

I

IDE controller, using SCSI hard drive in addition, 6-1
IDE LED, 5-15
IEEE 488.2, 5-12
images directory, 6-2

installation, 2-1
See also configuration
removing VXIpc 770/870B series from VXI chassis, 2-3
VXIpc-871B installed in a VXI chassis (figure), 2-3
instrument drivers (NI resources), C-1
Integrated Peripherals menu, 3-12

J

jumper settings (table), 3-2

K

keyboard and mouse, overview (table), 5-1
keyboard, adapter cable for, 2-2
KnowledgeBase, C-1

L

LabVIEW, 1-5
LEDs, front panel LEDs, 5-15
LPT cable, connecting to VXIpc 770/870B series, 6-6

M

Main Setup menu, 3-10
manuals directory, 6-2
mating connector
COM1 and COM2, 5-4
Ethernet, 5-5
GPIB (IEEE 488.2), 5-12
parallel port, 5-6
USB, 5-8
VGA, 5-2
Measurement and Automation Explorer (MAX), 3-15
memory, shared, 4-8
MITE EEPROM
See also EEPROM
configuration, 3-6
power on self configuration, 3-6
user/factory configuration, 3-6
mouse, 2-2

N

National Instruments software, 1-4
National Instruments support and services, C-1
NI-VISA, definition, 1-4, 4-1
NI-VISA/NI-VXI software, example programs (table), 4-7
NI-VXI
API notes, 4-8
compatibility layer options, 4-8
compiler symbols, 4-8
definition, 1-4, 4-1

O

onboard jumper and switch settings (table), 3-2
ONLINE LED, 5-15
optimizing large VXIbus transfers, 4-7
os directory, 6-2
OS installation, 6-5
from CD-ROM, 6-5
from network, 6-6

P

parallel port
connector location and pinout (figure), 5-7
connector signals (table), 5-7
overview (table), 5-1
parts locator diagram (figure), 3-2

PC configuration options, SCSI termination, 3-4
peripheral expansion overview (table), 5-1
plug and play, Windows NT 4.0 support, 6-1
POSC (power-on self-configuration), 3-6
power-on self-configuration (POSC), 3-6
programming examples (NI resources), C-1
programming for VXI, 4-5
PS/2
    connector location and pinout (figure), 5-10
    keyboard connector signals (table), 5-10
    mouse connector signals (table), 5-11
PWR LED, 5-15

R

RAM, upgrading, 6-6

S

SCSI, 5-13
    connector signals (table), 5-14
    termination, 3-4
SCSI LED, 5-15
Security Setup menu, 3-13
serial ports, 5-1
    See also COM1 and COM2 connectors
shared memory, 4-8
Slot 0, as system controller, 3-5
SMB TRGIN/OUT, 5-11
SO-DIMMs
    installing, 6-6
        figure, 2-5
software
    See also drivers
    configuration, 3-15
    installing from CD-ROM, 6-3
    LabVIEW, 1-5
    National Instruments software, 1-4
    NI resources, C-1
    NI-VISA, 1-4
    NI-VXI, 1-4
specifications
    VXIpc 770 Series, front panel layout and dimensions, A-13
    VXIpc-770, A-1
    VXIpc-771, A-4
    VXIpc-871B/872B, A-7
    VXIpc-871B/874B, front panel layout and dimensions, A-14
    VXIpc-872B/875B, front panel layout and dimensions, A-15
    VXIpc-874B/875B, A-10
support, technical, C-1
switch settings (table), 3-2
SYSF LED, 5-15
system clock, 3-5
system CMOS, 3-3
system controller and slot configuration, 3-5
system controller/non-system controller, 2-1
system reset pushbutton, 5-15

T

technical support, C-1
training and certification (NI resources), C-1
trigger
    connector location and pinout (figure), 5-11
    connector signals (table), 5-12
troubleshooting
    CMOS reset, 6-9
    controller does not boot, 6-8
    NI resources, C-1
    power loss during BIOS update, 6-9
    video display, 6-9

U

Universal Serial Bus (USB), 5-1, 5-8
connector location and pinout (figure), 5-9
connector signals (table), 5-9
overview (table), 5-1
Windows NT 4.0 support, 6-1

V

VGA
connector signals (table), 5-3
location and pinout (figure), 5-3
overview (table), 5-1
video, 5-1
See also VGA
changing resolution, 6-9
driver installation, 6-2
VXI
programming for, 4-5
trigger lines, 3-22
VXIbus transfers, optimizing, 4-7
VXI-MXI-2, 3-18
VXIpc 770/870B series
BIOS configuration, 3-9
block diagram, 1-2
connectors, 5-1
COM1 and COM2 connectors and signals, 5-4
GPIB (IEEE 488.2) connector and signals, 5-12
parallel port connector and signals, 5-6
PS/2 connector and signals, 5-9
SCSI connector and signals, 5-13
SMB TRGIN/OUT and EXTCLK, 5-11
Universal Serial Bus (USB) connector and signals, 5-8
VGA connector and signals (table), 5-3
data storage, 5-16
front panel
features, 5-15
system reset pushbutton, 5-15
installing in a VXI chassis, 2-1
(figure), 2-3
installing SO-DIMMs (figure), 2-5
modules, 1-1
National Instruments software, 1-4
peripheral expansion overview (table), 5-1
removing from a VXI chassis, 2-3
software, 1-4
specifications, A-1, A-4
upgrading RAM, 6-6
using external floppy drive with, 6-6
VXI trigger lines, 3-22
VXIpc-770, specifications, A-1
VXIpc-771, specifications, A-4
VXIpc-871B, installed in a VXI chassis (figure), 2-3
VXIpc-871B/872B, specifications, A-7
VXIpc-872B
height of plug-in boards, B-1
I/O expansion boards, modifying and installing, B-1
installing an I/O board, B-2
VXIpc-872B/875B, I/O board dimensions for expansion slot, B-1
VXIpc-874B/875B, specifications, A-10

W

Web resources, C-1
Windows NT 4.0, support for USB and plug and play, 6-1