COMPREHENSIVE SERVICES

We offer competitive repair and calibration services, as well as easily accessible documentation and free downloadable resources.

SELL YOUR SURPLUS

We buy new, used, decommissioned, and surplus parts from every NI series. We work out the best solution to suit your individual needs.

Sell For Cash Get Credit Receive a Trade-In Deal

OBSOLETE NI HARDWARE IN STOCK & READY TO SHIP

We stock **New, New Surplus, Refurbished,** and **Reconditioned** NI Hardware.

APEX WAVES

***Bridging the gap** between the manufacturer and your legacy test system.*

1-800-915-6216

www.apexwaves.com

sales@apexwaves.com

All trademarks, brands, and brand names are the property of their respective owners.

Request a Quote CLICK HERE **cFP-2120**

Quick Start Guide

Compact FieldPoint™ Mounting Accessories for Stand-Alone Controllers

What You Need to Get Set Up

- cFP-21*xx* controller
- Number 2 Phillips screwdriver
- Panel, DIN rail, or desktop mounting accessory kit

Mounting the Controller on the Base

You can mount the cFP-21*xx* on a panel, on 35mm DIN rail, or on a desk or table. Each mounting kit described in this document is shipped with a base which you must fasten to the controller.

NATIONAL INSTRUMENTS™

The following figure shows the proper orientation of the base in relation to the controller.

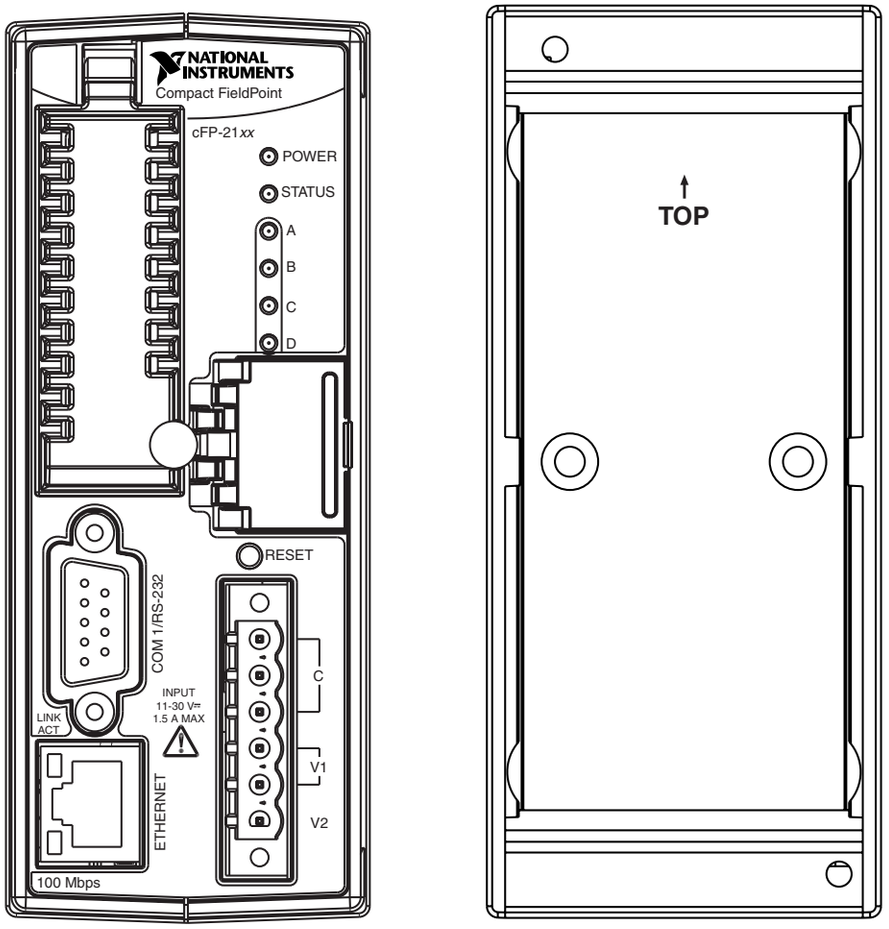

Caution Make sure that power is disconnected from the controller before you mount it on the base.

1. Align the captive screws on the controller with the holes in the base.
2. Using a number 2 Phillips screwdriver with a shank of at least 64 mm (2.5 in.) length, tighten the captive screws to 1.1 N · m (10 lb · in.) of torque.

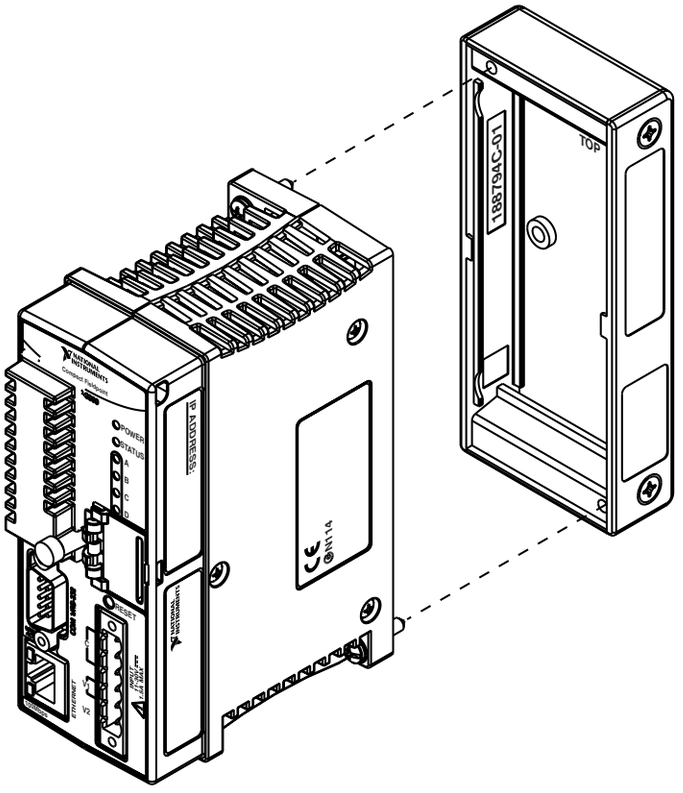

Mounting the Controller on a Panel

1. Fasten the panel-mount plate to the back of the base using a number 2 Phillips screwdriver and the 8-32 × 5/16 in. countersunk screws shipped with the kit.

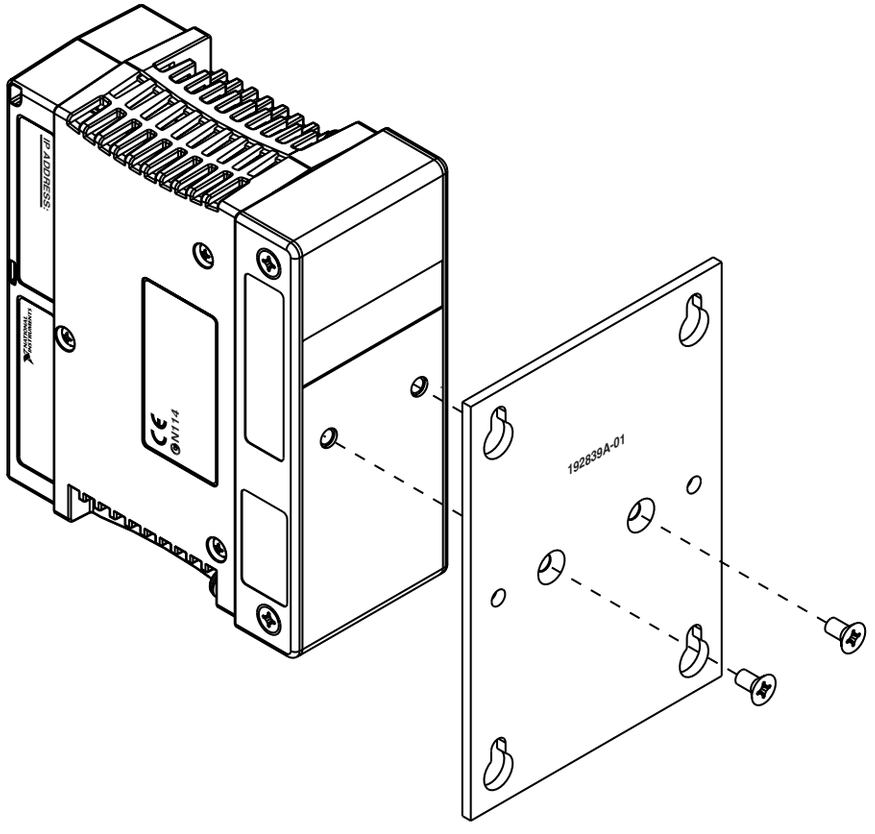

Caution If you substitute other screws for the screws shipped with the kit, do not use screws longer than 5/16 in. to fasten the panel-mount plate to the base.

2. Bolt or screw the panel-mount plate to a panel.

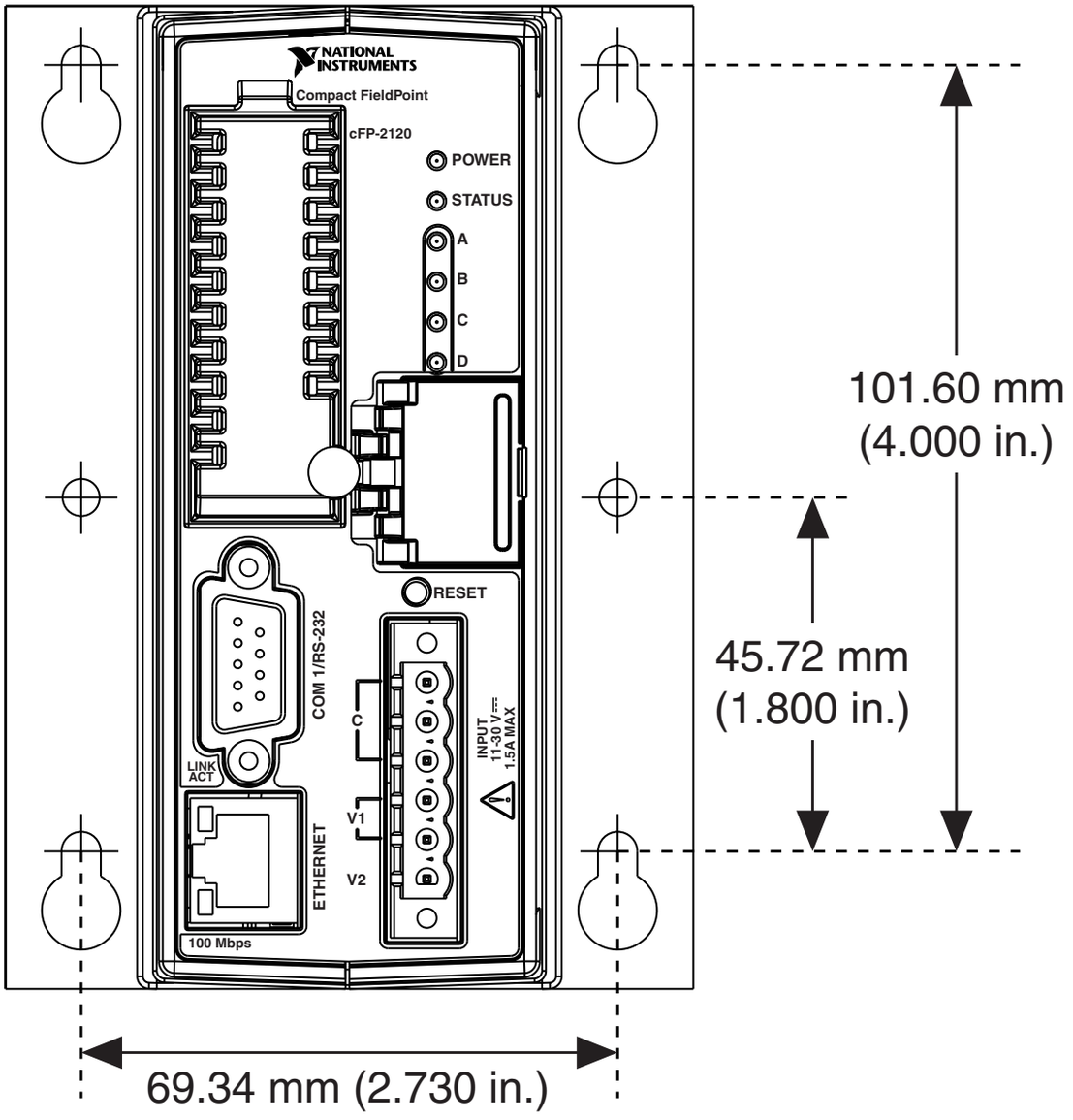

Mounting the Controller on a DIN Rail

1. Fasten the DIN rail clip to the back of the base using a number 2 Phillips screwdriver and the 8-32 × 5/16 in. countersunk screws shipped with the kit.

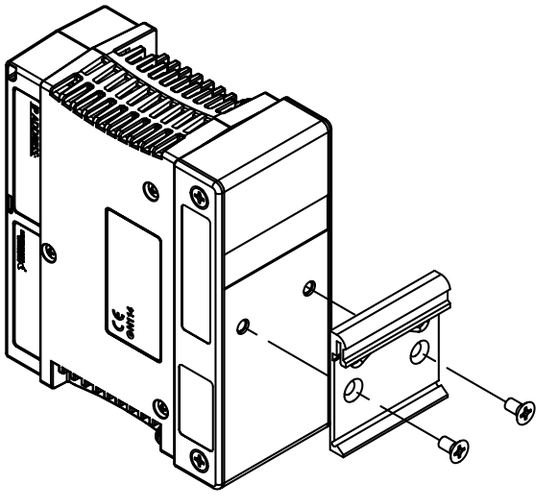

Caution If you substitute other screws for the screws shipped with the kit, do not use screws longer than 5/16 in. to fasten the DIN rail clip to the base.

2. Insert one edge of the DIN rail into the deeper opening of the DIN rail clip.
3. Press down firmly on the controller to compress the spring until the clip locks in place on the DIN rail.

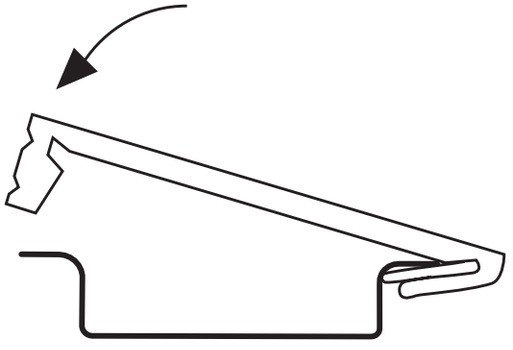

Mounting the Controller on a Desk or Table

1. Fasten the desktop mounting bracket to the back of the base using a number 2 Phillips screwdriver and the 8-32 × 5/16 in. panhead screws shipped with the kit.

Caution If you substitute other screws for the screws shipped with the kit, do not use screws longer than 5/16 in. to fasten the bracket to the base.

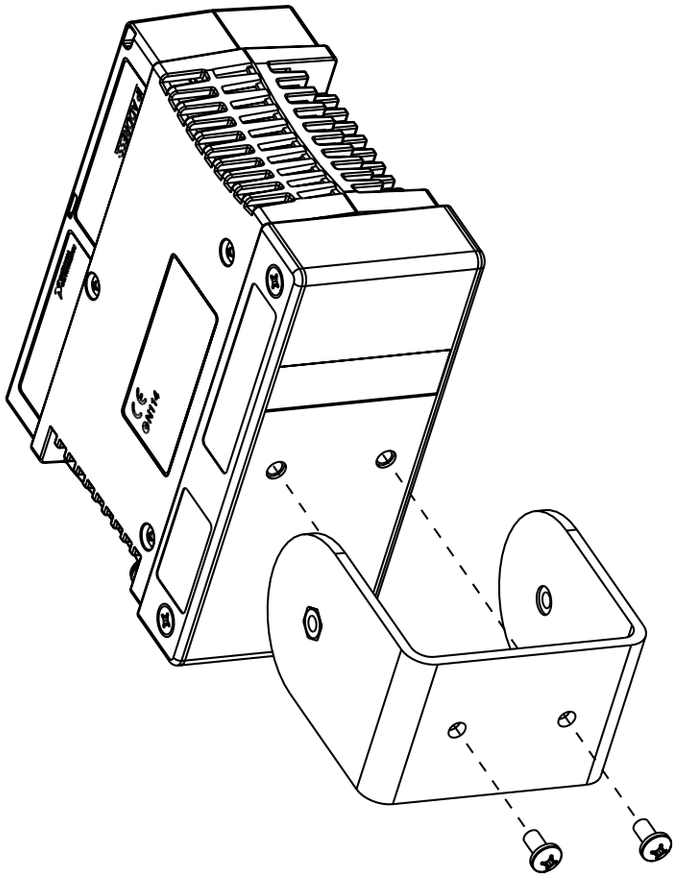

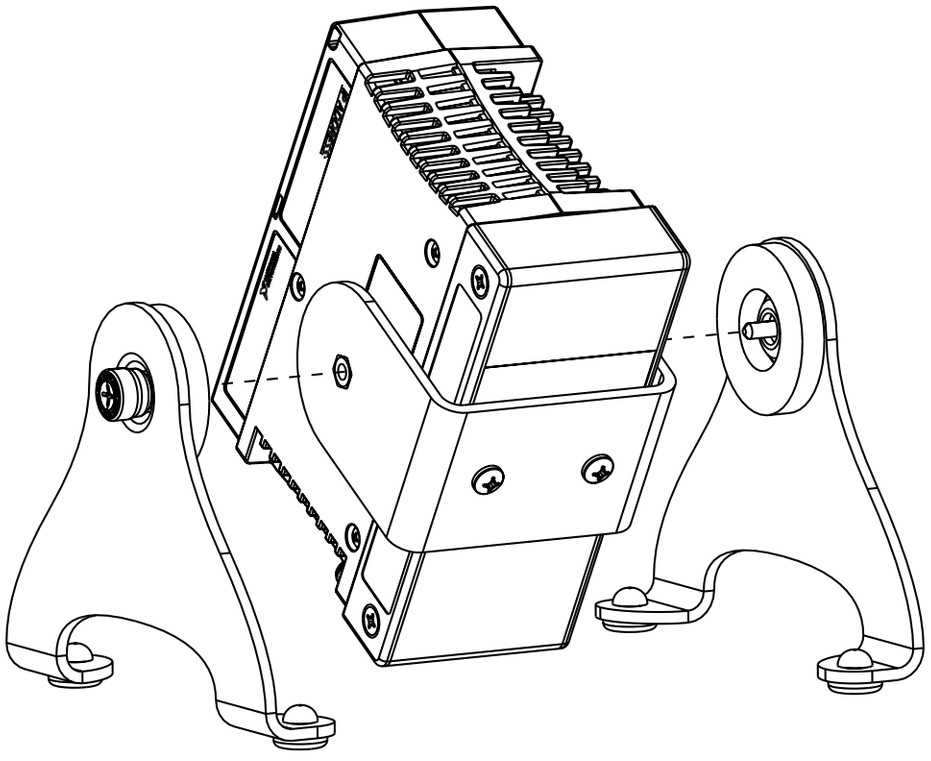

2. Using a number 2 Phillips screwdriver, tighten the captive screws on the two legs into the holes in the bracket.

Where to Go from Here

Refer to the *cFP-21xx Quick Start Guide* and the *Measurement and Automation Explorer Help for FieldPoint* for information about connecting the cFP-21*xx* to your network, wiring power, installing software, and configuring the cFP-21*xx*.

Where to Go for Support

The National Instruments Web site is your complete resource for technical support. At `ni.com/support` you have access to everything from troubleshooting and application development self-help resources to email and phone assistance from NI Application Engineers.

National Instruments corporate headquarters is located at 11500 North Mopac Expressway, Austin, Texas, 78759-3504. National Instruments also has offices located around the world to help address your support needs. For telephone support in the United States, create your service request at `ni.com/support` and follow the calling instructions or dial 512 795 8248. For telephone support outside the United States, contact your local branch office:

Australia 1800 300 800, Austria 43 0 662 45 79 90 0, Belgium 32 0 2 757 00 20,
Brazil 55 11 3262 3599, Canada 800 433 3488, China 86 21 6555 7838,
Czech Republic 420 224 235 774, Denmark 45 45 76 26 00, Finland 385 0 9 725 725 11,
France 33 0 1 48 14 24 24, Germany 49 0 89 741 31 30, India 91 80 51190000,
Israel 972 0 3 6393737, Italy 39 02 413091, Japan 81 3 5472 2970,
Korea 82 02 3451 3400, Lebanon 961 0 1 33 28 28, Malaysia 1800 887710,
Mexico 01 800 010 0793, Netherlands 31 0 348 433 466, New Zealand 0800 553 322,
Norway 47 0 66 90 76 60, Poland 48 22 3390150, Portugal 351 210 311 210,
Russia 7 095 783 68 51, Singapore 1800 226 5886, Slovenia 386 3 425 4200,
South Africa 27 0 11 805 8197, Spain 34 91 640 0085, Sweden 46 0 8 587 895 00,
Switzerland 41 56 200 51 51, Taiwan 886 02 2377 2222, Thailand 662 278 6777,
United Kingdom 44 0 1635 523545

National Instruments, NI, ni.com, and LabVIEW are trademarks of National Instruments Corporation. Refer to the *Terms of Use* section on `ni.com/legal` for more information about National Instruments trademarks. Other product and company names mentioned herein are trademarks or trade names of their respective companies. For patents covering National Instruments products, refer to the appropriate location: **Help»Patents** in your software, the `patents.txt` file on your CD, or `ni.com/patents`.

© 2005 National Instruments Corporation. All rights reserved.

374250A-01 Sep05