COMPREHENSIVE SERVICES

We offer competitive repair and calibration services, as well as easily accessible documentation and free downloadable resources.

SELL YOUR SURPLUS

We buy new, used, decommissioned, and surplus parts from every NI series. We work out the best solution to suit your individual needs.

Sell For Cash Get Credit Receive a Trade-In Deal

OBSOLETE NI HARDWARE IN STOCK & READY TO SHIP

We stock **New, New Surplus, Refurbished,** and **Reconditioned** NI Hardware.

APEX WAVES

Bridging the gap *between the manufacturer and your legacy test system.*

1-800-915-6216

www.apexwaves.com

sales@apexwaves.com

All trademarks, brands, and brand names are the property of their respective owners.

Request a Quote CLICK HERE *NI-9997*

GETTING STARTED GUIDE

NI 9997

2-Channel, 11 A, C Series Busbar Module

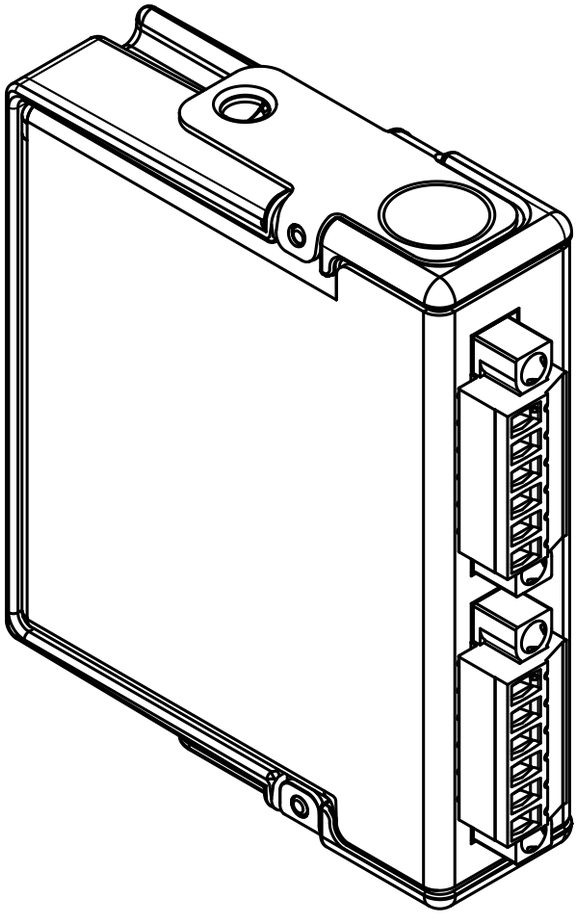

NATIONAL INSTRUMENTS™

This document explains how to connect to the NI 9997.

Note Before you begin, complete the software and hardware installation procedures in your chassis documentation.

Note The guidelines in this document are specific to the NI 9997. The other components in the system might not meet the same safety ratings. Refer to the documentation for each component in the system to determine the safety and EMC ratings for the entire system.

Safety Guidelines

Operate the NI 9997 only as described in this document.

Caution Do not operate the NI 9997 in a manner not specified in this document. Product misuse can result in a hazard. You can compromise the safety protection built into the product if the product is damaged in any way. If the product is damaged, return it to NI for repair.

Hazardous Voltage This icon denotes a warning advising you to take precautions to avoid electrical shock.

Safety Guidelines for Hazardous Voltages

If hazardous voltages are connected to the device, take the following precautions. A hazardous voltage is a voltage greater than 42.4 Vpk voltage or 60 VDC to earth ground.

Caution Ensure that hazardous voltage wiring is performed only by qualified personnel adhering to local electrical standards.

Caution Do not mix hazardous voltage circuits and human-accessible circuits on the same module.

Caution Ensure that devices and circuits connected to the module are properly insulated from human contact.

Caution When module terminals are hazardous voltage LIVE (>42.4 Vpk/60 VDC), you must ensure that devices and circuits connected to the module are properly insulated from human contact. You must use the 6-position connector backshell kit (783804-01)

connector backshell kit to ensure that the terminals are not accessible.

Safety Guidelines for Hazardous Locations

The NI 9997 is suitable for use in Class I, Division 2, Groups A, B, C, D, T4 hazardous locations; Class I, Zone 2, AEx nA IIC T4 and Ex nA IIC T4 hazardous locations; and nonhazardous locations only. Follow these guidelines if you are installing the NI 9997 in a potentially explosive environment. Not following these guidelines may result in serious injury or death.

Caution Do not disconnect I/O-side wires or connectors unless power has been switched off or the area is known to be nonhazardous.

Caution Do not remove modules unless power has been switched off or the area is known to be nonhazardous.

Caution Substitution of components may impair suitability for Class I, Division 2.

Caution For Division 2 and Zone 2 applications, install the system in an enclosure rated to at least IP54 as defined by IEC/EN 60079-15.

Special Conditions for Hazardous Locations Use in Europe and Internationally

The NI 9997 has been evaluated as Ex nA IIC T4 Gc equipment under DEMKO Certificate No. 12 ATEX 1202658X and is IECEx UL 14.0089X certified. Each NI 9997 is marked ⟨Ex⟩ II 3G and is suitable for use in Zone 2 hazardous locations, in ambient temperatures of -40 °C ≤ Ta ≤ 70 °C. If you are using the NI 9997 in Gas Group IIC hazardous locations, you must use the device in an NI chassis that has been evaluated as Ex nC IIC T4, Ex IIC T4, Ex nA IIC T4, or Ex nL IIC T4 equipment.

Caution You must make sure that transient disturbances do not exceed 140% of the rated voltage.

Caution The system shall only be used in an area of not more than Pollution Degree 2, as defined in IEC 60664-1.

Caution The system shall be mounted in an ATEX/IECEx-certified enclosure with a minimum ingress protection rating of at least IP54 as defined in IEC/EN 60079-15.

Caution The enclosure must have a door or cover accessible only by the use of a tool.

Electromagnetic Compatibility Guidelines

This product was tested and complies with the regulatory requirements and limits for electromagnetic compatibility (EMC) stated in the product specifications. These requirements and limits provide reasonable protection against harmful interference when the product is operated in the intended operational electromagnetic environment.

This product is intended for use in industrial locations. However, harmful interference may occur in some installations, when the product is connected to a peripheral device or test object, or if the product is used in residential or commercial areas. To minimize interference with radio and television reception and prevent unacceptable performance degradation, install and use this product in strict accordance with the instructions in the product documentation.

Furthermore, any changes or modifications to the product not expressly approved by National Instruments could void your authority to operate it under your local regulatory rules.

Special Conditions for Marine Applications

Some products are Lloyd's Register (LR) Type Approved for marine (shipboard) applications. To verify Lloyd's Register certification for a product, visit *ni.com/certification* and search for the LR certificate, or look for the Lloyd's Register mark on the product.

Caution In order to meet the EMC requirements for marine applications, install the product in a shielded enclosure with shielded and/or filtered power and input/output ports. In addition, take precautions when designing, selecting, and installing measurement probes and cables to ensure that the desired EMC performance is attained.

Preparing the Environment

Ensure that the environment in which you are using the NI 9997 meets the following specifications.

Operating temperature (IEC 60068-2-1, IEC 60068-2-2)	-40 °C to 70 °C
Operating humidity (IEC 60068-2-78)	10% RH to 90% RH, noncondensing
Pollution Degree	2
Maximum altitude	3,000 m

Indoor use only.

Note Refer to the device datasheet on *ni.com/manuals* for complete specifications.

NI 9997 Pinout

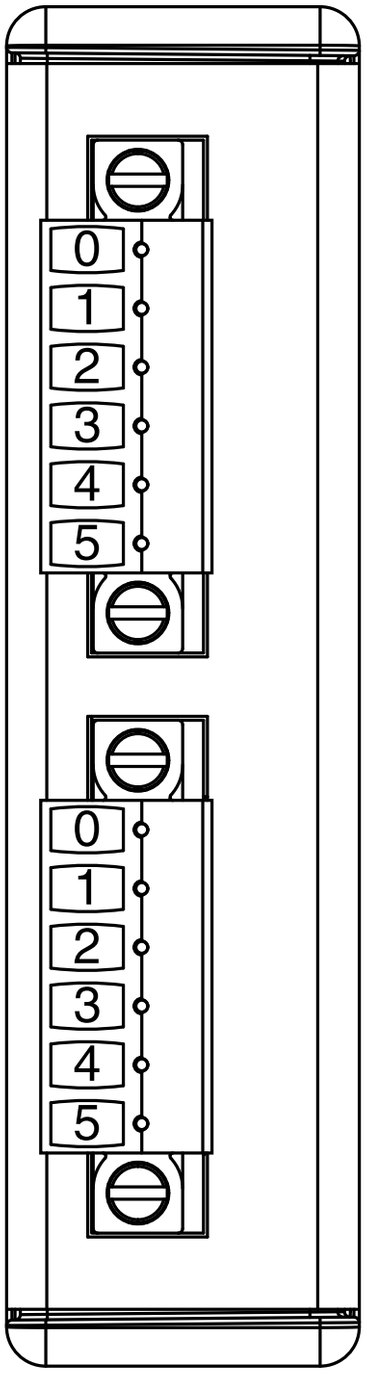

Channel 0

Channel 1

High-Vibration Application Connections

If your application is subject to high vibration, NI recommends that you follow these guidelines to protect connections to the NI 9997:

- Use ferrules to terminate wires to the detachable connector.
- Use the 6-position connector backshell kit (783804-01).

Busbar Configurations

The following sections illustrate typical busbar configurations.

Connecting Multiple Shields/Common Pins to Ground

The NI 9997 simplifies wiring multiple shields to ground.

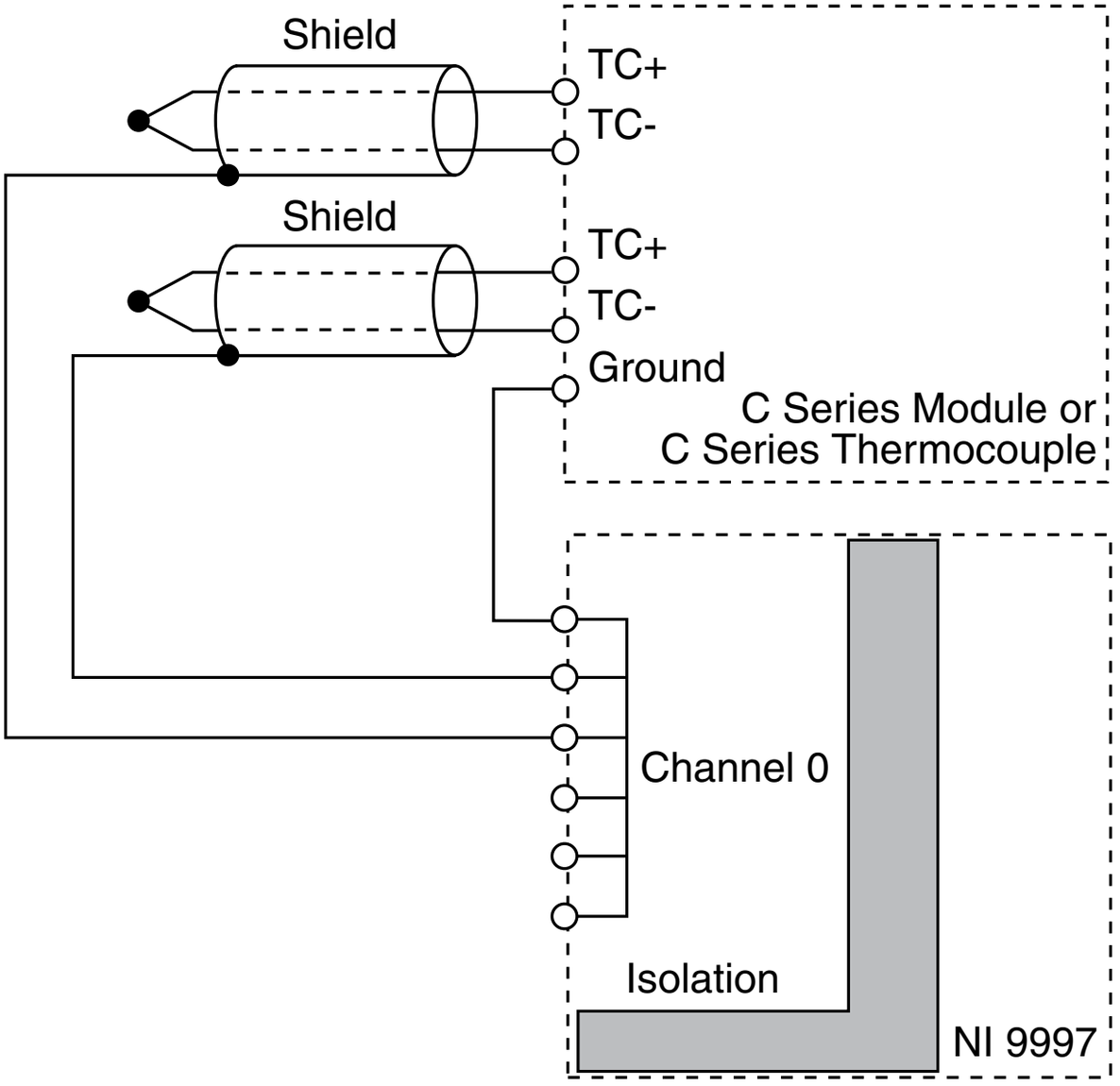

- Attach the ground of the separate C Series module to a terminal on a channel of the NI 9997.
- Connect the shields to the remaining terminals on the channel.

Connecting Multiple Modules to Device Common

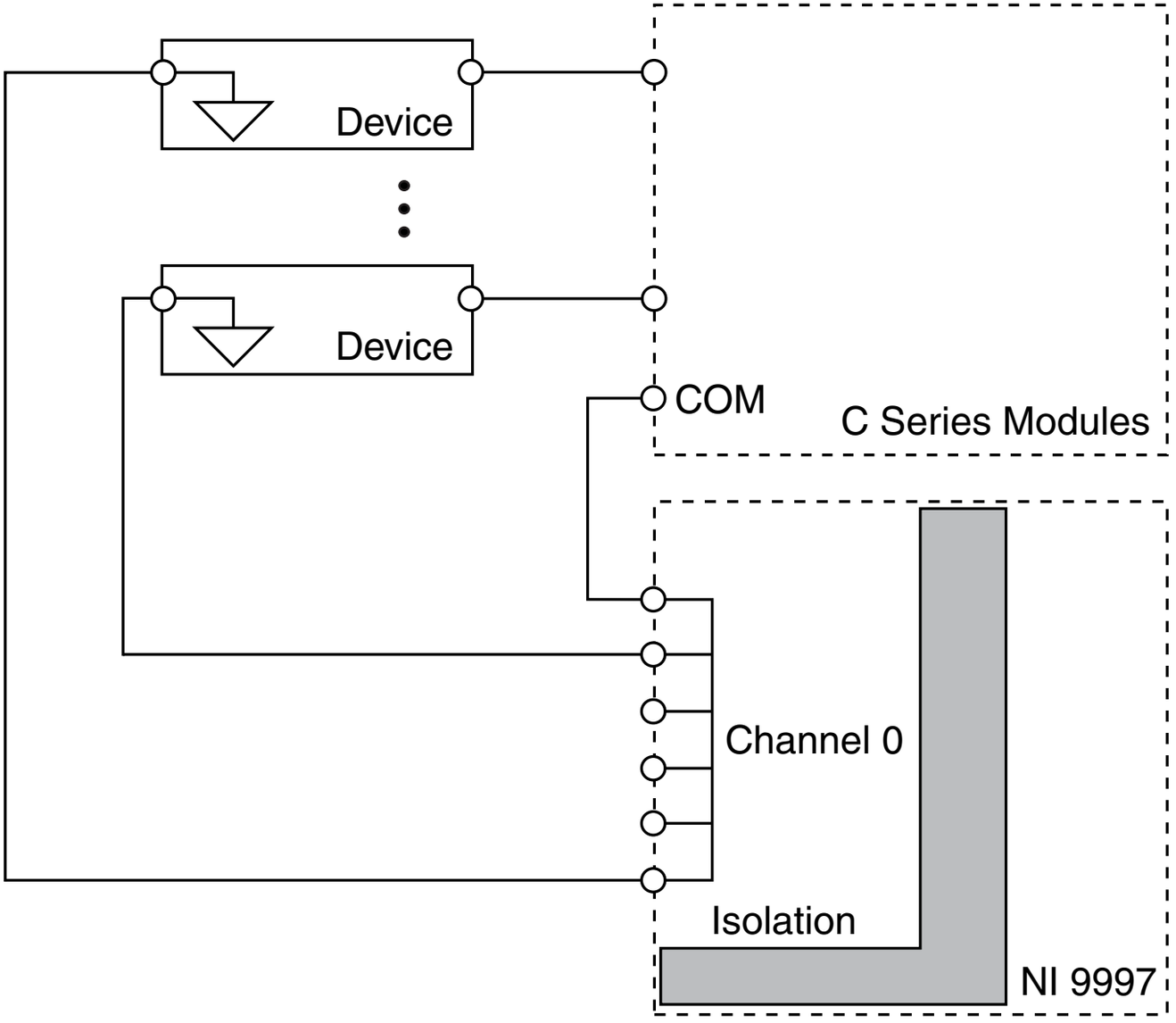

- Attach the C Series Modules COM to a terminal of the NI 9997 channel.
- Connect the common connection of the device(s) to the remaining terminals on the channel.

Connecting Multiple Devices to One External Power Supply

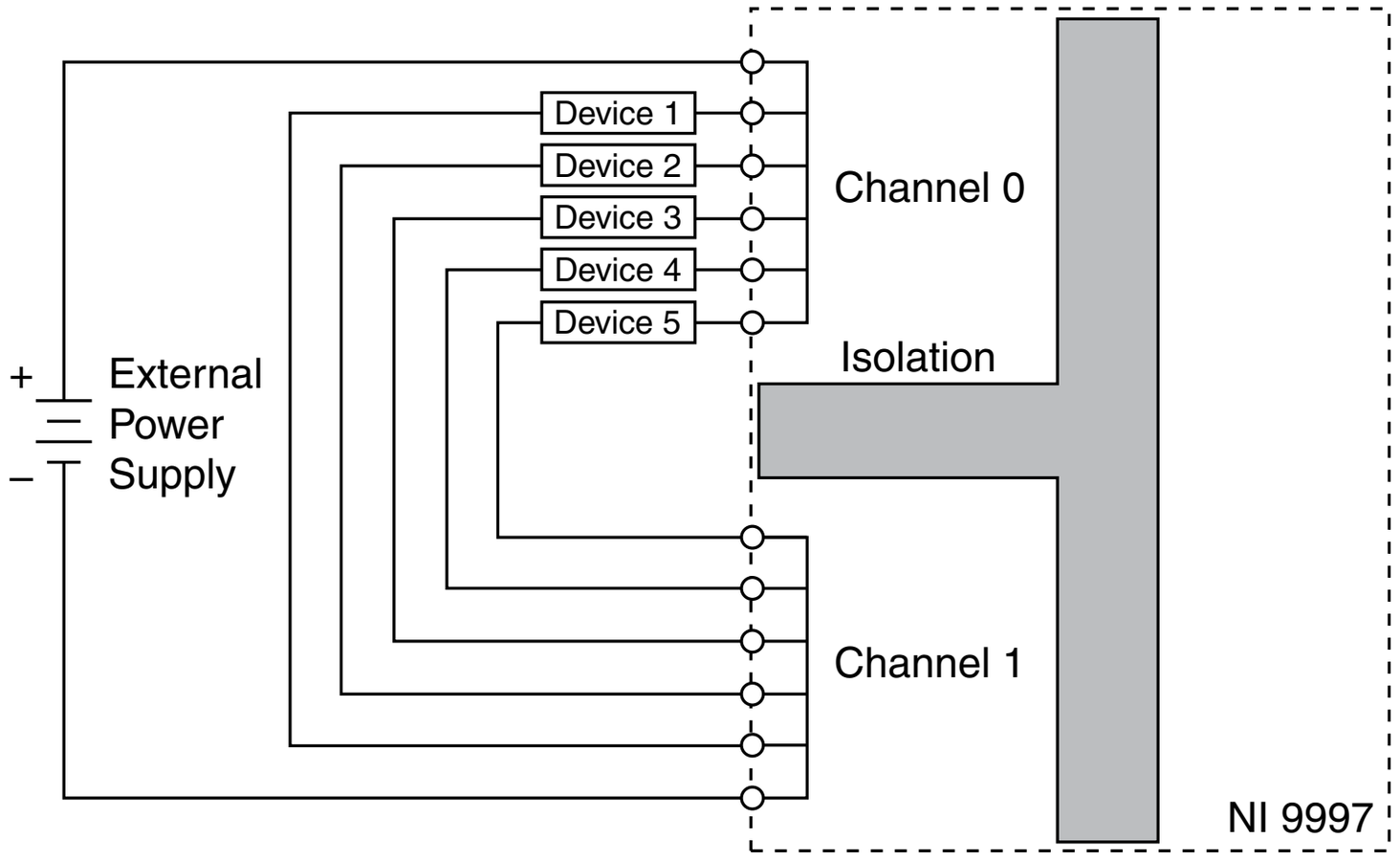

- Connect the positive line of the PS to Channel 0 on the NI 9997.
- Connect the negative line of the PS to Channel 1 on the NI 9997.
- Connect the positive line of the device(s) to Channel 0 on the NI 9997.
- Connect the negative line of the device(s) to Channel 1 on the NI 9997.

NI 9997 Specifications

The following specifications are typical for the range -40 °C to 70 °C unless otherwise noted.

Caution Do not operate the NI 9997 in a manner not specified in this document. Product misuse can result in a hazard. You can compromise the safety protection built into the product if the product is damaged in any way. If the product is damaged, return it to NI for repair.

Physical Characteristics

Number of channels	2 isolated, 6 terminal channels
Current per channel	11 A, maximum
Screw-terminal wiring	
Gauge	0.05 mm^2 to 1.5 mm^2 (30 AWG to 14 AWG) copper conductor wire
Wire strip length	6 mm (0.24 in.) of insulation stripped from the end
Temperature rating	90 °C minimum
Torque for screw terminals	0.22 N · m to 0.25 N · m (1.95 lb · in. to 2.21 lb · in.)
Wires per screw terminal	One wire per screw terminal; two wires per screw terminal using a 2-wire ferrule

Connector securement	
Securement type	Screw flanges provided
Torque for screw flanges	0.2 N · m (1.80 lb · in.)
Ferrules	
Single wire	0.25 mm^2 to 1.50 mm^2 (24 AWG to 16 AWG)
Double wire	0.823 mm^2 (18 AWG) maximum
Weight	137 g (4.8 oz)

Safety Voltages

Maximum Voltage	
Channel-to-earth ground	
Continuous	300 Vrms, Measurement Category II
Isolation Voltages	
Channel-to-channel	
Continuous	300 Vrms, Measurement Category II
Withstand	3,000 Vrms, verified by a 5 s dielectric withstand test
Channel-to-earth ground	
Continuous	300 Vrms, Measurement Category II
Withstand	3,000 Vrms, verified by a 5 s dielectric withstand test

Measurement Category II is for measurements performed on circuits directly connected to the electrical distribution system.

This category refers to local-level electrical distribution, such as that provided by a standard wall outlet, for example, 115 V for U.S. or 230 V for Europe.

Caution Do not connect the NI 9997 to signals or use for measurements within Measurement Categories III or IV.

Hazardous Locations

U.S. (UL)	Class I, Division 2, Groups A, B, C, D, T4; Class I, Zone 2, AEx nA IIC T4
Canada (C-UL)	Class I, Division 2, Groups A, B, C, D, T4; Class I, Zone 2, Ex nA IIC T4
Europe (ATEX) and International (IECEx)	Ex nA IIC T4 Gc

Safety and Hazardous Locations Standards

This product is designed to meet the requirements of the following electrical equipment safety standards for measurement, control, and laboratory use:

- IEC 61010-1, EN 61010-1
- UL 61010-1, CSA 61010-1
- EN 60079-0:2012, EN 60079-15:2010
- IEC 60079-0: Ed 6, IEC 60079-15; Ed 4
- UL 60079-0; Ed 5, UL 60079-15; Ed 3
- CSA 60079-0:2011, CSA 60079-15:2012

Note For UL and other safety certifications, refer to the product label or the *Online Product Certification* section.

CE Compliance CE

This product meets the essential requirements of applicable European Directives, as follows:

- 2014/35/EU; Low-Voltage Directive (safety)
- 2014/30/EU; Electromagnetic Compatibility Directive (EMC)
- 94/9/EC; Potentially Explosive Atmospheres (ATEX)

Online Product Certification

Refer to the product Declaration of Conformity (DoC) for additional regulatory compliance information. To obtain product certifications and the DoC for this product, visit *ni.com/certification*, search by model number or product line, and click the appropriate link in the Certification column.

Shock and Vibration

To meet these specifications, you must panel mount the system.

Operating vibration	
Random (IEC 60068-2-64)	5 g_{rms}, 10 Hz to 500 Hz
Sinusoidal (IEC 60068-2-6)	5 g, 10 Hz to 500 Hz
Operating shock (IEC 60068-2-27)	30 g, 11 ms half sine; 50 g, 3 ms half sine; 18 shocks at 6 orientations

Environmental

Refer to the manual for the chassis you are using for more information about meeting these specifications.

Operating temperature (IEC 60068-2-1, IEC 60068-2-2)	-40 °C to 70 °C
Storage temperature (IEC 60068-2-1, IEC 60068-2-2)	-40 °C to 85 °C

Ingress protection	IP40
Operating humidity (IEC 60068-2-78)	10% RH to 90% RH, noncondensing
Storage humidity (IEC 60068-2-78)	5% RH to 95% RH, noncondensing
Pollution Degree	2
Maximum altitude	3,000 m

Indoor use only.

Environmental Management

NI is committed to designing and manufacturing products in an environmentally responsible manner. NI recognizes that eliminating certain hazardous substances from our products is beneficial to the environment and to NI customers.

For additional environmental information, refer to the *Minimize Our Environmental Impact* web page at *ni.com/environment*. This page contains the environmental regulations and directives with which NI complies, as well as other environmental information not included in this document.

Waste Electrical and Electronic Equipment (WEEE)

EU Customers At the end of the product life cycle, all NI products must be disposed of according to local laws and regulations. For more information about how to recycle NI products in your region, visit *ni.com/environment/weee*.

电子信息产品污染控制管理办法（中国 RoHS）

中国客户 National Instruments 符合中国电子信息产品中限制使用某些有害物质指令(RoHS)。关于 National Instruments 中国 RoHS 合规性信息，请登录 ni.com/environment/rohs_china。(For information about China RoHS compliance, go to ni.com/environment/rohs_china.)

Worldwide Support and Services

The NI website is your complete resource for technical support. At *ni.com/support*, you have access to everything from

troubleshooting and application development self-help resources to email and phone assistance from NI Application Engineers.

Visit *ni.com/services* for NI Factory Installation Services, repairs, extended warranty, and other services.

Visit *ni.com/register* to register your NI product. Product registration facilitates technical support and ensures that you receive important information updates from NI.

A Declaration of Conformity (DoC) is our claim of compliance with the Council of the European Communities using the manufacturer's declaration of conformity. This system affords the user protection for electromagnetic compatibility (EMC) and product safety. You can obtain the DoC for your product by visiting *ni.com/certification*. If your product supports calibration, you can obtain the calibration certificate for your product at *ni.com/calibration*.

NI corporate headquarters is located at
11500 North Mopac Expressway, Austin, Texas, 78759-3504. NI also has offices located around the world. For telephone support in the United States, create your service request at *ni.com/support* or dial 1 866 ASK MYNI (275 6964). For telephone support outside the United States, visit the *Worldwide Offices* section of

ni.com/niglobal to access the branch office websites, which provide up-to-date contact information, support phone numbers, email addresses, and current events.

Refer to the *NI Trademarks and Logo Guidelines* at ni.com/trademarks for information on NI trademarks. Other product and company names mentioned herein are trademarks or trade names of their respective companies. For patents covering NI products/technology, refer to the appropriate location: **Help**»**Patents** in your software, the patents.txt file on your media, or the *National Instruments Patent Notice* at ni.com/patents. You can find information about end-user license agreements (EULAs) and third-party legal notices in the readme file for your NI product. Refer to the *Export Compliance Information* at ni.com/legal/export-compliance for the NI global trade compliance policy and how to obtain relevant HTS codes, ECCNs, and other import/export data. NI MAKES NO EXPRESS OR IMPLIED WARRANTIES AS TO THE ACCURACY OF THE INFORMATION CONTAINED HEREIN AND SHALL NOT BE LIABLE FOR ANY ERRORS. U.S. Government Customers: The data contained in this manual was developed at private expense and is subject to the applicable limited rights and restricted data rights as set forth in FAR 52.227-14, DFAR 252.227-7014, and DFAR 252.227-7015.

© 2014—2017 National Instruments. All rights reserved.

376997D-01 November 13, 2017