COMPREHENSIVE SERVICES

We offer competitive repair and calibration services, as well as easily accessible documentation and free downloadable resources.

SELL YOUR SURPLUS

We buy new, used, decommissioned, and surplus parts from every NI series. We work out the best solution to suit your individual needs.

- Sell For Cash
- Get Credit
- Receive a Trade-In Deal

OBSOLETE NI HARDWARE IN STOCK & READY TO SHIP

We stock **New, New Surplus, Refurbished,** and **Reconditioned** NI Hardware.

APEX WAVES

Bridging the gap *between the manufacturer and your legacy test system.*

1-800-915-6216

www.apexwaves.com

sales@apexwaves.com

All trademarks, brands, and brand names are the property of their respective owners.

Request a Quote CLICK HERE ***PCI-GPIB Plus***

INSTALLATION GUIDE AND SPECIFICATIONS

GPIB Hardware

Contents

Electromagnetic Compatibility Guidelines 1
GPIB-USB Interfaces 2
    LED Signaling 4
PCIe-GPIB, PCIe-GPIB+, PCI-GPIB, PCI-GPIB+, PCI-GPIB/LP, and PCI-8232 5
ExpressCard-GPIB 7
PMC-GPIB 8
PXI-GPIB and PXI-8232 10
GPIB-ENET/1000 12
    GPIB-ENET/1000 Installation 12
    Baseplate Identification Label 13
    Startup 13
    Ethernet Connector LEDs 14
    Software Recognition 14
    Ethernet Configuration 15
    Firmware Update 17
    READY LED Signaling 17
    CFG RESET Switch 18
Specifications 19
    ExpressCard-GPIB 19
    GPIB-ENET/1000 20
    GPIB-USB-HS 21
    GPIB-USB-HS+ 22
    PCI-8232 23
    PCIe-GPIB and PCIe-GPIB+ 25
    PCI-GPIB 26
    PCI-GPIB+ 27
    PMC-GPIB 28
    PXI-8232 29
    PXI-GPIB 30
    All Devices 32
Worldwide Support and Services 34

Electromagnetic Compatibility Guidelines

This hardware has been tested and found to comply with the applicable regulatory requirements and limits for electromagnetic compatibility (EMC) as indicated in the hardware's Declaration of Conformity (DoC)[1]. These requirements and limits are designed to provide reasonable

protection against harmful interference when the hardware is operated in the intended electromagnetic environment. In special cases, for example when either highly sensitive or noisy hardware is being used in close proximity, additional mitigation measures may have to be employed to minimize the potential for electromagnetic interference.

While this hardware is compliant with the applicable regulatory EMC requirements, there is no guarantee that interference will not occur in a particular installation. To minimize the potential for the hardware to cause interference to radio and television reception or to experience unacceptable performance degradation, install and use this hardware in strict accordance with the instructions in the hardware documentation and the DoC[1].

If this hardware does cause interference with licensed radio communications services or other nearby electronics, which can be determined by turning the hardware off and on, you are encouraged to try to correct the interference by one or more of the following measures:

- Reorient the antenna of the receiver (the device suffering interference).
- Relocate the transmitter (the device generating interference) with respect to the receiver.
- Plug the transmitter into a different outlet so that the transmitter and the receiver are on different branch circuits.

Some hardware may require the use of a metal, shielded enclosure (windowless version) to meet the EMC requirements for special EMC environments such as, for marine use or in heavy industrial areas. Refer to the hardware's user documentation and the DoC[1] for product installation requirements.

When the hardware is connected to a test object or to test leads, the system may become more sensitive to disturbances or may cause interference in the local electromagnetic environment.

Operation of this hardware in a residential area is likely to cause harmful interference. Users are required to correct the interference at their own expense or cease operation of the hardware.

Changes or modifications not expressly approved by National Instruments could void the user's right to operate the hardware under the local regulatory rules.

GPIB-USB Interfaces

Caution Ground loops create an electric shock hazard and can cause damage to your GPIB-USB hardware, your computer, and other system components. A ground loop can occur when your computer and one or more connected instruments do not share the same ground potential.

[1] The Declaration of Conformity (DoC) contains important EMC compliance information and instructions for the user or installer. To obtain the DoC for this product, visit `ni.com/certification`, search by model number or product line, and click the appropriate link in the Certification column.

To prevent damage to your GPIB-USB hardware and other system components, do any of the following:

- Ensure that your system and all instruments connected to it share the same ground potential. This eliminates the possibility of voltage differential running through your system.
- Use a GPIB-120B Bus Isolator/Expander to isolate GPIB systems and expand the GPIB interface up to 28 devices.
- Use a pair of GPIB-140A High-Speed Fiber-Optic Bus Extenders. This transforms the GPIB signals at each end into fiber optic signals, allowing each unit to reside at a different ground potential.
- Use an isolated USB hub.

Complete the following steps to install your interface:

1. Connect the USB connector from the GPIB-USB interface to an available USB Type A port on your computer.
2. Before connecting the GPIB-USB interface to GPIB devices, ensure that the computer and the GPIB devices are at the same ground potential. The GPIB-USB interface connects directly to most GPIB devices without requiring a GPIB cable.
3. If your computer is already running, the operating system automatically detects the GPIB interface. Otherwise, the GPIB interface is detected when you start your computer.

Figure 1. Installing the GPIB-USB Interface

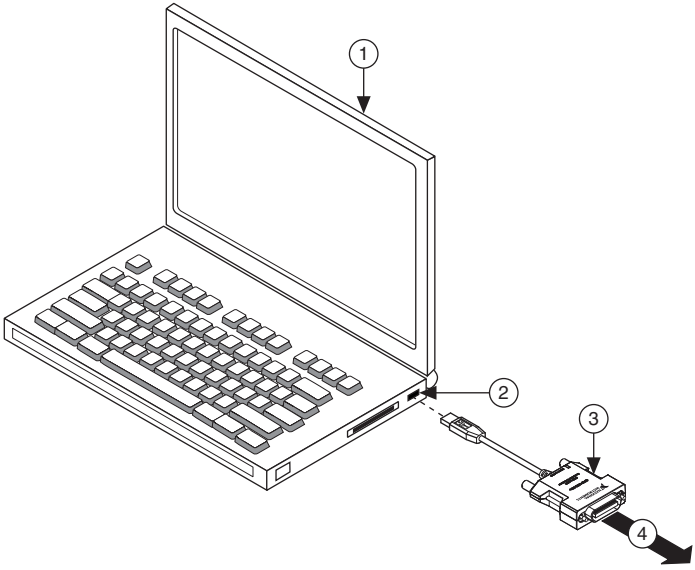

1	Computer	2	USB Connector	3	GPIB-USB Interface	4	To GPIB Devices

The GPIB hardware installation is now complete.

LED Signaling

The GPIB-USB-HS controller uses two LEDs to indicate status and activity.

When you connect the GPIB-USB-HS controller, the **READY** LED lights either green or amber once the driver is installed and detected. Table 1 summarizes the functionality of the LEDs on the GPIB-USB-HS hardware.

Table 1. GPIB-USB-HS LED Descriptions

LED	Description
READY	Green indicates that the GPIB-USB-HS is plugged into a USB full-speed (USB 1.1) port. Amber indicates that the GPIB-USB-HS is plugged into a USB Hi-Speed (USB 2.0) port.
ACTIVE	Indicates activity on the GPIB bus.

The GPIB-USB-HS+ controller uses a multicolored LED to indicate status and activity. Table 2 summarizes the functionality of the LEDs on the GPIB-USB-HS+ hardware.

Table 2. GPIB-USB-HS+ LED Descriptions

LED	Description
Alternating Amber/Green	The GPIB-USB-HS+ is not ready to use. You must install (or re-install) the NI-488.2 driver before using the GPIB-USB-HS+. **Note**: Windows 8 and later suspend power to a USB device that does not have a driver attached. If the LED does not light, try reinstalling the NI-488.2 driver.
Steady Green	Indicates that the GPIB-USB-HS+ is plugged into a USB full-speed (USB 1.1) port.
Steady Amber	Indicates that the GPIB-USB-HS+ is plugged into a USB Hi-Speed (USB 2.0) port.
Blinking Amber or Green	Indicates activity on the GPIB bus or that the GPIB Analyzer is capturing.

PCIe-GPIB, PCIe-GPIB+, PCI-GPIB, PCI-GPIB+, PCI-GPIB/LP, and PCI-8232

Caution Electrostatic discharge can damage several components on your GPIB board. To avoid such damage in handling your board, touch the antistatic plastic package to a metal part of your computer chassis before removing the board from the package.

Complete the following steps to install your interface:

1. Make sure that your computer is powered off. Keep the computer plugged in so that it remains grounded while you install the GPIB hardware.
2. Remove the top cover (or other access panels) to gain access to the computer expansion slots.
3. Find an unused expansion slot in your computer. Your PCI board can be plugged into either a 3.3 V or 5 V, 32- or 64-bit PCI slot. Your PCI Express card can be plugged into a x1, x4, x8, or x16 PCI Express slot.
4. Remove the corresponding slot cover on the back panel of the computer.
5. Insert the GPIB board into the slot with the GPIB connector sticking out of the opening on the back panel, as shown in Figure 2. It might be a tight fit, but do not force the board into place.

Note Your PCI Express board may be larger than the one shown in the figure.

Figure 2. Installing Your PCI/PCI Express Board

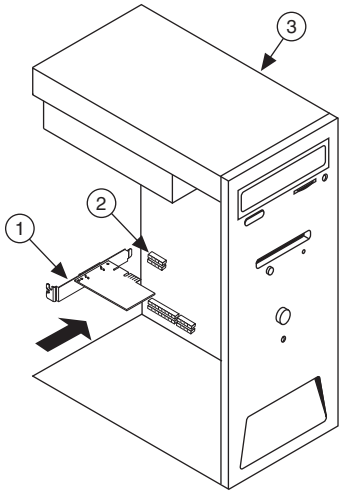

1	PCI Express Board	3	Computer
2	PCI Express Slot		

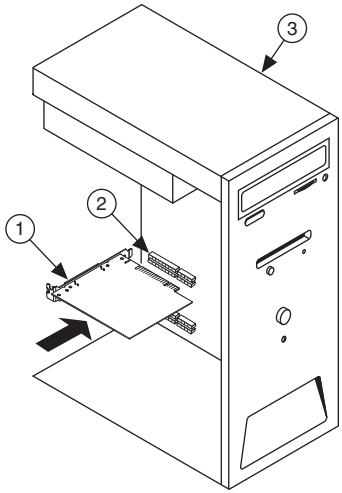

1	PCI Board	3	Computer
2	PCI Slot		

6. Screw the mounting bracket of the GPIB board to the back panel rail of the computer.
7. Replace the top cover (or the access panel to the expansion slot).
8. Power on your computer.

The GPIB hardware installation is now complete.

ExpressCard-GPIB

Caution Ground loops create an electric shock hazard and can cause damage to your ExpressCard-GPIB hardware, your computer, and other system components. A ground loop can occur when your computer and one or more connected instruments do not share the same ground potential.

To prevent damage to your ExpressCard-GPIB hardware and other system components, do any of the following:

- Ensure that your system and all instruments connected to it share the same ground potential. This eliminates the possibility of voltage differential running through your system.
- Use a GPIB-120B Bus Isolator/Expander to isolate GPIB systems and expand the GPIB interface up to 28 devices.
- Use a pair of GPIB-140A High-Speed Fiber-Optic Bus Extenders. This transforms the GPIB signals at each end into fiber optic signals, allowing each unit to reside at a different ground potential.

Complete the following steps to install the ExpressCard-GPIB interface:

1. Plug the card into an available ExpressCard™ slot on your computer.
2. Before connecting the ExpressCard-GPIB interface to GPIB devices, ensure that the computer and the GPIB devices are at the same ground potential.
3. If your computer is already running, the operating system automatically detects the GPIB interface. Otherwise, the GPIB interface is detected when you start your computer.

Figure 3 shows how to insert the ExpressCard-GPIB and connect the cable.

Figure 3. Inserting the ExpressCard-GPIB

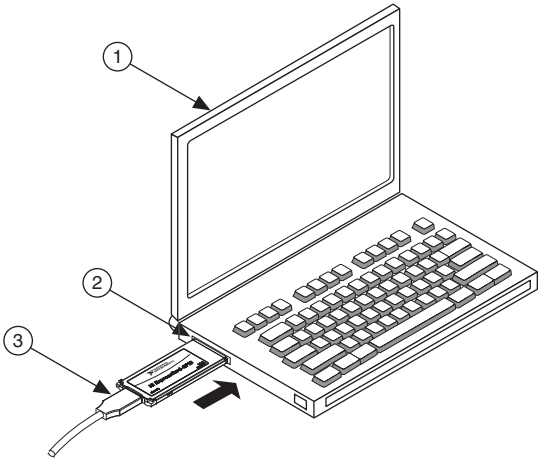

1	Notebook Computer	2	ExpressCard Slot	3	ExpressCard-GPIB Cable

The GPIB hardware installation is now complete.

PMC-GPIB

Caution Electrostatic discharge can damage several components on your GPIB board. To avoid electrostatic damage when you handle the board, touch the antistatic plastic package to a metal part of your system chassis before removing the board from the package.

Complete the following steps to install your PMC-GPIB:

1. Power off your system.
2. Find an unused PMC slot in your system. You may need to remove the host from the system to access the PMC slot.
3. Remove the corresponding slot filler panel from the host.

4. Insert the PMC-GPIB into the slot as shown in Figure 4. It might be a tight fit, but do not force the board into place.

Figure 4. Installing the PMC-GPIB

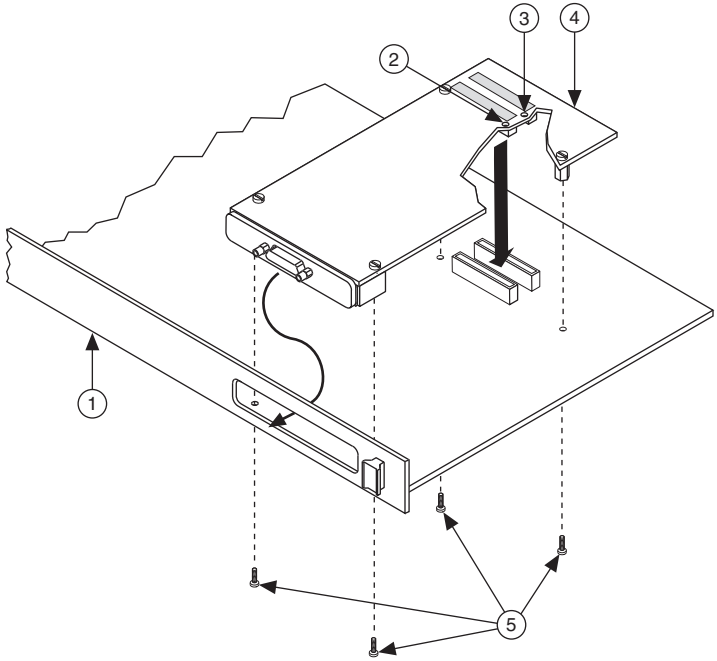

1	Host Face Plate	3	5 V Keying Hole	5	Mounting Screws
2	3.3 V Keying Hole	4	PMC-GPIB Board		

5. Use the mounting hardware provided to fasten the PMC-GPIB to the host.
6. Reinstall the host, if you removed it to install the PMC-GPIB.
7. Power on your system.

The PMC-GPIB hardware installation is now complete.

PXI-GPIB and PXI-8232

Caution Electrostatic discharge can damage several components on your GPIB board. To avoid electrostatic damage when you handle the board, touch the antistatic plastic package to a metal part of your system chassis before removing the board from the package.

Complete the following steps to install your PXI card:

1. Make sure that your PXI or CompactPCI chassis is powered off. Keep the PXI or CompactPCI chassis plugged in so that it remains grounded while you install your PXI card.
2. Choose an unused PXI or CompactPCI 5 V peripheral slot. For maximum performance, your PXI card has an onboard DMA controller that can only be used if the board is installed in a slot that supports bus arbitration, or bus master cards. National Instruments recommends installing your PXI card in such a slot. If you install the board in a non-master slot, you must disable your PXI card's onboard DMA controller using the board-level call `ibdma`. Refer to the *NI-488.2 Help* for a complete description of `ibdma`.
3. Remove the filler panel for the peripheral slot you have chosen.
4. Touch a metal part on your chassis to discharge any static electricity that might be on your clothes or body.

5. Insert your PXI card into the selected 5 V slot. Use the injector/ejector handle to fully inject the device into place. Figure 5 shows how to install your PXI card into a PXI or CompactPCI chassis.

Figure 5. Installing Your PXI Card

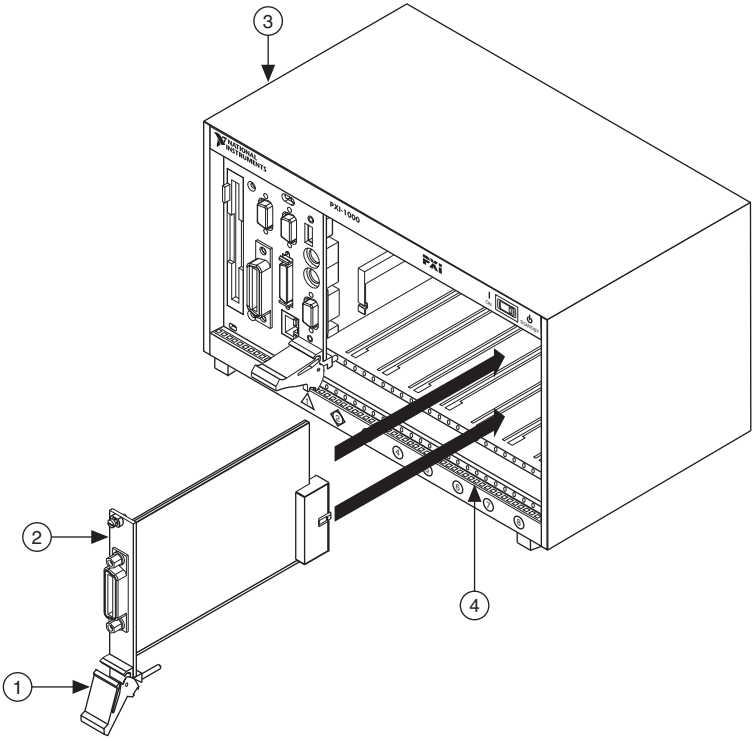

1	Injector/Ejector Handle (In Down Position)	3	PXI Chassis
2	Your PXI Card	4	Injector/Ejector Rail

6. Screw the front panel of the PXI card to the front panel mounting rail of the PXI or CompactPCI chassis.
7. Power on your PXI or CompactPCI chassis.

The PXI card installation is now complete.

GPIB-ENET/1000 Installation

Complete the following steps and refer to Figure 6 to install the GPIB-ENET/1000:

1. Connect one end of your shielded Ethernet cable to your GPIB-ENET/1000. Connect the other end of the shielded Ethernet cable to your Ethernet network.
2. Connect one end of the power cord to the power supply. Screw the power connector on the other end of the power supply onto the power jack of the GPIB-ENET/1000.
3. Plug the other end of the power cord into an AC outlet.

Figure 6. Installing the GPIB-ENET/1000

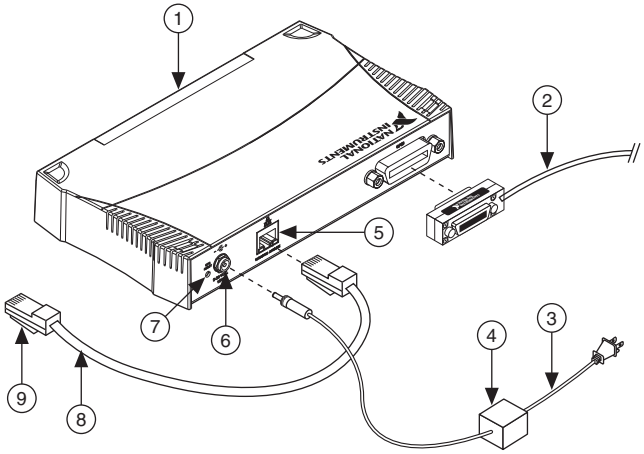

1	Front Panel LEDs	4	Power Supply	7	Configuration Reset Switch
2	GPIB Cable	5	Ethernet Connector	8	Shielded Ethernet Cable
3	Power Cord	6	Power Connector	9	To Ethernet Network

4. Refer to the *Baseplate Identification Label* on the base of the GPIB-ENET/1000 and make a note of the serial number, MAC address (Ethernet address), and default hostname. You will need this information when you run some of the utilities.
5. Contact your network administrator to determine whether your network supports DHCP or if you need to manually perform the Ethernet configuration to set up the network parameters. If your network uses DHCP, the network configuration is performed automatically at startup. If your network does not use DHCP, Auto IP (link-local) addressing is used to acquire an initial IP address. A steady green **READY** LED indicates the GPIB-ENET/1000 finished its boot process and acquired its IP address. The unit is now ready to operate. You may need to run software configuration and verification utilities at this time.
6. Connect the GPIB cable to the GPIB-ENET/1000. Connect the other end to your GPIB instrument.

Baseplate Identification Label

When you configure the GPIB-ENET/1000 for use on your network, you will need to differentiate it from other network devices. Every GPIB-ENET/1000 has a unique serial number, Ethernet address, and default hostname. You can find this information on the baseplate identification label on the GPIB-ENET/1000.

Note The Ethernet address is not the IP address. All devices on an Ethernet network are assigned a unique physical address—the Ethernet address, also known as the MAC address—so they can communicate with each other.

Figure 7. GPIB-ENET/1000 Baseplate Identification Label

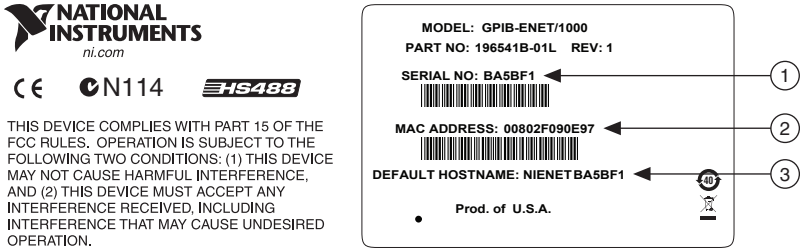

1	Serial Number	2	MAC Address (Ethernet Address)	3	Default Hostname

Startup

Turn on the front-panel power switch. The **POWER** LED lights steady green. The **READY** LED blinks green rapidly while the GPIB-ENET/1000 completes its boot process and attempts to acquire its network parameters.

By default, the GPIB-ENET/1000 attempts its network configuration automatically through DHCP. If there is no DHCP response, the GPIB-ENET/1000 reverts to Auto IP addressing and assigns itself an IP address in the range of `169.254.x.x`. Refer to *Auto IP Addressing* for more information. The time required for assigning the IP address depends on your network and the configuration of your GPIB-ENET/1000. Allow up to 30 seconds and observe the state of the **READY** LED to determine the outcome of the boot process. One of the following should occur:

- A steady green **READY** LED indicates the GPIB-ENET/1000 finished the boot process and acquired its IP address. The unit is now ready to operate. When using DHCP, the GPIB-ENET/1000 typically is ready to operate about 15 seconds after you power it on.
- If the **READY** LED blinks a slow red pattern, the GPIB-ENET/1000 boot process failed. Refer to *READY LED Signaling* to interpret the flash pattern before calling National Instruments Technical Support.
- A steady red **READY** LED indicates that the GPIB-ENET/1000 has corrupt firmware and has entered Safe Mode. The only operation allowed in Safe Mode is to update the firmware. Refer to the *Firmware Update* section for instructions on how to update the firmware.

Table 3 summarizes the functionality of all the front-panel LEDs on the GPIB-ENET/1000.

Table 3. GPIB-ENET/1000 LED Descriptions

LED	Description
POWER	Indicates the power cord is connected and the GPIB-ENET/1000 is switched on.
READY	Flashes green rapidly at startup while booting and acquiring network parameters. A steady green state indicates the unit is ready for operation. A steady red or slow red blinking pattern indicates an error occurred.
TALK	Indicates the GPIB-ENET/1000 is configured as a GPIB Talker.
LISTEN	Indicates the GPIB-ENET/1000 is configured as a GPIB Listener.
ACT/LINK	Indicates the GPIB-ENET/1000 detected an Ethernet link and blinks to indicate network activity.

Ethernet Connector LEDs

The Ethernet connector LEDs on the back panel, shown in Figure 8, indicate your Ethernet connection status.

Figure 8. Ethernet Connector LEDs

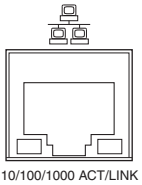

The **10/100/1000** LED indicates your Ethernet connection speed.

- **Yellow**—Indicates your network connection is 1000 Mbit/s.
- **Green**—Indicates your network connection is 100 Mbit/s.
- **Off**—Indicates your network connection is 10 Mbit/s, or the Ethernet is not connected if the **ACT/LINK** LED also is off.

The **ACT/LINK** LED indicates network activity.

- **Steady green**—Indicates you have a network link, but no network activity is detected.
- **Blinking green**—Indicates you have a network link and network activity is detected.
- **Off**—Indicates you do not have a network link.

Software Recognition

In Windows, use the GPIB Ethernet Wizard to add the GPIB-ENET/1000 to your system. Launch the GPIB Ethernet Wizard from **Start»Programs»National Instruments»NI-488.2**.

(Windows 8) Click **NI Launcher** and select GPIB Ethernet Wizard. Accept the GPIB-ENET/1000 default configuration settings or change them while running the wizard.

On Mac and Linux, use the Add GPIB Hardware Wizard to add the GPIB-ENET/1000 to your system. Click **New** to launch the Add GPIB Hardware Wizard from the GPIB Explorer utility in the installed `NI-488.2` or `ni4882` directory. Once the GPIB-ENET/1000 is recognized, you can change the configuration settings as described in the *Ethernet Configuration* section. Refer to the installation guide on the media for more details about the GPIB Ethernet Wizard, Add GPIB Hardware Wizard, and GPIB Explorer utility.

Ethernet Configuration

The GPIB-ENET/1000 uses a Web page for device configuration. If your network uses DHCP, the network configuration is performed automatically at startup, and you should not need the GPIB-ENET/1000 Configuration Web page unless you need to modify the hostname or update the firmware.

In addition to manually configuring the network parameters, you can use the GPIB-ENET/1000 Configuration Web page for any of the following purposes:

- Enable DHCP/Auto IP addressing
- Verify or change the hostname
- Add or change a comment to help identify the device
- Change the administrator password
- Update firmware

Once the GPIB-ENET/1000 has been added to your system, you may need to remove it and add it again if you modify the configuration of a GPIB-ENET/1000.

Using the GPIB-ENET/1000 Configuration Web Page

You can access the GPIB-ENET/1000 Configuration Web page in most browsers. Enter the IP address or hostname into the browser's address bar. Anyone can view the current configuration at any time. However, changes to the configuration or firmware updates proceed only after you enter the proper password.

Changing the Network Settings

Complete the following steps to change the network settings:

1. Navigate to the GPIB-ENET/1000 Configuration Web page using a browser.

   The current hostname is displayed. The hostname associates a name with a numerical IP address. **Hostname** is a required field.

   The GPIB-ENET/1000 attempts to use the hostname when registering with DHCP. Many DHCP servers have the ability to register the hostname and the assigned IP address. You then can reliably use the hostname to communicate with your GPIB-ENET/1000 even if the numerical IP address changes.

   Some DHCP servers do not implement hostname registration. The GPIB-ENET/1000 requires Domain Name Server (DNS) registration when using DHCP. If your DHCP server

does not support DNS registration, you must use an Auto IP address or static network parameters.

2. Choose whether you need to use DHCP with Auto IP fallback or a static IP configuration.
   - Leaving the checkbox unchecked enables DHCP with Auto IP fallback. You do not need to enter any network parameters unless you want to change the Ethernet device hostname.
   - To use static IP configuration, check the **Static IP Configuration** checkbox. Enter the *Static IP Parameters* you have chosen for the host IP Address, Subnet Mask, Default Gateway, Primary DNS Server, and Secondary DNS Server.
3. You can enter an optional comment to help you identify each device.
4. When your configuration is complete, save the configuration to the GPIB-ENET/1000. You must supply the correct administrator password prior to the settings being saved.

The GPIB-ENET/1000 applies the setting changes immediately. There is no need to reboot the interface.

Auto IP Addressing

Auto IP addressing, also referred to as link-local addressing, allows a network device to obtain its network identity automatically and advertise its presence without other network servers being required, such as DHCP and DNS. An Auto IP address is in the form of `169.254.x.x`. This type of addressing is useful for connecting the GPIB-ENET/1000 directly to a Windows PC.

To determine the Auto IP address the GPIB-ENET/1000 is using, you need to discover the interface using Measurement & Automation Explorer or the GPIB Ethernet Wizard. In addition to an automatically assigned IP address, Auto IP also consists of a "local name" responder. You should be able to access the GPIB-ENET/1000 using the hostname followed by `.local`, such as `nienetba5bf1.local`.

Static IP Parameters

If DHCP is not available and you do not want to use Auto IP, you must provide the GPIB-ENET/1000 with several important network parameters.

- **IP address**—The unique, computer-readable address of a device on your network. An IP address typically is represented as four decimal numbers separated by periods (for example, `130.164.54.215`). Refer to the *Choosing a Static IP Address* section.
- **Subnet Mask**—A bit mask that helps the network device determine whether another device is on the same network or a different network.
- **Default Gateway**—The IP address of a device that acts as a gateway, which is a connection between two networks. If your network does not have a gateway, set this parameter to `0.0.0.0`.
- **Primary DNS Server/Secondary DNS Server**—The IP address of a network device that stores hostnames and translates them into IP addresses. If your network does not have a DNS server, leave these parameters blank.

Choosing a Static IP Address

For a Network Administered by a Network Administrator

If you are adding the GPIB-ENET/1000 to an existing Ethernet network, you must choose IP addresses carefully. Contact your network administrator to obtain an appropriate static IP address for your GPIB-ENET/1000. Also have the network administrator assign the proper subnet mask, gateway, and DNS server addresses.

For a Network without a Network Administrator

If you are assembling your own small Ethernet network, you can choose your own IP addresses. The format of the IP addresses is determined by the subnet mask. You should use the same subnet mask as the computer you are using with your GPIB-ENET/1000. If your subnet mask is `255.255.255.0`, the first three numbers in every IP address on the network must be the same. If your subnet mask is `255.255.0.0`, only the first two numbers in the IP addresses on the network must match.

For either subnet mask, numbers between 1 and 254 are valid choices for the last number of the IP address. Numbers between 0 and 255 are valid for the third number of the IP address, but this number must be the same as other devices on your network if your subnet mask is `255.255.255.0`.

If you are setting up your own network, you probably do not have a gateway or DNS server. If this is the case, you should set the default gateway to `0.0.0.0` and leave the two DNS server parameters blank.

Firmware Update

The GPIB-ENET/1000 software includes a firmware update feature you can use to access new features that may be added to the GPIB-ENET/1000 in the future. You must update the firmware to take advantage of any new features. You can obtain the latest upgrade by navigating to `ni.com/info` in a Web browser and entering Info Code `GPIBENET1000FW`.

Caution Do *not* power-off the GPIB-ENET/1000 or disconnect the power supply while updating the firmware. Doing so could damage the unit. The GPIB-ENET/1000 reboots automatically when the update completes.

You can update the firmware from the GPIB-ENET/1000 Web Configuration page. To access the GPIB-ENET/1000 Web Configuration page, enter the IP address or hostname into the browser address bar. In the **Details** section of the web page, click **Update** under the **Firmware** heading.

READY LED Signaling

The **READY** LED blinks red slowly in a distinct pattern to alert you of internal errors. Use this section to interpret and record the pattern that the **READY** LED flashes, and then contact National Instruments.

Note By recording the **READY** LED status messages before calling National Instruments, you can save yourself time, and the Product Support Department can answer your questions more accurately and efficiently. Do not switch off power to your GPIB-ENET/1000 before recording the blinking **READY** LED pattern.

READY LED signaling can report up to 81 different errors. The errors are numbered from 11 to 99 and are reported through sequences of **READY** LED flashes.

Note There is no zero in any error message. This means that error message numbers 0 to 10, 20, 30, 40, 50, 60, 70, 80, and 90 are not possible.

Step 1. Count the Long Flashes

A three-second interval, during which the **READY** LED is off, separates each repetition of the sequence. The sequence begins with a series of long one-second flashes—that is, one second red, one second off. These long flashes represent the digit in the tens column. There can be one to nine long flashes, which represent digits 1 through 9. For example, one long flash represents the digit 1 in the tens column, and nine long flashes represent the digit 9 in the tens column.

Step 2. Count the Short Flashes

The long flashes are followed by shorter flashes; each short flash lasts about one-fifth of a second—that is, one-fifth of a second red, one-fifth of a second off. These short flashes represent the digit in the ones column. Again, there can be one to nine flashes, which represent the digits 1 through 9. For example, one short flash represents the digit 1 in the ones column, and nine short flashes represent the digit 9 in the ones column.

Using this method, the **READY** LED flashes the following sequence to represent status message 11:

<three seconds off> <one long red flash> <one short red flash>
<three seconds off>…

The **READY** LED flashes the following sequence to represent status message 31:

<three seconds off> <three long red flashes> <one short red flash> <three seconds off>…

Step 3. Record Your Status Code Number

When you have computed your error message number, write it down and also note the ON/OFF state of the **ACT/LINK** LED. Have this information available when calling National Instruments.

CFG RESET Switch

The Configuration Reset (**CFG RESET**) switch is a recessed switch located beside the power connector on the rear panel.

You can use this switch at power on to reset the unit to its factory settings. By pressing and holding the **CFG RESET** switch while you power on the GPIB-ENET/1000, all settings revert to the factory settings as follows:

- DHCP with Auto IP fallback.
- Default hostname as printed on the baseplate label.
- Administrator password is `pass`.

You must press and hold the switch until the **READY** LED blinks yellow. If you release the switch prior to the **READY** LED blinks yellow, no change occurs to the network configuration, and the GPIB-ENET/1000 continues to boot normally.

Once the **READY** LED blinks yellow, release the **CFG RESET** switch. The GPIB-ENET/1000 resets to its default network characteristics and resumes the boot process. The **READY** LED indicates the boot process progress, as described in Table 3.

Specifications

ExpressCard-GPIB

Performance

GPIB	
3-wire	up to 1830 kbytes/s
HS488	up to 7230 kbytes/s

Power Requirements

Device is powered by ExpressCard USB interface	
+3.3 V	140 mA, Typical 500 mA, Maximum

Physical Characteristics

Dimensions	3.4 cm × 7.5 cm × 0.5 cm (1.34 in. × 2.95 in. × 0.2 in.)
Connector	
GPIB	26-position latching connector with cable to IEEE 488 24-pin connector included in shipping kit
ExpressCard	ExpressCard/34 standard connector interface

Environment

Operating ambient temperature	0 °C to 65 °C (Tested in accordance with IEC 60068-2-1 and IEC 60068-2-2.)
Operating relative humidity	5% to 95%, noncondensing (Tested in accordance with IEC 60068-2-56.)
Storage ambient temperature	-20 °C to 65 °C (Tested in accordance with IEC 60068-2-1 and IEC 60068-2-2.)
Nonoperating thermal shock	-20 °C to 65 °C, 5 shocks

Shock and Vibration

Nonoperating shock	50 g, 11 ms (Tested in accordance with IEC 60068-2-27.)
Nonoperating vibration, sinusoidal	15 g, 100 Hz to 2,000 Hz (Tested in accordance with IEC 60068-2-6.)
Nonoperating drop test	2 drops in 3 mutually exclusive axes from 75 cm onto no-cushioning vinyl tile surface

GPIB-ENET/1000

Performance

GPIB	
3-wire	up to 1480 kbytes/s
HS488	up to 5600 kbytes/s

Power Requirements

+9–30 VDC	250 mA @ +12 V, Typical 500 mA @ +12 V, Maximum

Physical Characteristics

Dimensions	21.0 cm × 12.7 cm × 3.7 cm (8.3 in. × 5.0 in. × 1.4 in.)
Weight	394 g (13.9 oz)

Connector	
GPIB	IEEE 488 standard 24 pin
Ethernet	RJ-45 with integrated LEDs

Environment

Operating ambient temperature	0 °C to 55 °C (Tested in accordance with IEC 60068-2-1 and IEC 60068-2-2.)
Operating relative humidity	10% to 90%, noncondensing (Tested in accordance with IEC 60068-2-56.)
Storage ambient temperature	-40 °C to 70 °C (Tested in accordance with IEC 60068-2-1 and IEC 60068-2-2.)
Storage relative humidity	5% to 95%, noncondensing (Tested in accordance with IEC 60068-2-56.)

Shock and Vibration

Operating shock	30 g peak, half-sine, 11 ms pulse (Tested in accordance with IEC 60068-2-27; test profile developed in accordance with MIL-PRF-28800F.)
Random vibration	
Operating	5 Hz to 500 Hz, 0.3 g_{rms}
Nonoperating	5 Hz to 500 Hz, 2.4 g_{rms} (Tested in accordance with IEC 60068-2-64. Nonoperating test profile exceeds the requirements of MIL-PRF-28800F, Class 3.)

GPIB-USB-HS

Performance

GPIB	
3-wire	up to 1830 kbytes/s
HS488	up to 7230 kbytes/s

Power Requirements

USB bus-powered device	
+5 V (VBUS)	140 mA, Typical 500 mA, Maximum

Physical Characteristics

Dimensions	10.7 cm × 6.6 cm × 2.6 cm (4.2 in. × 2.6 in. × 1.0 in.)
Weight	180 g (6.3 oz), includes USB cable weight
Connector	
GPIB	IEEE 488 24-pin connector
USB	USB standard Type A plug
Jackscrew	
Thread	M3.5 × 0.6
Torque	0.56 N · m (5.0 lb · in.), maximum

Environment

Operating ambient temperature	0 °C to 55 °C (Tested in accordance with IEC 60068-2-1 and IEC 60068-2-2.)
Operating relative humidity	10% to 90%, noncondensing (Tested in accordance with IEC 60068-2-56.)
Storage ambient temperature	-20 °C to 70 °C (Tested in accordance with IEC 60068-2-1 and IEC 60068-2-2.)
Storage relative humidity	5% to 95%, noncondensing (Tested in accordance with IEC 60068-2-56.)

GPIB-USB-HS+

Performance

GPIB	
3-wire	up to 1830 kbytes/s
HS488	up to 7920 kbytes/s

Power Requirements

USB bus-powered device	
+5 V (VBUS)	80 mA, Typical 500 mA, Maximum

Physical Characteristics

Dimensions	8.0 cm × 6.1 cm × 2.0 cm (3.2 in. × 2.4 in. × 0.8 in.)
Weight	153 g (5.4 oz), includes USB cable weight
Connector	
GPIB	IEEE 488 24-pin connector
USB	USB standard Type A plug
Jackscrew	
Thread	M3.5 × 0.6
Torque	0.56 N · m (5.0 lb · in.), maximum

Environment

Operating ambient temperature	0 °C to 55 °C (Tested in accordance with IEC 60068-2-1 and IEC 60068-2-2.)
Operating relative humidity	10% to 90%, noncondensing (Tested in accordance with IEC 60068-2-56.)
Storage ambient temperature	-20 °C to 70 °C (Tested in accordance with IEC 60068-2-1 and IEC 60068-2-2.)
Storage relative humidity	5% to 95%, noncondensing (Tested in accordance with IEC 60068-2-56.)

PCI-8232

Performance

GPIB	
3-wire	up to 1830 kbytes/s
HS488	up to 7920 kbytes/s

Ethernet interface	
10Base-T	up to 10 Mbit/s
100Base-TX	up to 100 Mbit/s
1000Base-T	up to 1000 Mbit/s

Power Requirements

+5 V	917 mA, Typical 1500 mA, Maximum

Physical Characteristics

Dimensions	12.90 cm × 10.65 cm (5.08 in. × 4.19 in.)
Weight	102 g (3.6 oz)
Connector	
GPIB	IEEE 488 24-pin connector
Ethernet	RJ-45 with integrated LEDs

Environment

Operating ambient temperature	0 °C to 55 °C (Tested in accordance with IEC 60068-2-1 and IEC 60068-2-2.)
Operating relative humidity	10% to 90%, noncondensing (Tested in accordance with IEC 60068-2-56.)
Storage ambient temperature	-20 °C to 70 °C (Tested in accordance with IEC 60068-2-1 and IEC 60068-2-2.)
Storage relative humidity	5% to 95%, noncondensing (Tested in accordance with IEC 60068-2-56.)

PCIe-GPIB and PCIe-GPIB+

Performance

GPIB	
3-wire	up to 1670 kbytes/s
HS488	up to 7980 kbytes/s

Power Requirements[1]

PCIe-GPIB (+3.3 V)	320 mA, Typical 500 mA, Maximum
PCIe-GPIB+ (+3.3 V)	360 mA, Typical 560 mA, Maximum

Physical Characteristics[1]

Dimensions	9.754 cm × 6.888 cm (3.840 in. × 2.712 in.)
Connector	
GPIB	IEEE 488 24-pin connector
PCIe	x1

Environment[1]

Operating ambient temperature	0 °C to 55 °C (Tested in accordance with IEC 60068-2-1 and IEC 60068-2-2.)
Operating relative humidity	10% to 90%, noncondensing (Tested in accordance with IEC 60068-2-56.)
Storage ambient temperature	-20 °C to 70 °C (Tested in accordance with IEC 60068-2-1 and IEC 60068-2-2.)
Storage relative humidity	5% to 95%, noncondensing (Tested in accordance with IEC 60068-2-56.)

[1] A version of the PCIe-GPIB controller (part number 190243x-01, manufactured prior to 2008) differs from these specifications in power consumption, physical dimensions, and ambient temperature range. For specific details, refer to the *Notice of Board Change—PCIe-GPIB* on ni.com.

PCI-GPIB

Performance

GPIB	
3-wire	up to 1536 kbytes/s
HS488	up to 7885 kbytes/s

Power Requirements

PCI-GPIB/TNT4882C[1]	
+3.3 V	121 mA, Typical 182 mA, Maximum
+5 V	300 mA, Typical 450 mA, Maximum
PCI-GPIB/TNT5004[2]	
+5 V	150 mA, Maximum
VIO	5 mA, Maximum
PCI-GPIB/LP (Low Profile)[3]	
+5 V	300 mA, Typical 450 mA, Maximum

Physical Characteristics

Dimensions	
PCI-GPIB/TNT4882C	13.3 cm × 10.7 cm (5.25 in. × 4.20 in.)
PCI-GPIB/TNT5004	12 cm × 6.44 cm (4.72 in. × 2.54 in.)
PCI-GPIB/LP	12 cm × 6.44 cm (4.87 in. × 2.54 in.)

[1] PCI-GPIB boards manufactured before 2003 use the TNT4882C controller. The assembly number printed on these boards is 183617x-01.

[2] A later revision of PCI-GPIB boards uses the TNT5004 controller. The assembly number printed on these boards is 188513x-01.

[3] PCI-GPIB/LP is a low profile PCI-GPIB board designed to fit in low-profile machines. It uses a special cable to convert between the micro-DSub connector of the board and the GPIB connector.

Connector	
GPIB	IEEE 488 24-pin connector (The PCI-GPIB/LP uses a special cable to convert between the Micro D-Sub connector of the board and the GPIB connector.)
PCI	Universal

Environment

Operating ambient temperature	0 °C to 55 °C (Tested in accordance with IEC 60068-2-1 and IEC 60068-2-2.)
Operating relative humidity	10% to 90%, noncondensing (Tested in accordance with IEC 60068-2-56.)
Storage ambient temperature	-20 °C to 70 °C (Tested in accordance with IEC 60068-2-1 and IEC 60068-2-2.)
Storage relative humidity	5% to 95%, noncondensing (Tested in accordance with IEC 60068-2-56.)

PCI-GPIB+

Performance

GPIB	
3-wire	up to 1577 kbytes/s
HS488	up to 8182 kbytes/s

Power Requirements

3.3 V	170 mA, Typical 575 mA, Maximum

Physical Characteristics

Dimensions	10.67 cm × 11.99 cm (4.2 in. × 4.7 in.)
Connector	
GPIB	IEEE 488 24-pin connector
PCI	Universal

Environment

Operating ambient temperature	0 °C to 55 °C (Tested in accordance with IEC 60068-2-1 and IEC 60068-2-2.)
Operating relative humidity	10% to 90%, noncondensing (Tested in accordance with IEC 60068-2-56.)
Storage ambient temperature	-20 °C to 70 °C (Tested in accordance with IEC 60068-2-1 and IEC 60068-2-2.)
Storage relative humidity	5% to 95%, noncondensing (Tested in accordance with IEC 60068-2-56.)

PMC-GPIB

Performance

GPIB	
3-wire	up to 1536 kbytes/s
HS488	up to 7885 kbytes/s

Power Requirements

+5 V	100 mA, Typical 129 mA, Maximum
VIO	3 mA, Typical 10 mA, Maximum

Physical Characteristics

Dimensions	7.4 cm × 14.9 cm (2.9 in. × 5.9 in.)
Connector	
GPIB	Micro D-Sub 25-pin connector
PMC	32-bit, Universal Signaling

Environment

Operating ambient temperature	0 °C to 55 °C (Tested in accordance with IEC 60068-2-1 and IEC 60068-2-2.)
Operating relative humidity	10% to 90%, noncondensing (Tested in accordance with IEC 60068-2-56.)
Storage ambient temperature	-20 °C to 70 °C (Tested in accordance with IEC 60068-2-1 and IEC 60068-2-2.)
Storage relative humidity	5% to 95%, noncondensing (Tested in accordance with IEC 60068-2-56.)

PXI-8232

Performance

GPIB	
3-wire	up to 1536 kbytes/s
HS488	up to 7885 kbytes/s
Ethernet interface	
10Base-T	up to 10 Mbit/s
100Base-TX	up to 100 Mbit/s
1000Base-T	up to 1000 Mbit/s

Power Requirements

+5 V	917 mA, Typical 1500 mA, Maximum

Physical Characteristics

Dimensions	10.0 cm × 16.0 cm (3.9 in. × 6.3 in.), 3U
Connector	
GPIB	IEEE 488 24-pin connector
Ethernet	RJ-45 with integrated LEDs

Environment

Operating ambient temperature	0 °C to 55 °C (Tested in accordance with IEC 60068-2-1 and IEC 60068-2-2.)
Operating relative humidity	10% to 90%, noncondensing (Tested in accordance with IEC 60068-2-56.)
Storage ambient temperature	-40 °C to 70 °C (Tested in accordance with IEC 60068-2-1 and IEC 60068-2-2.)
Storage relative humidity	5% to 95%, noncondensing (Tested in accordance with IEC 60068-2-56.)

Shock and Vibration

Operating shock	30 g peak, half-sine, 11 ms pulse (Tested in accordance with IEC 60068-2-27; test profile developed in accordance with MIL-PRF-28800F.)
Random vibration	
Operating	5 Hz to 500 Hz, 0.31 g_{rms}
Nonoperating	5 Hz to 500 Hz, 2.46 g_{rms} (Tested in accordance with IEC 60068-2-64. Nonoperating test profile exceeds the requirements of MIL-PRF-28800F, Class 3.)

PXI-GPIB

Performance

GPIB	
3-wire	up to 1536 kbytes/s
HS488	up to 7885 kbytes/s

Power Requirements

+5 V	80 mA, Typical 165 mA, Maximum
VIO	3 mA, Typical 10 mA, Maximum

Physical Characteristics

Dimensions	16.0 cm × 10.0 cm (6.3 in. × 3.9 in.), 3U
Connector	
GPIB	IEEE 488 24-pin connector
PXI	32-bit, Universal Signaling

Environment

Operating ambient temperature	0 °C to 55 °C (Tested in accordance with IEC 60068-2-1 and IEC 60068-2-2.)
Operating relative humidity	10% to 90%, noncondensing (Tested in accordance with IEC 60068-2-56.)
Storage ambient temperature	-20 °C to 70 °C (Tested in accordance with IEC 60068-2-1 and IEC 60068-2-2.)
Storage relative humidity	5% to 95%, noncondensing (Tested in accordance with IEC 60068-2-56.)

Shock and Vibration

Shock	
Operating	30 g peak, half-sine, 11 ms pulse (Tested in accordance with IEC 60068-2-27; test profile developed in accordance with MIL-PRF-28800F.)
Random Vibration	
Operating	5 Hz to 500 Hz, 0.3 g_{rms}
Nonoperating	5 Hz to 500 Hz, 2.4 g_{rms} (Tested in accordance with IEC 60068-2-64. Nonoperating test profile exceeds the requirements of MIL-PRF-28800F, Class 3.)

All Devices

Environment

Maximum Altitude	2,000 m (at 25 °C ambient temperature)
Pollution Degree	2
Indoor use only	

Safety

Operate the GPIB controller only as described in the device user documentation.

Caution Do *not* operate the GPIB controller in a manner not specified in the user documentation. Product misuse can result in a hazard. You can compromise the safety protection built into the product if the product is damaged in any way. If the product is damaged, return it to National Instruments for repair.

This product is designed to meet the requirements of the following electrical equipment safety standards for measurement, control, and laboratory use:

- IEC 61010-1, EN 61010-1
- UL 61010-1, CSA C22.2 No. 61010-1

Caution Overloading the circuits may damage supply wiring. Do not exceed the ratings on the equipment nameplate when connecting equipment to the supply circuit.

Note For UL and other safety certifications, refer to the product label or the *Product Certifications and Declarations* section.

Use a dry, low-velocity stream of air to clean the hardware. If needed, use a soft, nonmetallic-bristle brush for cleaning around components.

Electromagnetic Compatibility

This product meets the requirements of the following EMC standards for electrical equipment for measurement, control, and laboratory use:

- EN 61326-1 (IEC 61326-1): Class A emissions; Basic immunity
- EN 55011 (CISPR 11): Group 1, Class A emissions
- EN 55022 (CISPR 22): Class A emissions
- EN 55024 (CISPR 24): Immunity
- AS/NZS CISPR 11: Group 1, Class A emissions
- AS/NZS CISPR 22: Class A emissions
- FCC 47 CFR Part 15B: Class A emissions
- ICES-001: Class A emissions

Note In the United States (per FCC 47 CFR), Class A equipment is intended for use in commercial, light-industrial, and heavy-industrial locations. In Europe, Canada, Australia and New Zealand (per CISPR 11) Class A equipment is intended for use only in heavy-industrial locations.

Note Group 1 equipment (per CISPR 11) is any industrial, scientific, or medical equipment that does not intentionally generate radio frequency energy for the treatment of material or inspection/analysis purposes.

Note For EMC declarations and certifications, and additional information, refer to the *Product Certifications and Declarations* section.

CE Compliance CE

This product meets the essential requirements of applicable European Directives as follows:

- 2014/35/EU; Low-Voltage Directive (safety)
- 2014/30/EU; Electromagnetic Compatibility Directive (EMC)

Product Certifications and Declarations

Refer to the product Declaration of Conformity (DoC) for additional regulatory compliance information. To obtain product certifications and the DoC for this product, visit `ni.com/certification`, search by model number or product line, and click the appropriate link in the Certification column.

Environmental Management

NI is committed to designing and manufacturing products in an environmentally responsible manner. NI recognizes that eliminating certain hazardous substances from our products is beneficial to the environment and to NI customers.

For additional environmental information, refer to the *Minimize Our Environmental Impact* web page at `ni.com/environment`. This page contains the environmental regulations and directives with which NI complies, as well as other environmental information not included in this document.

Waste Electrical and Electronic Equipment (WEEE)

EU Customers At the end of the product life cycle, all NI products must be disposed of according to local laws and regulations. For more information about how to recycle NI products in your region, visit `ni.com/environment/weee`.

电子信息产品污染控制管理办法 （中国 RoHS）

中国客户 National Instruments 符合中国电子信息产品中限制使用某些有害物质指令 (RoHS)。关于 National Instruments 中国 RoHS 合规性信息，请登录 `ni.com/environment/rohs_china`。 (For information about China RoHS compliance, go to `ni.com/environment/rohs_china`.)

Worldwide Support and Services

The NI website is your complete resource for technical support. At ni.com/support you have access to everything from troubleshooting and application development self-help resources to email and phone assistance from NI Application Engineers.

Visit ni.com/services for NI Factory Installation Services, repairs, extended warranty, and other services.

Visit ni.com/register to register your NI product. Product registration facilitates technical support and ensures that you receive important information updates from NI.

A Declaration of Conformity (DoC) is our claim of compliance with the Council of the European Communities using the manufacturer's declaration of conformity. This system affords the user protection for electromagnetic compatibility (EMC) and product safety. You can obtain the DoC for your product by visiting ni.com/certification. If your product supports calibration, you can obtain the calibration certificate for your product at ni.com/calibration.

NI corporate headquarters is located at 11500 North Mopac Expressway, Austin, Texas, 78759-3504. NI also has offices located around the world. For telephone support in the United States, create your service request at ni.com/support or dial 1 866 ASK MYNI (275 6964). For telephone support outside the United States, visit the Worldwide Offices section of ni.com/niglobal to access the branch office websites, which provide up-to-date contact information, support phone numbers, email addresses, and current events.

Information is subject to change without notice. Refer to the *NI Trademarks and Logo Guidelines* at ni.com/trademarks for more information on NI trademarks. Other product and company names mentioned herein are trademarks or trade names of their respective companies. For patents covering NI products/technology, refer to the appropriate location: **Help»Patents** in your software, the patents.txt file on your media, or the *National Instruments Patents Notice* at ni.com/patents. You can find information about end-user license agreements (EULAs) and third-party legal notices in the readme file for your NI product. Refer to the *Export Compliance Information* at ni.com/legal/export-compliance for the NI global trade compliance policy and how to obtain relevant HTS codes, ECCNs, and other import/export data. NI MAKES NO EXPRESS OR IMPLIED WARRANTIES AS TO THE ACCURACY OF THE INFORMATION CONTAINED HEREIN AND SHALL NOT BE LIABLE FOR ANY ERRORS. U.S. Government Customers: The data contained in this manual was developed at private expense and is subject to the applicable limited rights and restricted data rights as set forth in FAR 52.227-14, DFAR 252.227-7014, and DFAR 252.227-7015.

© 2001–2018 National Instruments. All rights reserved.

370426T-01 Jul18