COMPREHENSIVE SERVICES

We offer competitive repair and calibration services, as well as easily accessible documentation and free downloadable resources.

SELL YOUR SURPLUS

We buy new, used, decommissioned, and surplus parts from every NI series. We work out the best solution to suit your individual needs.

- Sell For Cash
- Get Credit
- Receive a Trade-In Deal

OBSOLETE NI HARDWARE IN STOCK & READY TO SHIP

We stock **New, New Surplus, Refurbished,** and **Reconditioned** NI Hardware.

APEX WAVES

Bridging the gap *between the manufacturer and your legacy test system.*

1-800-915-6216

www.apexwaves.com

sales@apexwaves.com

All trademarks, brands, and brand names are the property of their respective owners.

Request a Quote CLICK HERE **sbRIO-9225**

OPERATING INSTRUCTIONS AND SPECIFICATIONS

NI 9225E

3-Channel, 300 V_{rms}, 24-Bit, Simultaneous, Channel-to-Channel Isolated Analog Input Module

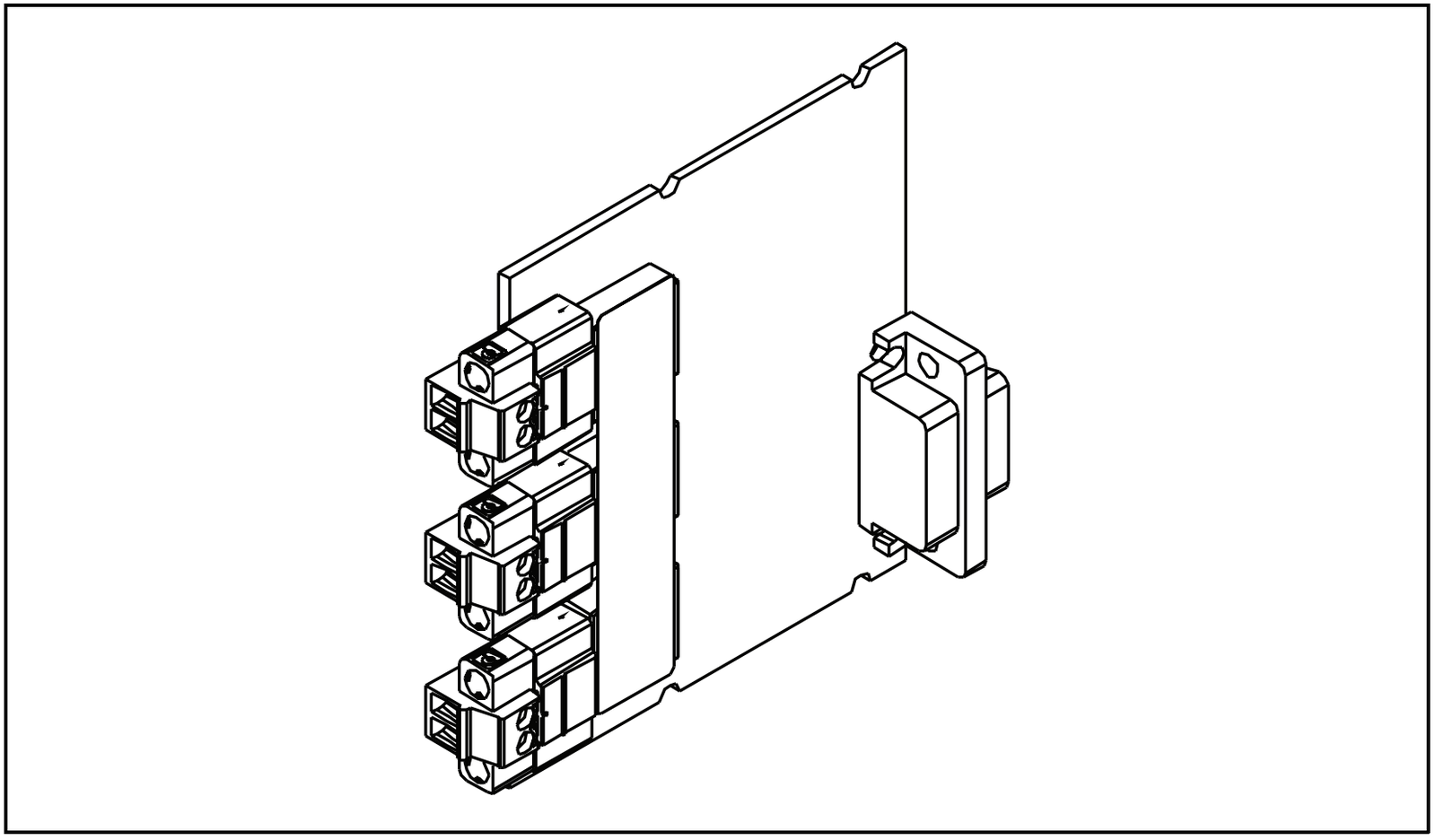

NATIONAL INSTRUMENTS™

This document describes how to use the National Instruments 9225E and includes dimensions, terminal assignments, and specifications for the NI 9225E. Visit `ni.com/info` and enter `rdsoftwareversion` to determine which software you need for the modules you are using. For information about installing, configuring, and programming the system, refer to the system documentation. Visit `ni.com/info` and enter `cseriesdoc` for information about C Series documentation.

Caution National Instruments makes no electromagnetic compatibility (EMC) or CE marking compliance claims for the NI 9225E. The end-product supplier is responsible for conformity to any and all compliance requirements.

Caution The NI 9225E must be installed inside a suitable enclosure prior to use. Hazardous voltages may be present.

NI 9225E Dimensions

The following figure shows the dimensions of the NI 9225E.

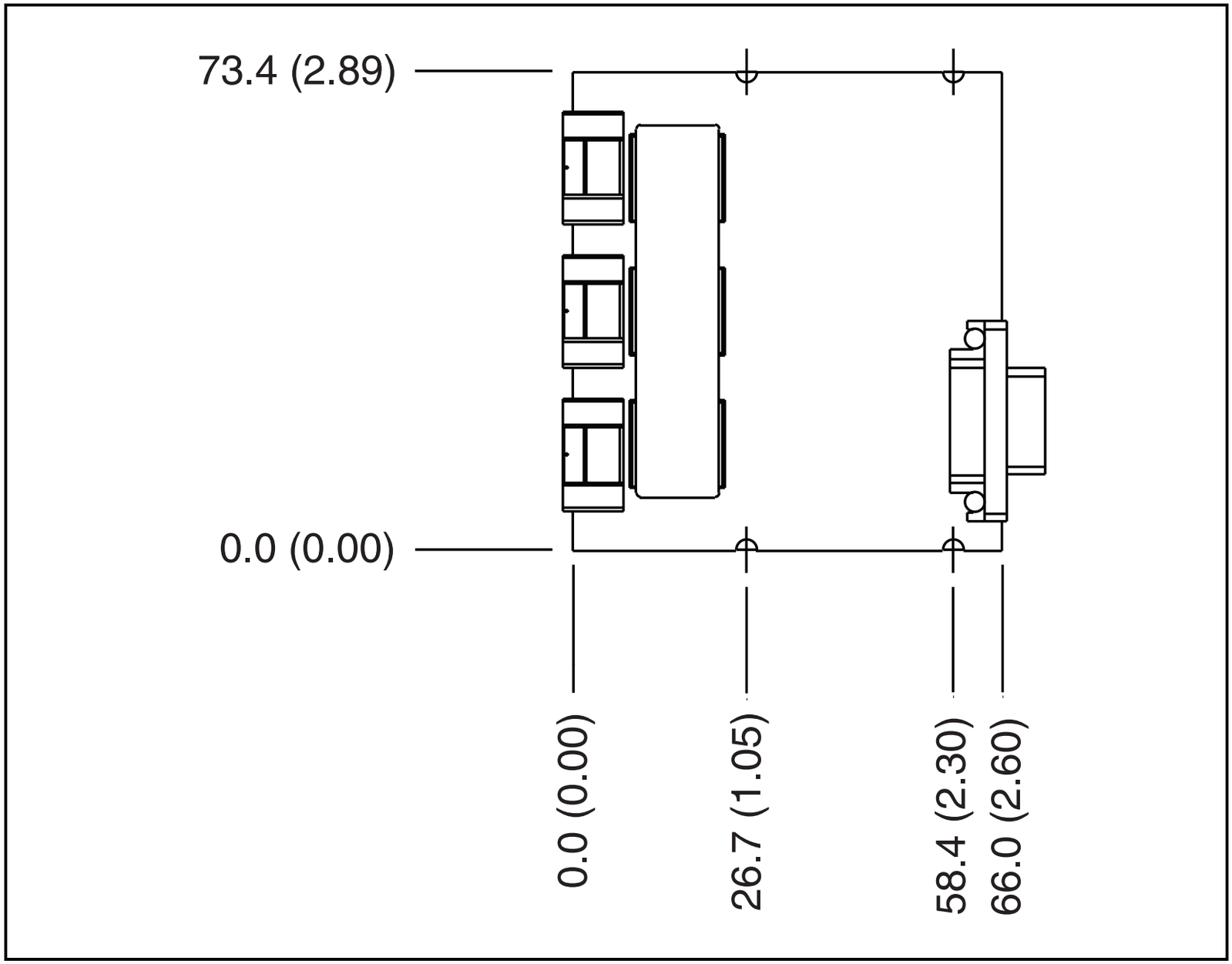

Figure 1. NI 9225E Dimensions in Millimeters (Inches)

Connecting the NI 9225E

The NI 9225E has three 2-terminal detachable screw-terminal connectors that provide connections for three simultaneously sampled, isolated analog input channels.

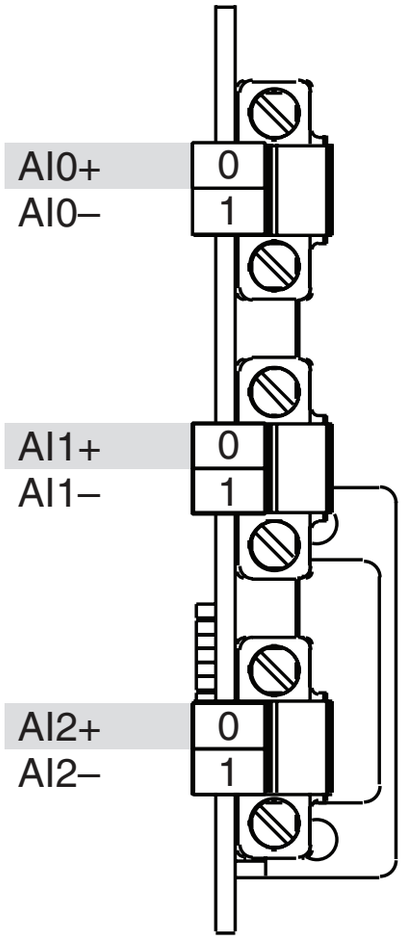

Figure 2. NI 9225E Terminal Assignments

You can connect ground-referenced or floating signal sources to the NI 9225E. Connect the positive signal of the signal source to the AI+ terminal, and connect the negative signal of the signal source to the AI– terminal. If you make a ground-referenced connection between the signal source and the NI 9225E, make sure the voltage on the AI+ and AI– connections are in the channel-to-earth safety voltage range to ensure proper operation of the NI 9225E. Refer to the *Specifications* section for more information about operating voltages and overvoltage protection.

Note You must use 2-wire ferrules to create a secure connection when connecting more than one wire to a single terminal on the NI 9225E.

Refer to Figures 3 and 4 for illustrations of how to connect grounded and floating signal sources to the NI 9225E.

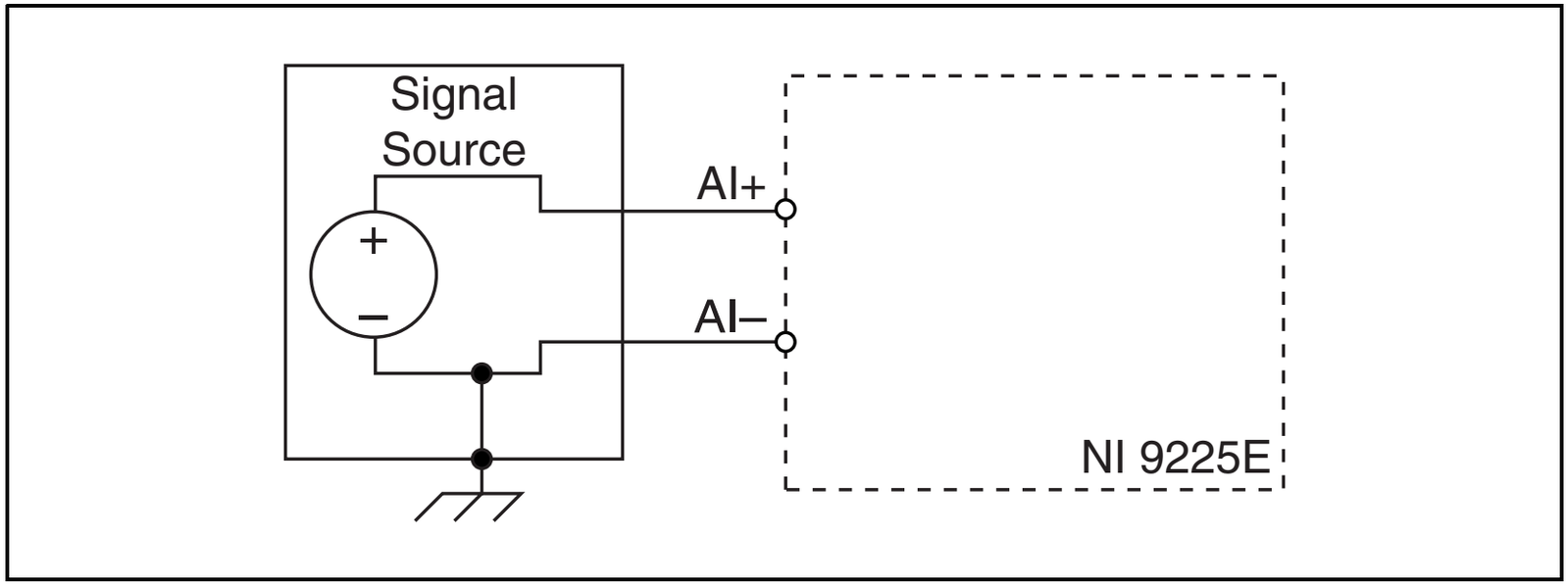

Figure 3. Connecting a Grounded Signal Source to the NI 9225E

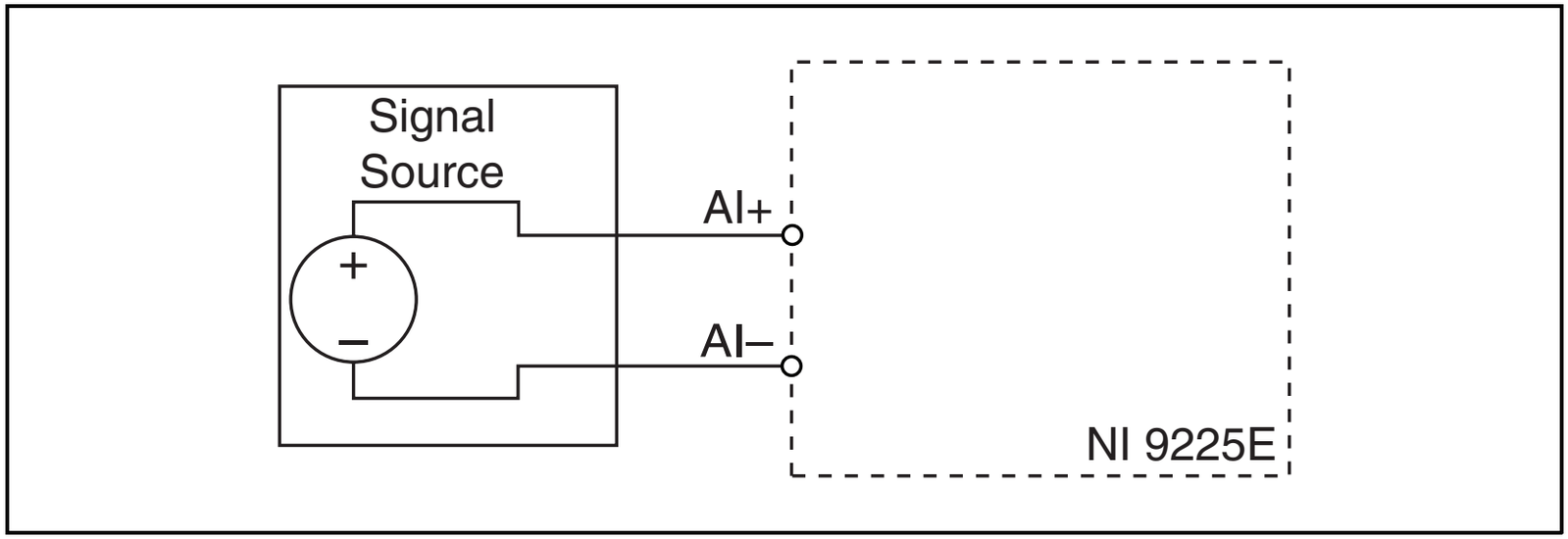

Figure 4. Connecting a Floating Signal Source to the NI 9225E

The NI 9225E analog input channels are floating with respect to earth ground and each other. The incoming analog signal on each channel is conditioned, buffered, and then sampled by a 24-bit Delta-Sigma ADC.

Each channel provides an independent signal path and ADC, enabling you to sample all three channels simultaneously. Refer to Figure 5 for an illustration of the circuitry for one channel of the NI 9225E.

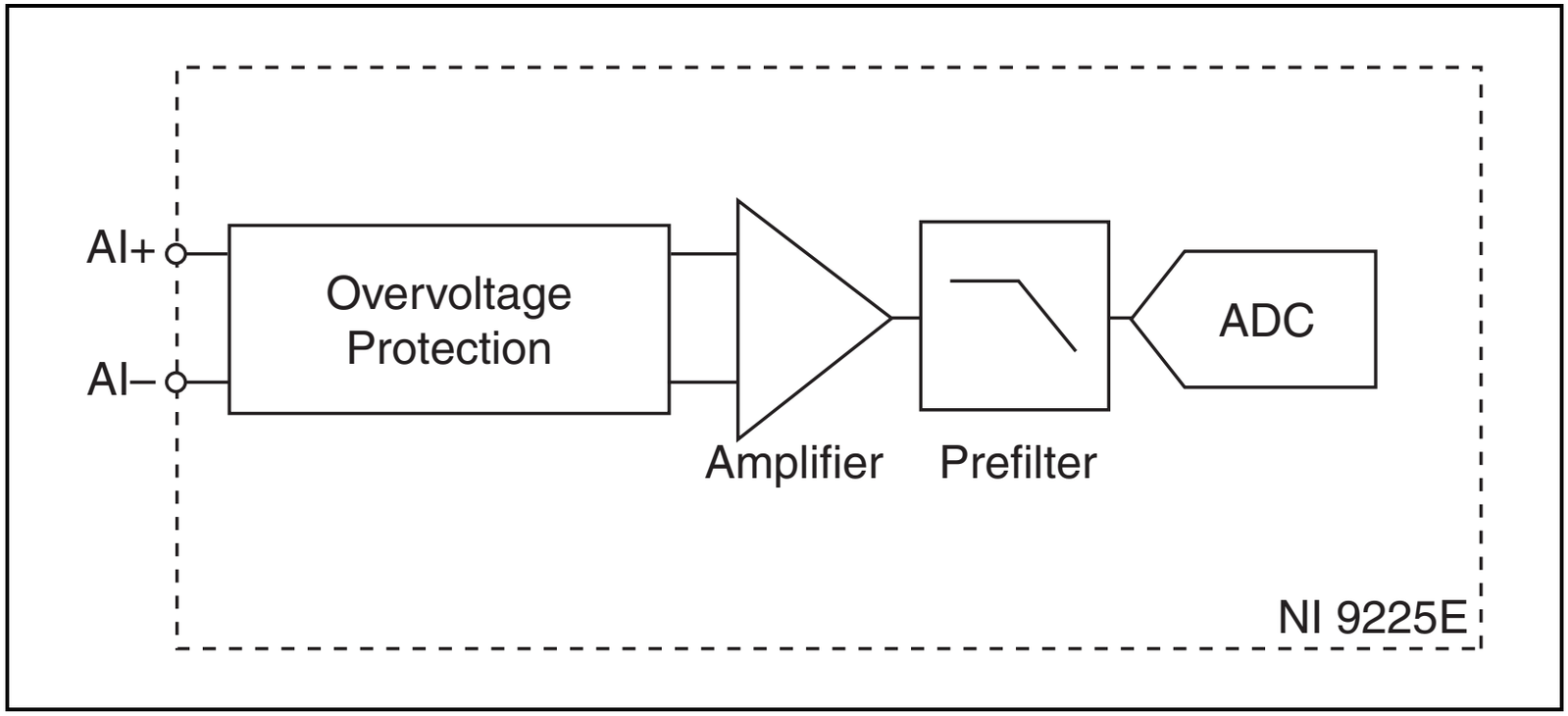

Figure 5. Input Circuitry for One Channel of the NI 9225E

Understanding NI 9225E Filtering

The NI 9225E uses a combination of analog and digital filtering to provide an accurate representation of in-band signals while rejecting out-of-band signals. The filters discriminate between signals based on the frequency range, or bandwidth, of the signal. The three important bandwidths to consider are the passband, the stopband, and the alias-free bandwidth.

The NI 9225E represents signals within the passband, as quantified primarily by passband flatness and phase nonlinearity. All signals that appear in the alias-free bandwidth are either unaliased signals or signals that have been filtered by at least the amount of the stopband rejection.

Passband

The signals within the passband have frequency-dependent gain or attenuation. The small amount of variation in gain with respect to frequency is called the passband flatness. The digital filters of the NI 9225E adjust the frequency range of the passband to match the data rate. Therefore, the amount of gain or attenuation at a given frequency depends on the data rate. Figure 6 shows typical passband flatness for the NI 9225E.

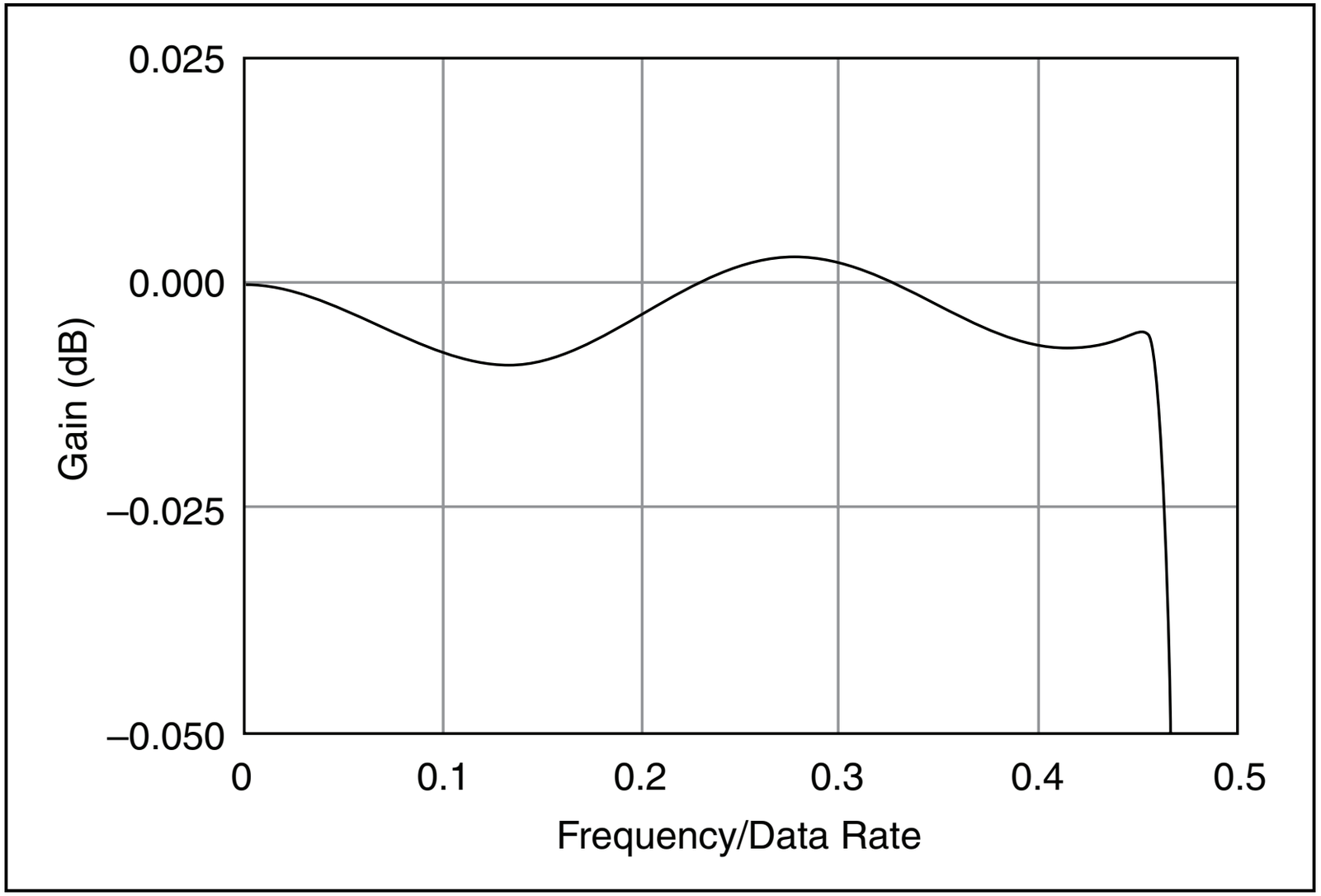

Figure 6. Typical Passband Response of the NI 9225E

Stopband

The filter significantly attenuates all signals above the stopband frequency. The primary goal of the filter is to prevent aliasing. Therefore, the stopband frequency scales precisely with the data rate. The stopband rejection is the minimum amount of attenuation applied by the filter to all signals with frequencies within the stopband.

Alias-Free Bandwidth

Any signal that appears in the alias-free bandwidth of the NI 9225E is not an aliased artifact of signals at a higher frequency. The alias-free bandwidth is defined by the ability of the filter to reject frequencies above the stopband frequency and equals the data rate minus the stopband frequency.

Understanding NI 9225E Data Rates

The frequency of a master timebase (f_M) controls the data rate (f_s) of the NI 9225E. The NI 9225E includes an internal master timebase with a frequency of 12.8 MHz, but the module also can accept an external master timebase or export its own master timebase. To synchronize the data rate of an NI 9225E with other modules that use master timebases to control sampling, all of the

modules must share a single master timebase source. Refer to the software help for information about configuring the master timebase source for the NI 9225E. Visit `ni.com/info` and enter `cseriesdoc` for information about C Series documentation.

The following equation provides the available data rates of the NI 9225E:

$$f_s = \frac{f_M \div 256}{n}$$

where n is any integer from 1 to 31.

However, the data rate must remain within the appropriate data rate range. Refer to the *Specifications* section for more information about the data rate range. When using the internal master timebase of 12.8 MHz, the result is data rates of 50 kS/s, 25 kS/s, 16.667 kS/s, and so on down to 1.613 kS/s, depending on the value of n. When using an external timebase with a frequency other than 12.8 MHz, the NI 9225E has a different set of data rates.

Note The cRIO-9151 R Series Expansion chassis does not support sharing timebases between modules.

Sleep Mode

This module supports a low-power sleep mode. Support for sleep mode at the system level depends on the chassis that the module is plugged into. Refer to the chassis manual for information about support for sleep mode. If the chassis supports sleep mode, refer to the software help for information about enabling sleep mode. Visit `ni.com/info` and enter `cseriesdoc` for information about C Series documentation.

Typically, when a system is in sleep mode, you cannot communicate with the modules. In sleep mode, the system consumes minimal power and may dissipate less heat than it does in normal mode. Refer to the *Specifications* section for more information about power consumption and thermal dissipation.

Specifications

The following specifications are typical for the range –40 to 85 °C unless otherwise noted. All voltages are relative to the AI– signal on each channel unless otherwise noted.

Input Characteristics

Number of channels ..... 3 analog input channels

ADC resolution ..... 24 bits

Type of ADC ..... Delta-Sigma (with analog prefiltering)

Sampling mode ..... Simultaneous

Internal master timebase (f_M)

- Frequency ..... 12.8 MHz
- Accuracy ..... ±100 ppm max

Data rate range (f_s) using internal master timebase

- Minimum ..... 1.613 kS/s
- Maximum ..... 50 kS/s

Data rate range (f_s) using external master timebase

Minimum ..... 390.6 S/s

Maximum ..... 51.2 kS/s

Data rates[1] (f_s) ..... $\frac{f_M \div 256}{n}$, $n = 1, 2, ..., 31$

Operating voltage ranges

Minimum ..... 294 V_{rms}

Typical ..... 300 V_{rms}

Typical scaling coefficient ..... 50.66 µV/LSB

Overvoltage protection ..... ±450 VDC

Input coupling ..... DC

Input impedance (AI+ to AI–) ..... 1 MΩ

---

[1] The data rate must remain within the appropriate data rate range. Refer to the *Understanding NI 9225E Data Rates* section for more information.

Accuracy

Measurement Conditions	Percent of Reading (Gain Error)	Percent of Range* (Offset Error)
Calibrated max (–40 to 70 °C)	±0.23%	±0.05%
Calibrated typ (25 °C, ±5 °C)	±0.05%	±0.008%
Calibrated max (25 °C, ±15 °C)	±0.084%	±0.016%
Uncalibrated max (–40 to 70 °C)	±1.6%	±0.66%
Uncalibrated typ (25 °C, ±5 °C)	±0.4%	±0.09%
* Range equals 425 V.		

Input noise ..... 2 mV_{rms}

Stability

Gain drift ..... ±10 ppm/°C

Offset drift ..... ±970 µV/°C

Post calibration gain match
(ch-to-ch, 20 kHz)..... ±0.25 dB max

Crosstalk (60 Hz) ..... –130 dB

Phase match

Ch-to-ch, max ..... 0.035°/kHz

Module-to-module, max ..... 0.035°/kHz + 360° · f_{in}/f_M

Phase linearity (f_s = 50 kS/s) ..... 0.22° max

Input delay ..... 38.4/f_s + 3 µs

Passband

Frequency ..... 0.453 · f_s

Flatness (f_s = 50 kS/s) ..... ±100 mdB max

Stopband

Frequency ..... 0.547 · f_s

Rejection..... –100 dB

Alias-free bandwidth ..... 0.453 · f_s

–3 dB bandwidth (f_s = 50 kS/s) ..... 24.56 kHz

CMRR (f_{in} = 60 Hz)..... –104 dB

SFDR (1 kHz, –60 dB) ..... –128 dB

Total Harmonic Distortion (THD)
(1 kHz, –20 dB) ..... –95 dB

MTBF ..... 301,606 hours at 25 °C; Bellcore Issue 2, Method 1, Case 3, Limited Part Stress Method

Note Contact NI for Bellcore MTBF specifications at other temperatures or for MIL-HDBK-217F specifications.

Power Requirements

Power consumption from chassis

Active mode ..... 495 mW max

Sleep mode ..... 25 µW max

Thermal dissipation (at 70 °C)

Active mode ..... 760 mW max

Sleep mode ..... 265 mW max

Physical Characteristics

If you need to clean the module, wipe it with a dry towel.

Screw-terminal wiring ..... 16 to 28 AWG copper conductor wire with 7 mm (0.28 in.) of insulation stripped from the end

Torque for screw terminals ..... 0.22 to 0.25 N · m (1.95 to 2.21 lb · in.)

Ferrules ..... 0.25 mm^2 to 0.5 mm^2

Weight..... 43 g (1.5 oz)

Safety

Maximum Voltage

Connect only voltages that are within the following limits.

AI+ to AI– ..... 300 V_{rms} max

Isolation Voltages

Channel-to-channel

Continuous ..... 600 V_{rms}, Measurement Category II, (Basic insulation)

Withstand..... 2,300 V_{rms}, verified by a 5 s dielectric withstand test

Channel-to-earth ground

Continuous ..... 300 V_{rms}, Measurement Category II, (Double insulation)

Withstand..... 2,300 V_{rms}, verified by a 5 s dielectric withstand test

Measurement Category II is for measurements performed on circuits directly connected to the electrical distribution system. This category refers to local-level electrical distribution, such as that provided by a standard wall outlet, for example, 115 V for U.S. or 230 V for Europe.

Caution Do *not* connect the NI 9225E to signals or use for measurements within Measurement Categories III or IV.

Safety Standards

This product meets the requirements of the following standards of safety for electrical equipment for measurement, control, and laboratory use when installed in a suitable enclosure:

- IEC 61010-1, EN 61010-1
- UL 61010-1, CSA 61010-1

Note For UL and other safety certifications, refer to the product label or the *Online Product Certification* section.

Online Product Certification

Refer to the product Declaration of Conformity (DoC) for additional regulatory compliance information. To obtain product certifications and the DoC for this product, visit `ni.com/certification`, search by module number or product line, and click the appropriate link in the Certification column.

Environmental

National Instruments C Series modules are intended for indoor use only but may be used outdoors if installed in a suitable enclosure. Refer to the manual for the chassis you are using for more information about meeting these specifications.

Operating temperature
(IEC 60068-2-1, IEC 60068-2-2) .....–40 to 85 °C

Storage temperature
(IEC 60068-2-1, IEC 60068-2-2) .....–40 to 85 °C

Operating humidity
(IEC 60068-2-56)..... 10 to 90% RH, noncondensing

Storage humidity
(IEC 60068-2-56).....5 to 95% RH, noncondensing

Maximum altitude.....2,000 m

Pollution Degree (IEC 60664) 2

Environmental Management

NI is committed to designing and manufacturing products in an environmentally responsible manner. NI recognizes that eliminating certain hazardous substances from our products is beneficial to the environment and to NI customers.

For additional environmental information, refer to the *NI and the Environment* Web page at `ni.com/environment`. This page contains the environmental regulations and directives with which NI complies, as well as other environmental information not included in this document.

Waste Electrical and Electronic Equipment (WEEE)

EU Customers At the end of the life cycle, all products *must* be sent to a WEEE recycling center. For more information about WEEE recycling centers and National Instruments WEEE initiatives, visit `ni.com/environment/weee`.

电子信息产品污染控制管理办法 （中国 RoHS）

中国客户 National Instruments 符合中国电子信息产品中限制使用某些有害物质指令 (RoHS)。关于 National Instruments 中国 RoHS 合规性信息，请登录 `ni.com/environment/rohs_china`。(For information about China RoHS compliance, go to `ni.com/environment/rohs_china`.)

Calibration

You can obtain the calibration certificate and information about calibration services for the NI 9225E at `ni.com/calibration`.

Calibration interval ..... 1 year

Where to Go for Support

The National Instruments Web site is your complete resource for technical support. At `ni.com/support` you have access to everything from troubleshooting and application development self-help resources to email and phone assistance from NI Application Engineers.

National Instruments corporate headquarters is located at 11500 North Mopac Expressway, Austin, Texas, 78759-3504. National Instruments also has offices located around the world to help address your support needs. For telephone support in the United States, create your service request at `ni.com/support` and follow the calling instructions or dial 512 795 8248. For telephone support outside the United States, contact your local branch office:

Australia 1800 300 800, Austria 43 662 457990-0,
Belgium 32 (0) 2 757 0020, Brazil 55 11 3262 3599,
Canada 800 433 3488, China 86 21 5050 9800,
Czech Republic 420 224 235 774, Denmark 45 45 76 26 00,
Finland 358 (0) 9 725 72511, France 01 57 66 24 24,
Germany 49 89 7413130, India 91 80 41190000,
Israel 972 3 6393737, Italy 39 02 41309277, Japan 0120-527196,

Korea 82 02 3451 3400, Lebanon 961 (0) 1 33 28 28,
Malaysia 1800 887710, Mexico 01 800 010 0793,
Netherlands 31 (0) 348 433 466, New Zealand 0800 553 322,
Norway 47 (0) 66 90 76 60, Poland 48 22 3390150,
Portugal 351 210 311 210, Russia 7 495 783 6851,
Singapore 1800 226 5886, Slovenia 386 3 425 42 00,
South Africa 27 0 11 805 8197, Spain 34 91 640 0085,
Sweden 46 (0) 8 587 895 00, Switzerland 41 56 2005151,
Taiwan 886 02 2377 2222, Thailand 662 278 6777,
Turkey 90 212 279 3031, United Kingdom 44 (0) 1635 523545

National Instruments, NI, ni.com, and LabVIEW are trademarks of National Instruments Corporation. Refer to the *Terms of Use* section on `ni.com/legal` for more information about National Instruments trademarks. Other product and company names mentioned herein are trademarks or trade names of their respective companies.
For patents covering National Instruments products, refer to the appropriate location: **Help»Patents** in your software, the `patents.txt` file on your media, or `ni.com/patents`.

© 2008 National Instruments Corp. All rights reserved.

372618A-01 Jul08