INSTALLATION GUIDE

TBX-68S Isothermal Terminal Block

このドキュメントには、日本語ページも含まれています。

This installation guide describes how to install and connect signals to the TBX-68S isothermal terminal block for use with the NI 2501 and NI 2503 PXI switch cards.

Contents

Introduction

The TBX-68S is an isothermal DIN-rail mountable terminal block that consists of a shielded board with screw terminals that connect directly to the front panel I/O connector of the NI 2501 or NI 2503.

The terminals blocks can easily accommodate thermocouples, resistance temperature detectors (RTDs), thermistors, and voltage signals. The terminal blocks feature isothermal construction to minimize the temperature gradients across the screw terminals and a high-accuracy thermistor cold-junction temperature sensor for measuring with thermocouples. Enclosures keep out air currents to maintain an isothermal environment for the screw terminals and the cold-junction sensor. The TBX-68S mounts on most European standard DIN EN mounting rails.

The TBX-68S provides screw terminal connections to all channels except the cold-junction sensor.

NATIONAL INSTRUMENTS™

What You Need to Get Started

You need the following to set up and use your terminal block:

- ❑ One of the following PXI switch cards:
  - – NI 2501
  - – NI 2503
- ❑ *NI 2501/2503 User Manual*
- ❑ *TBX-68S Isothermal Terminal Block Installation Guide*
- ❑ TBX-68S isothermal terminal block
- ❑ One of the following cable assemblies:
  - – SH6868S shielded cable (recommended)
  - – R6868 ribbon cable
- ❑ 1/8 in. flathead screwdriver
- ❑ No. 1 Phillips-head screwdriver
- ❑ Wire cutters
- ❑ Wire insulation strippers

Signal Connection

See your *NI 2501/2503 User Manual* for examples of how to connect your signals. Refer to Figure 1 as you perform the following steps to connect your signals to your terminal block:

1. Remove the terminal block cover by unscrewing the four cover screws in the cover corners using the Phillips-head screwdriver.
2. Use wire cutters and wire insulation strippers to strip the wire ends as necessary to connect them to screw terminals.
3. Loosen the screws in the screw terminals with a 1/8 in. flathead screwdriver.
4. Insert the stripped wires into the screw terminals. Tighten the screws with the 1/8 in. flathead screwdriver.
5. Allow your signal wires to exit through the terminal block cover opening.

Note The TBX-68S terminal block does not provide strain relief for signal wires. Add strain relief and insulation for your signal wires, if necessary.

6. Replace the terminal block cover and tighten the cover screws.

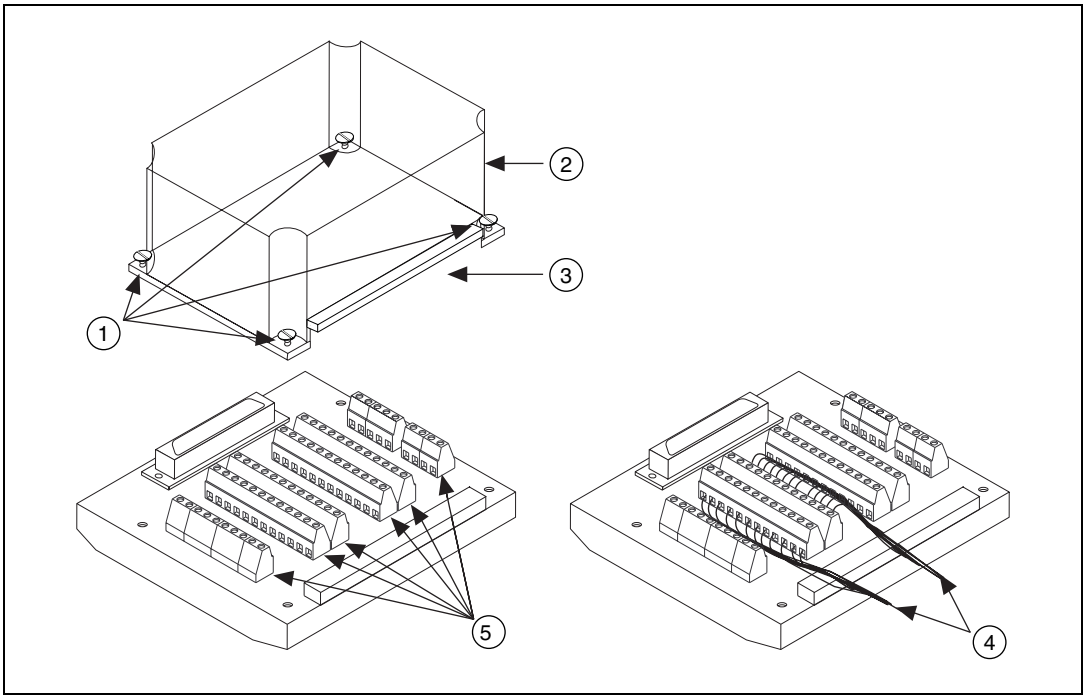

1	Cover Screws	3	Cover Opening	5	Screw Terminals
2	Cover	4	Signal Wires		

Figure 1. TBX-68S Parts Locator Diagram

Installing Your Terminal Block

Note To minimize the temperature gradient inside the terminal block and thus maintain its isothermal nature for accurate cold-junction compensation, place the terminal block away from extreme temperature differentials.

Refer to Figure 2 as you perform the following steps to connect the terminal block to the NI 2501 or NI 2503 connector:

1. Attach the connector on one end of the cable to the NI 2501 or NI 2503 connector. The two connectors should snap together in place.
2. Attach the connector on the other end of the cable to the terminal block connector. If you use the SH6868S cable, the two connectors should snap together. The R6868 ribbon cable has no latches and should simply join together without a snap.

To disconnect the cable, push the two ejector ears on the backshell of the cable and gently pull on the backshell. Do *not* pull the cable.

Caution The connectors of both the switch card and the cable are polarized. You can attach them in only one way. Do not force the cable when inserting it into or removing it from the NI 2501 or NI 2503 connector.

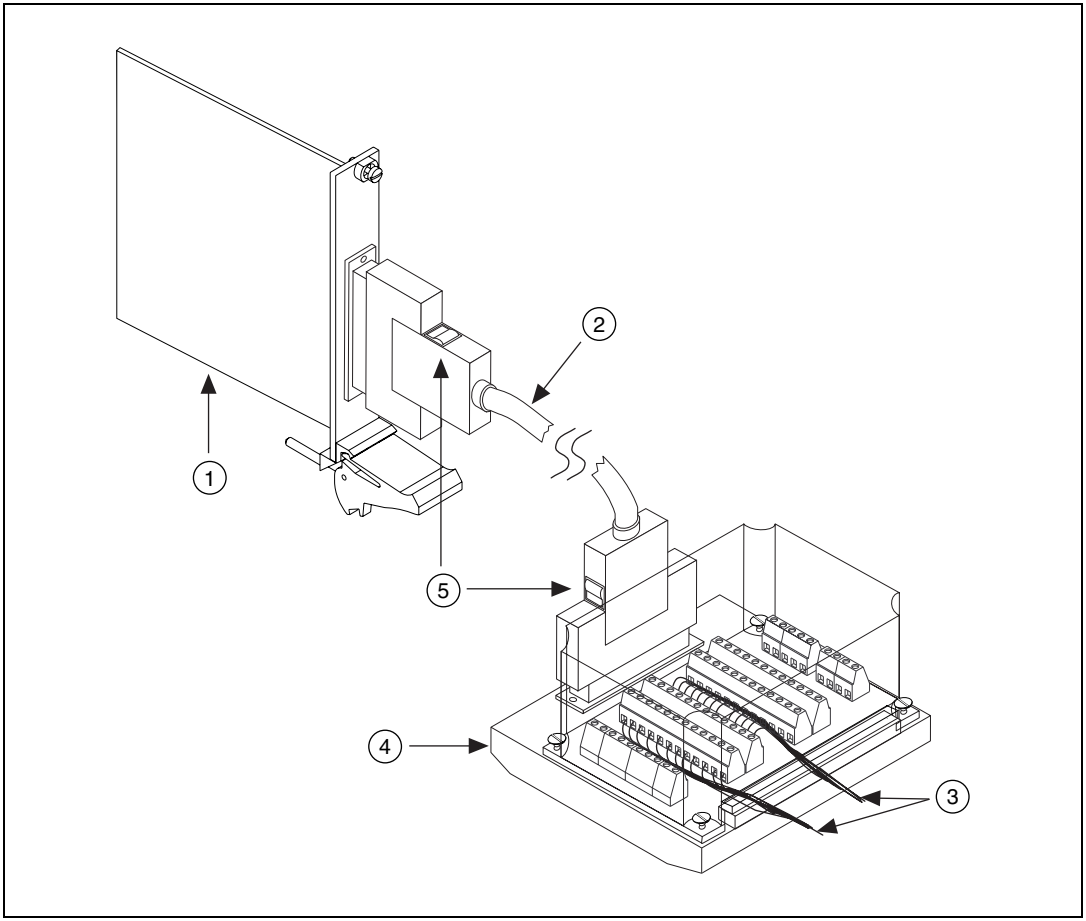

1	NI 2501 or NI 2503	3	Signal Wires
2	SH6868S Shielded Cable (shown) or R6868 Ribbon Cable	4	TBX-68S
		5	Ejector Ears

Figure 2. Connecting the TBX-68S Cable Assembly

Rack-Mounting the TBX-68S

When you have completed signal connections and terminal block installation, you can mount the TBX-68S assembly into your rack. If you are using the National Instruments TBX Rack-Mount Assembly, refer to the *TBX Rack-Mount Installation Guide* for instructions.

If you are not using this rack-mount assembly, mount the TBX-68S directly by snapping its base onto the DIN rail with a firm push.

To remove the TBX-68S from the DIN rail, place a flathead screwdriver into the slot above the terminal block base and pry it away from the rail.

Cold-Junction Temperature Sensor

The TBX-68S temperature sensor voltage output varies from 198.54 mV to 19.58 mV over the temperature range 0° to 55° C, respectively, and has an accuracy of ±0.5° C over the 15° to 35° C temperature range and ±0.9° C over the 0° to 15° and 35° to 55° C temperature ranges.[1]

You can use the following formulas to convert the cold-junction sensor voltage to cold-junction temperature:

$$T(°\,C) = T_K - 273.15$$

where T_K is the temperature in kelvin

$$r_K = \frac{1}{[a + b(\ln R_T) + c(\ln R_T)^3}$$

a = 1.295361 x 10^{-3}
b = 2.343159 x 10^{-4}
c = 1.018703 x 10^{-7}
R_T = resistance of the thermistor

$$R_T = 189K\left(\frac{V_{TEMPOUT}}{2.5 - V_{TEMPOUT}}\right)$$

$V_{TEMPOUT}$ = output voltage of the temperature sensor

$$T(°F) = \frac{[T(°C)]9}{5} + 32$$

[1] Includes the combined effects of the temperature sensor accuracy and temperature difference between the temperature sensor and any screw terminal. The temperature sensor accuracy includes tolerances in all component values, the effects caused by temperature and loading, and self-heating.

where T(°F) and T(°C) are the temperature readings in degrees Fahrenheit and degrees Celsius, respectively.

The thermistor resistance varies from 16,305 Ω to 1,492 Ω over a 0° to 55° C temperature range.

Note $V_{TEMPOUT}$ varies from 198.54 mV (at 0° C) to 19.58 mV (at 55° C). For best resolution, use the maximum gain for this signal range on the analog input channel of your measurement device.

The 200 mV range is designed to eliminate the necessity of changing a measurement device's signal range to measure the cold-junction sensor while scanning thermocouples.

Use an average of a large number of samples to obtain the most accurate reading. Noisy environments require more samples for greater accuracy.

Figure 3 shows the circuit diagram of the TBX-68S cold-junction temperature sensor.

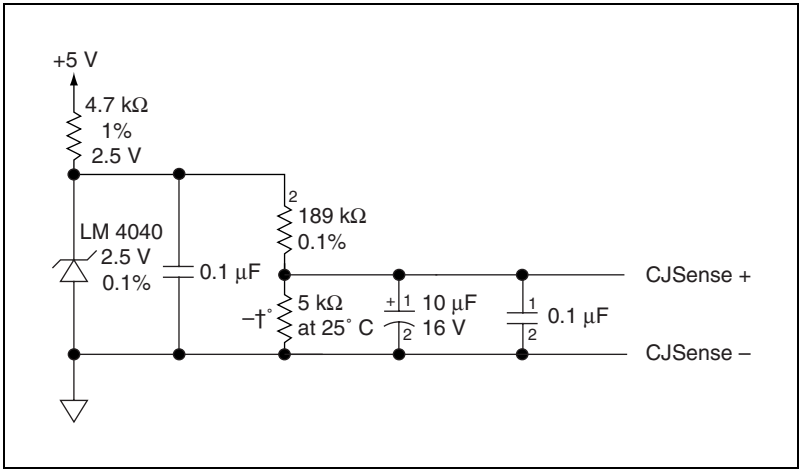

Figure 3. Temperature Sensor Circuit Diagram

Specifications

Cold-junction sensor

Accuracy[1] ..... 0.5° from 15° to 35° C
0.9° from 0° to 15° C
and 35° to 55° C

Repeatability ..... 0.2° from 15° to 35° C

Output ..... 198.54 mV to 19.58 mV
from 0° to 55° C

Compatible DIN rails ..... DIN EN 50 022
DIN EN 50 035

Dimensions..... 12.7 by 11.2 by 7.62 cm
(5.0 by 4.4 by 3.0 in.)

Max voltage
(signal + common mode) ..... Each input should remain within 30 V_{rms} or 60 VDC of ground and all other channels to eliminate the possibility of hazardous shock

[1] Includes the combined effects of the temperature sensor accuracy and the temperature difference between the temperature sensor and any screw terminal. The temperature sensor accuracy includes tolerances in all component values, the effects caused by temperature and loading, and self-heating.

372262B Nov07